Jones Gillam Renz Architects

Address
730 N 9th St.
Salina, KS 67401

1881 Main St., Suite 301
Kansas City, MO 64108

Contact
jgr@jgrarchitects.com
(785) 827-0386

Web
jgrarchitects.com

ARCHITECT'S SUPPLEMENTAL INSTRUCTIONS

JONES GILLAM RENZ DOCUMENT JGR 710

PROJECT:	**The Reserves at Cobalt Circle** New Development Brownsville, TN	**Report No.**	**Twelve (12)**
OWNER:	**OPG Cobalt Circle Partners, LLC** Dan Maximuk 250 N. Santa Fe Ave, Suite A Salina, KS 67401	**Date**	**March 6, 2026**
		Architect's Proj No.	**24-3446**
CONTRACTOR:	**MCP Group** 3501 SW Fairlawn Rd. Topeka, KS 66614	**Contract For:**	General Construction Mechanical, Electrical

The work shall be carried out in accordance with the following supplemental instructions issued in accordance with the Contract Documents without change in Contract Sum or Contract Time. Prior to proceeding in accordance with these instructions, indicate your acceptance of these instructions for minor change to the Work as consistent with the Contract Documents and return a copy to the Architect.

DESCRIPTION:

Contractor to make adjustments as needed and required per the modifications as indicated on attached drawings and in the below descriptions:

1. The Fire Sprinkler Design Intent Drawings are being issued as part of the design documents. This includes sheets DS.1, DS.2 and DS.3. Cover sheet/index has also been revised to reflect this.
2. Attached are the State Fire Marshal's approval letters and stamped documents pertaining to the Above-ground Fire Sprinkler system, products and calculations. Contractors to consider these are reviewed and approved by the design team, along with the AHJ.

Attachments:

1. Architectural revised Cover Sheet
2. Added design sheets: DS.1, DS.2 & DS.3
3. SFMO Approval Letter for Design Intent Drawings for Bldg A, Bldg B and Bldg C
4. SFMO Approval Letter with approved sheets Cover Sheet, DS.1, DS.2 and DS.3
5. SFMO Approval Letter with approved Fire Sprinkler Shop Drawings, Product Specs and Calculations

Issued by: Jones Gillam Renz Architects PO Box 2928, Salina, KS 67402
Maggie Gillam, Project Manager 785-827-0386 mgillam@jgrarchitects.com

Copies to:

MCP Group – Mike Maas, Cliff Holland, Tim Johnson, Kelli Meiers
OPG - Dan Maximuk, Amanda Klaus, Austin Kack
JGR Team - Maggie Gillam (JGR), Ryan Lies (LST), Cindy Senecal (McClure), Wesley Wooldridge (Renaissance), Michael Boerst (Heartland Energy)

THE RESERVES AT COBALT CIRCLE

NEW APARTMENTS

BROWNSVILLE, **24-3446** **TENNESSEE**

JonesGillamRenz

730 N. Ninth St.
Salina, KS 67401
785.827.0386

1881 Main St, Ste 301
Kansas City, MO 64108
jgr@jgrarchitects.com

MARGARET J. GILLAM
REGISTERED ARCHITECT
ASSOCIATE
No. 107366
COMMERCE
STATE OF TENNESSEE
3-5-2026

ASI 12

CONSULTANTS

Civil Engineer

Renaissance Group
9700 Village Circle, Suite 100
Lakeland, TN 38002
(901) 332-5533
wwooldridge@rgroup.biz

Mechanical & Electrical Engineer

LST Consulting Engineers, PA
4809 Vue Du Lac Place, Suite 301
Manhattan, KS 66503
(785) 587-8042
mail@LSTengineers.com

Structural Engineer

McClure Engineering Co.
2001 W. Broadway
Columbia, MO 65203
(573) 814-1568

ASI 4

TENNESSEE STATE FIRE MARSHAL ADOPTED CODES

2021 INTERNATIONAL BUILDING CODE
2021 FUEL GAS CODE
2021 INTERNATIONAL MECHANICAL CODE
2021 INTERNATIONAL PLUMBING CODE
2021 INTERNATIONAL FIRE CODE
2021 INTERNATIONAL ENERGY CONSERVATION CODE
2021 NFPA LIFE SAFETY CODE
2017 NATIONAL ELECTRIC CODE
FAIR HOUSING ACT DESIGN MANUAL
2010 ADA STANDARDS FOR ACCESSIBLE DESIGN
2017 ICC A117.1 ACCESSIBLE & USABLE BUILDINGS and FACILITIES

CITY OF BROWNSVILLE, TN ADOPTED CODES

2018 INTERNATIONAL BUILDING CODE
2018 INTERNATIONAL MECHANICAL CODE
2018 INTERNATIONAL PLUMBING CODE
2017 NATIONAL ELECTRIC CODE
2018 INTERNATIONAL FIRE CODE
2021 INTERNATIONAL ENERGY CONSERVATION CODE
FAIR HOUSING ACT DESIGN MANUAL
2010 ADA STANDARDS FOR ACCESSIBLE DESIGN
2009 ICC A117.1 ACCESSIBLE & USABLE BUILDINGS and FACILITIES

NOTE: CODE FOOT PRINT AND LIFE SAFETY PLANS ARE FOLLOWING ON SHEETS CFP1 AND CFP2. UNLESS NOTED OTHERWISE (WITH AN *), THE PLANS AND DESIGNS FOLLOW THE MORE STRINGENT OF THE CODES AS LISTED ABOVE. THUS, THE DESIGNS FOLLOW THE 2021 CODES AS LISTED UNDER THE STATE FIRE MARSHAL. ON RARE OCCASSION, THE DESIGNS MAY FOLLOW THE 2018 CODES AS LISTED UNDER BROWNSVILLE. THESE INSTANCES WILL BE NOTED AS SUCH.

REFERENCE LEGEND

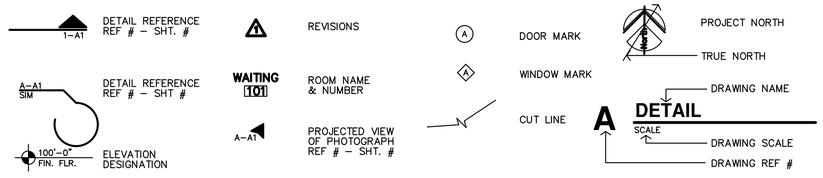

SHEET INDEX

GENERAL

COVER & SHEET INDEX
CFP1 CODE FOOTPRINT
CFP2 CODE FOOTPRINT ASI 5
CFP3 CODE FOOTPRINT
ADA ADA DIAGRAMS
FH FAIR HOUSING
ANSI1 ANSI ACCESSIBILITY STANDARDS
ANSI2 ANSI ACCESSIBILITY STANDARDS
ANSI3 ANSI ACCESSIBILITY STANDARDS

ARCHITECTURAL

A1.1 SITE PLAN
A1.2 ENLARGED PLANS & DETAILS
A1.3 ENLARGED PLANS & DETAILS
A1.4 ENLARGED PLANS & DETAILS
A1.5 ENLARGED PLANS & DETAILS
A2.1 BUILDING A & CLUBHOUSE FLOOR PLANS
A2.2B BUILDING B FLOOR PLANS
A2.2C BUILDING C FLOOR PLANS ASI 5
A2.3 1–BEDROOM UNIT PLANS
A2.4 2–BEDROOM UNIT PLANS
A2.5 3–BEDROOM UNIT PLANS
A2.6 ACCESSIBLE 1–BEDROOM ENLARGED BATH PLANS & INTERIOR ELEVATIONS
A2.7 ACCESSIBLE 2/3–BEDROOM ENLARGED BATH PLANS & INTERIOR ELEVATIONS
A2.8 ADAPTABLE/STANDARD 1–BEDROOM ENLARGED BATH PLANS, INTERIOR ELEVATIONS & SECTIONS
A2.9 ADAPTABLE 2/3–BEDROOM ENLARGED BATH PLANS INTERIOR ELEVATIONS
A2.10 STANDARD 2/3–BEDROOM ENLARGED BATH PLANS & INTERIOR ELEVATIONS
A2.11 CLUBHOUSE PLAN & SCHEDULES
A2.12 CLUBHOUSE ENLARGED PLANS & DETAILS
A3.1 BUILDING A – EXTERIOR ELEVATIONS ASI 5
A3.2 BUILDING B – EXTERIOR ELEVATIONS
A3.3 BUILDINGS A, B & C – EXTERIOR ELEVATIONS ASI 5
A3.4 BUILDING C – EXTERIOR ELEVATIONS
A4.1 TYPICAL WALL SECTIONS
A4.2 TYPICAL WALL SECTIONS
A4.3 TYPICAL WALL SECTIONS
A4.4 DETAILS
A4.5 DETAILS
A4.6 ENTRY SECTIONS & DETAILS
A4.7 CLUBHOUSE SECTIONS & DETAILS
A4.8 CLUBHOUSE SECTIONS & DETAILS
A4.9 FIRE-PENTRATION DETAILS ASI 8
A4.10 MANUFACTURED STONE DETAILS
A4.11 HARDI PANEL SIDING DETAILS
A5.1 ROOF PLANS ASI 4
A5.1C ROOF PLANS
A5.2 ROOF DETAILS & STAIR SECTIONS
A6.1 STAIR SECTION & ENLARGED PLANS
A7.1 APARTMENT REFLECTED CEILING PLANS

STRUCTURAL

S001 GENERAL NOTES
S002 GENERAL NOTES
S003 SCHEDULES
S101 BLDG A – FOUNDATION PLAN
S102 BLDG A – LEVEL 2 PLAN
S103 BLDG A – LEVEL 3 PLAN
S104 BLDG A – ROOF PLAN
S105 BLDG B – FOUNDATION PLAN
S106 BLDG B – LEVEL 2 PLAN
S107 BLDG B – LEVEL 3 PLAN ASI 5
S108 BLDG B – ROOF PLAN
S109 BLDG C – FOUNDATION PLAN
S110 BLDG C – LEVEL 2 PLAN
S111 BLDG C – LEVEL 3 PLAN
S112 BLDG C – ROOF PLAN
S500 FOUNDATION DETAILS
S501 FOUNDATION DETAILS
S505 TYPICAL WOOD DETAILS
S510 FRAMING DETAILS
S511 FRAMING DETAILS
S520 ROOF DETAILS
S521 ROOF DETAILS
S530 SHEAR WALL DETAILS

ELECTRICAL

ME1.0 M/E SITE PLAN
E0.1 ELECTRICAL ABBREVIATIONS, LEGENDS, NOTES
E1.1 BUILDING A – 1ST & 2ND FLOOR POWER PLANS
E1.2 BUILDING A – 3RD FLOOR POWER PLAN
E1.3 BUILDING B – 1ST & 2ND FLOOR POWER PLANS ASI 5
E1.4 BUILDING B – 3RD FLOOR POWER PLAN
E1.5 BUILDING C – 1ST & 2ND FLOOR POWER PLANS
E1.6 BUILDING C – 3RD FLOOR POWER PLAN
E4.1 APARTMENT & CLUBHOUSE POWER PLANS
E6.1 LIGHTING DIAGRAMS & LIGHTING SCHEDULE
E6.2 PANEL SCHEDULES & RISER DIAGRAMS
E6.3 PANEL SCHEDULES

MECHANICAL/PLUMBING

M0.1 HVAC ABBREVIATIONS, LEGENDS, NOTES
M1.1 BUILDING A – 1ST & 2ND FLOOR HVAC PLANS
M1.2 BUILDING A – 3RD FLOOR HVAC PLAN
M1.3 BUILDING B – 1ST & 2ND HVAC PLANS ASI 5
M1.4 BUILDING B – 3RD FLOOR HVAC PLAN
M1.5 BUILDING C – 1ST & 2ND HVAC PLANS
M1.6 BUILDING C – 3RD FLOOR HVAC PLAN
M4.1 ENLARGED 1st/2nd FLOOR APARTMENT HVAC PLANS
M4.2 ENLARGED 3rd FLOOR APARTMENT HVAC PLANS
M6.1 SCHEDULES AND DETAILS
P0.1 PLUMBING ABBREVIATIONS, LEGENDS, NOTES
P1.1 BUILDING A – UNDERFLOOR & 1ST FLOOR WASTE & VENT PLANS
P1.2 BUILDING A – 2ND & 3RD FLOOR WASTE & VENT PLANS
P1.3 BUILDING B – UNDERFLOOR & 1ST FLOOR WASTE & VENT PLANS
P1.4 BUILDING B – 2ND & 3RD FLOOR WASTE & VENT PLANS ASI 5
P1.5 BUILDING C – UNDERFLOOR & 1ST FLOOR WASTE & VENT PLANS
P1.6 BUILDING C – 2ND & 3RD FLOOR WASTE & VENT PLANS
P1.7 BUILDING A & B – FIRST FLOOR DOMESTIC WATER PLANS
P1.8 BUILDING C – FIRST FLOOR DOMESTIC WATER PLANS
P4.1 ENLARGED APARTMENT DOMESTIC WATER PLANS
P4.2 ENLARGED APARTMENT & CLUBHOUSE DOMESTIC WATER PLANS
P6.1 SCHEDULES AND DETAILS
P9.1 WASTE & VENT RISER DIAGRAMS ASI 8
P9.2 WASTE & VENT RISER DIAGRAMS
P9.3 APARTMENT WATER SERVICE RISER DIAGRAMS

FIRE SPRINKLER DESIGN

ASI 12
DS.1 BUILDING A – DESIGN INTEND DRAWINGS AND SPECS
DS.2 BUILDING B – DESIGN INTEND DRAWINGS AND SPECS
DS.3 BUILDING C – DESIGN INTEND DRAWINGS AND SPECS

ASI 12

SFMO APPROVAL STAMPS

CONSTRUCTION SET (thru ASI 12) 3-5-2026

SCOPE OF WORK

START AT FLANGE INSIDE OF FIRE RISER ROOM AND PROVIDE NEW AUTOMATIC WET-PIPE FIRE PROTECTION SPRINKLER SYSTEM THROUGHOUT EACH NEW BUILDING.

BUILDING DATA

NFPA STANDARD: NFPA 13-2019, NFPA 13R-2019

OCCUPANCY GROUP: R-2 (RESIDENTIAL), B (BUSINESS)

NO. OF STORIES: 3

PEAK BUILDING HEIGHT: 42'-2"

CONSTRUCTION TYPE: V-B

GENERAL NOTES

1. ALL SPRINKLER PIPING DESIGN, INSTALLATION, AND TESTING SHALL COMPLY WITH NFPA 13 AND NFPA 13R
2. PIPING SHALL BE SEISMICALLY BRACED.
3. ALL EQUIPMENT SHALL BE UL LISTED AND/OR FM APPROVED FOR THIS INTENDED APPLICATION.
4. FIRE PROTECTION DESIGNER SHALL COORDINATE LOCATION OF ALL SPRINKLERS AND PIPING WITH STRUCTURAL ELEMENTS, MECHANICAL, PLUMBING, ELECTRICAL EQUIPMENT, AND CEILING CONFIGURATION.
5. ALL ELECTRICAL COMPONENTS SHALL BE INSTALLED IN ACCORDANCE WITH NFPA 70 AND NFPA 72.
6. SPRINKLERS SHALL BE CENTERED IN CEILING TILES THROUGHOUT ALL FINISHED SPACES WHERE APPLICABLE.
7. ALL PIPING SUBJECT TO TEMPERATURES BELOW 40 F SHALL BE DRY-TYPE OR HAVE OTHER ADEQUATE MEANS OF FREEZE PROTECTION. DRY-TYPE SYSTEMS SHOULD HAVE A DESIGN AREA INCREASE OF 30%.
8. ALL LOW POINTS IN DRY SYSTEMS SHALL HAVE A DRUM DRIP.
9. TAMPER SWITCHES SHALL BE INSTALLED ON ALL VALVES REQUIRED TO BE SUPERVISED
10. WATER FLOW SWITCHES IN DRY SYSTEMS SHALL BE OF THE PRESSURE-TYPE.
11. FDC CONNECTION TO BE 4" STORZ TYPE.
12. SYSTEM DESIGN PRESSURE SHALL BE 175 PSIG

LIGHT HAZARD DESIGN CRITERIA

AREAS: COMMON AREAS, OFFICES

SYSTEM TYPE: WET

DESIGN DENSITY: 0.10 GPM/SQ. FT.

DESIGN AREA: 1,500 SQ. FT.

HOSE STREAM ALLOWANCE: 100 GPM

ORDINARY HAZARD GROUP 1 CRITERIA

AREAS: MECHANICAL ROOMS, STORAGE

SYSTEM TYPE: WET

DESIGN DENSITY: 0.15 GPM/SQ. FT.

DESIGN AREA: 1,500 SQ. FT.

HOSE STREAM ALLOWANCE: 100 GPM

RESIDENTIAL DESIGN CRITERIA

RESIDENTIAL AREAS

SYSTEM TYPE: WET

DESIGN DENSITY: 0.05 GPM/SQ. FT.

HOSE STREAM ALLOWANCE: 100 GPM

MATERIAL REQUIREMENTS

- ALL PIPING AND COMPONENTS SHALL BE RATED FOR A PRESSURE THAT EXCEEDS THE THE DESIGN PRESSURE OF THE SYSTEM.
- ALL PIPING SHALL BE SCH 40 OR SCHEDULE 10 BLACK STEEL ASTM A53, A135, OR A795 WITH MIC COATING UNLESS ALLOWED BY NFPA 13R 6.2.2.
- CPVC PIPING IN ACCORDANCE WITH NFPA 13R IS ALLOWED FOR RESIDENTIAL AND LIGHT HAZARD OCCUPANCIES
- ALL SYSTEM COMPONENTS, PIPE, AND FITTINGS SHALL BE NEW AND UL LISTED OR FM APPROVED.

WATER SUPPLY DATA

FLOW TEST PERFORMED BY JACKSON PETTIGREW OF BROWNSVILLE ENERGY AUTHORITY. CONTRACTOR TO REQUEST LOCATION OF STATIC AND RESIDUAL HYDRANTS FOR HYDRAULIC CALCULATIONS.
TEST DATE: 3-17-2025

- STATIC: 68 PSI
- RESIDUAL: 52 PSI
- FLOW: 1,000 GPM

SEISMIC DESIGN CRITERIA

THE PROJECT IS LOCATED IN A SEISMIC ZONE AND FIRE PROTECTION SYSTEM SHALL BE DESIGNED TO WITHSTAND DAMAGE AGAINST EARTHQUAKES IN ACCORDANCE WITH NFPA 13.
SEISMIC DESIGN PARAMETERS:

- Ss = 0.902
- S1: 0.318g
- Sds: 0.685g
- Sd1: 0.34
- Design Category: D

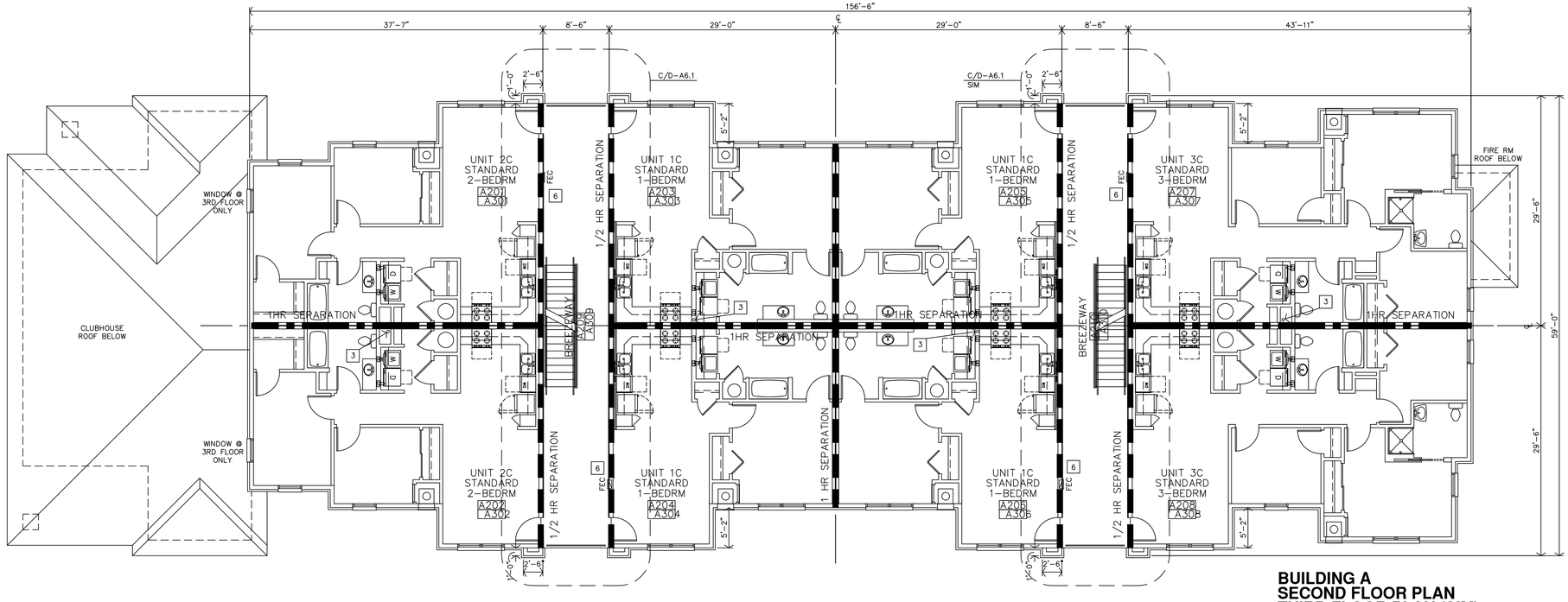

B **BUILDING A**
SECOND FLOOR PLAN
THIRD FLOOR PLAN (SIM)
1/8"=1'-0"

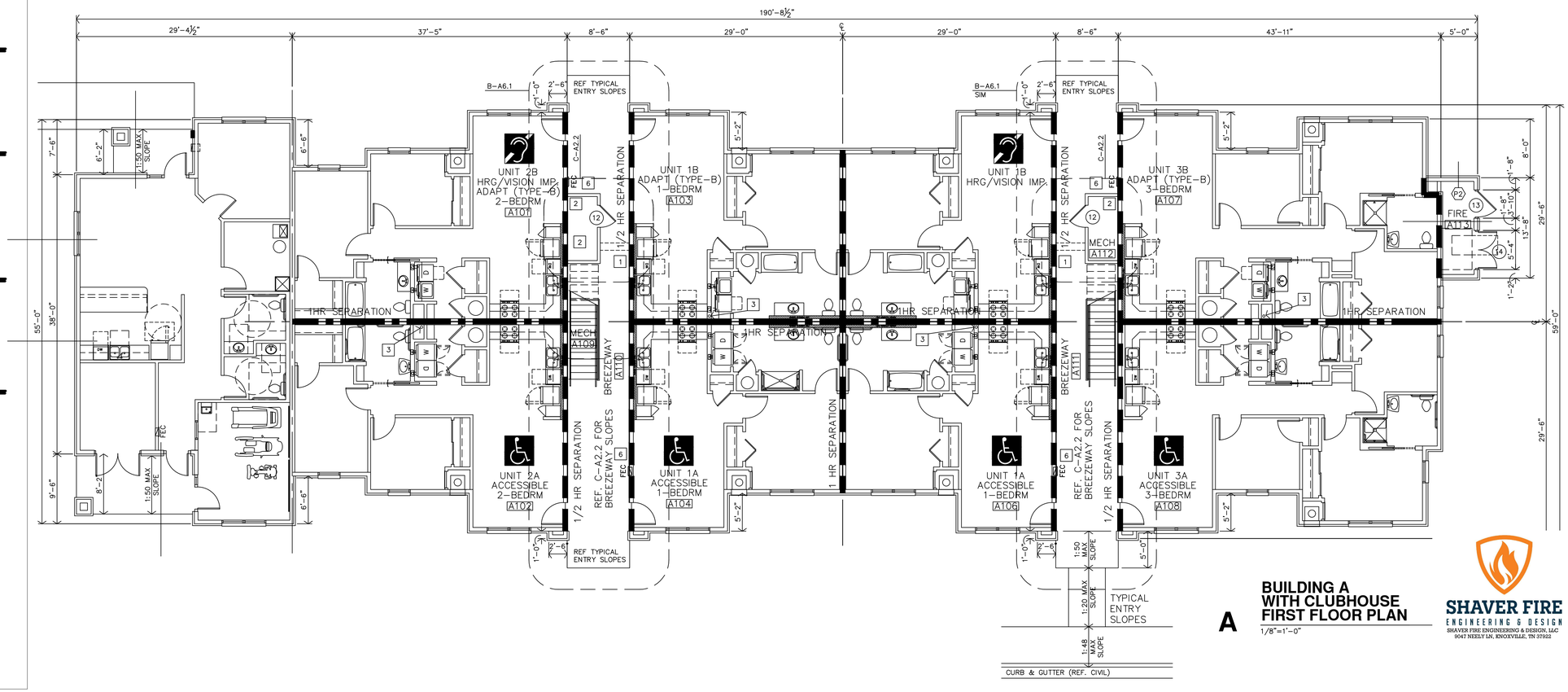

A **BUILDING A**
WITH CLUBHOUSE
FIRST FLOOR PLAN
1/8"=1'-0"

SHAVER FIRE
ENGINEERING & DESIGN
SHAVER FIRE ENGINEERING & DESIGN, LLC
9047 NEELY LN, KNOXVILLE, TN 37922

JonesGillamRenz
730 N. Ninth 1881 Main Street, Suite 301
Salina, KS 67401 Kansas City, MO 64108
785.827.0386 jgr@jgrarchitects.com

THE RESERVES AT COBALT CIRCLE

NEW APARTMENTS

BROWNSVILLE, TENNESSEE

DERRICK A. SHAVER
REGISTERED ENGINEER
STATE OF TENNESSEE
2/11/26

REVISION: 0

DATE: 2/11/26

JOB: 24-3446

SHEET NO.: FP DESIGN INTENT BLDG A

DS.1

COPYRIGHTED ©

SCOPE OF WORK

START AT FLANGE INSIDE OF FIRE RISER ROOM AND PROVIDE NEW AUTOMATIC WET-PIPE FIRE PROTECTION SPRINKLER SYSTEM THROUGHOUT EACH NEW BUILDING.

BUILDING DATA

NFPA STANDARD: NFPA 13-2019, NFPA 13R-2019

OCCUPANCY GROUP: R-2 (RESIDENTIAL), B (BUSINESS)

NO. OF STORIES: 3

PEAK BUILDING HEIGHT: 42'-2"

CONSTRUCTION TYPE: V-B

GENERAL NOTES

1. ALL SPRINKLER PIPING DESIGN, INSTALLATION, AND TESTING SHALL COMPLY WITH NFPA 13 AND NFPA 13R
2. PIPING SHALL BE SEISMICALLY BRACED.
3. ALL EQUIPMENT SHALL BE UL LISTED AND/OR FM APPROVED FOR THIS INTENDED APPLICATION.
4. FIRE PROTECTION DESIGNER SHALL COORDINATE LOCATION OF ALL SPRINKLERS AND PIPING WITH STRUCTURAL ELEMENTS, MECHANICAL, PLUMBING, ELECTRICAL EQUIPMENT, AND CEILING CONFIGURATION.
5. ALL ELECTRICAL COMPONENTS SHALL BE INSTALLED IN ACCORDANCE WITH NFPA 70 AND NFPA 72.
6. SPRINKLERS SHALL BE CENTERED IN CEILING TILES THROUGHOUT ALL FINISHED SPACES WHERE APPLICABLE.
7. ALL PIPING SUBJECT TO TEMPERATURES BELOW 40 F SHALL BE DRY-TYPE OR HAVE OTHER ADEQUATE MEANS OF FREEZE PROTECTION. DRY-TYPE SYSTEMS SHOULD HAVE A DESIGN AREA INCREASE OF 30%.
8. ALL LOW POINTS IN DRY SYSTEMS SHALL HAVE A DRUM DRIP.
9. TAMPER SWITCHES SHALL BE INSTALLED ON ALL VALVES REQUIRED TO BE SUPERVISED
10. WATER FLOW SWITCHES IN DRY SYSTEMS SHALL BE OF THE PRESSURE-TYPE.
11. FDC CONNECTION TO BE 4" STORZ TYPE.
12. SYSTEM DESIGN PRESSURE SHALL BE 175 PSIG

LIGHT HAZARD DESIGN CRITERIA

AREAS: COMMON AREAS, OFFICES

SYSTEM TYPE: WET

DESIGN DENSITY: 0.10 GPM/SQ. FT.

DESIGN AREA: 1,500 SQ. FT.

HOSE STREAM ALLOWANCE: 100 GPM

ORDINARY HAZARD GROUP 1 CRITERIA

AREAS: MECHANICAL ROOMS, STORAGE

SYSTEM TYPE: WET

DESIGN DENSITY: 0.15 GPM/SQ. FT.

DESIGN AREA: 1,500 SQ. FT.

HOSE STREAM ALLOWANCE: 100 GPM

RESIDENTIAL DESIGN CRITERIA

RESIDENTIAL AREAS

SYSTEM TYPE: WET

DESIGN DENSITY: 0.05 GPM/SQ. FT.

HOSE STREAM ALLOWANCE: 100 GPM

MATERIAL REQUIREMENTS

- ALL PIPING AND COMPONENTS SHALL BE RATED FOR A PRESSURE THAT EXCEEDS THE THE DESIGN PRESSURE OF THE SYSTEM.
- ALL PIPING SHALL BE SCH 40 OR SCHEDULE 10 BLACK STEEL ASTM A53, A135, OR A795 WITH MIC COATING UNLESS ALLOWED BY NFPA 13R 5.2.2.
- CPVC PIPING IN ACCORDANCE WITH NFPA 13R IS ALLOWED FOR RESIDENTIAL AND LIGHT HAZARD OCCUPANCIES
- ALL SYSTEM COMPONENTS, PIPE, AND FITTINGS SHALL BE NEW AND UL LISTED OR FM APPROVED.

WATER SUPPLY DATA

FLOW TEST PERFORMED BY JACKSON PETTIGREW OF BROWNSVILLE ENERGY AUTHORITY. CONTRACTOR TO REQUEST LOCATION OF STATIC AND RESIDUAL HYDRANTS FOR HYDRAULIC CALCULATIONS.
TEST DATE: 3-17-2025

- STATIC: 68 PSI
- RESIDUAL: 52 PSI
- FLOW: 1,000 GPM

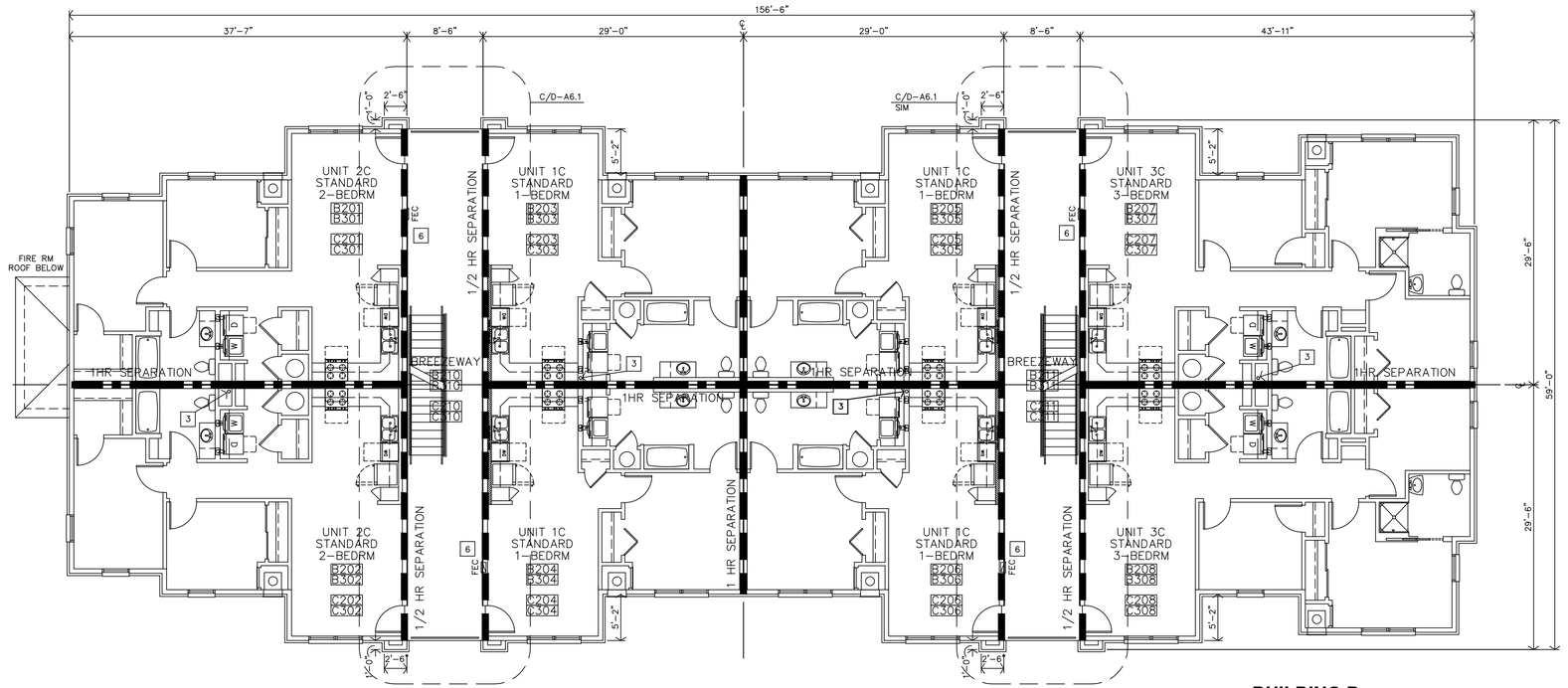

B **BUILDING B**
SECOND FLOOR PLAN
THIRD FLOOR PLAN (SIM)
1/8"=1'-0"

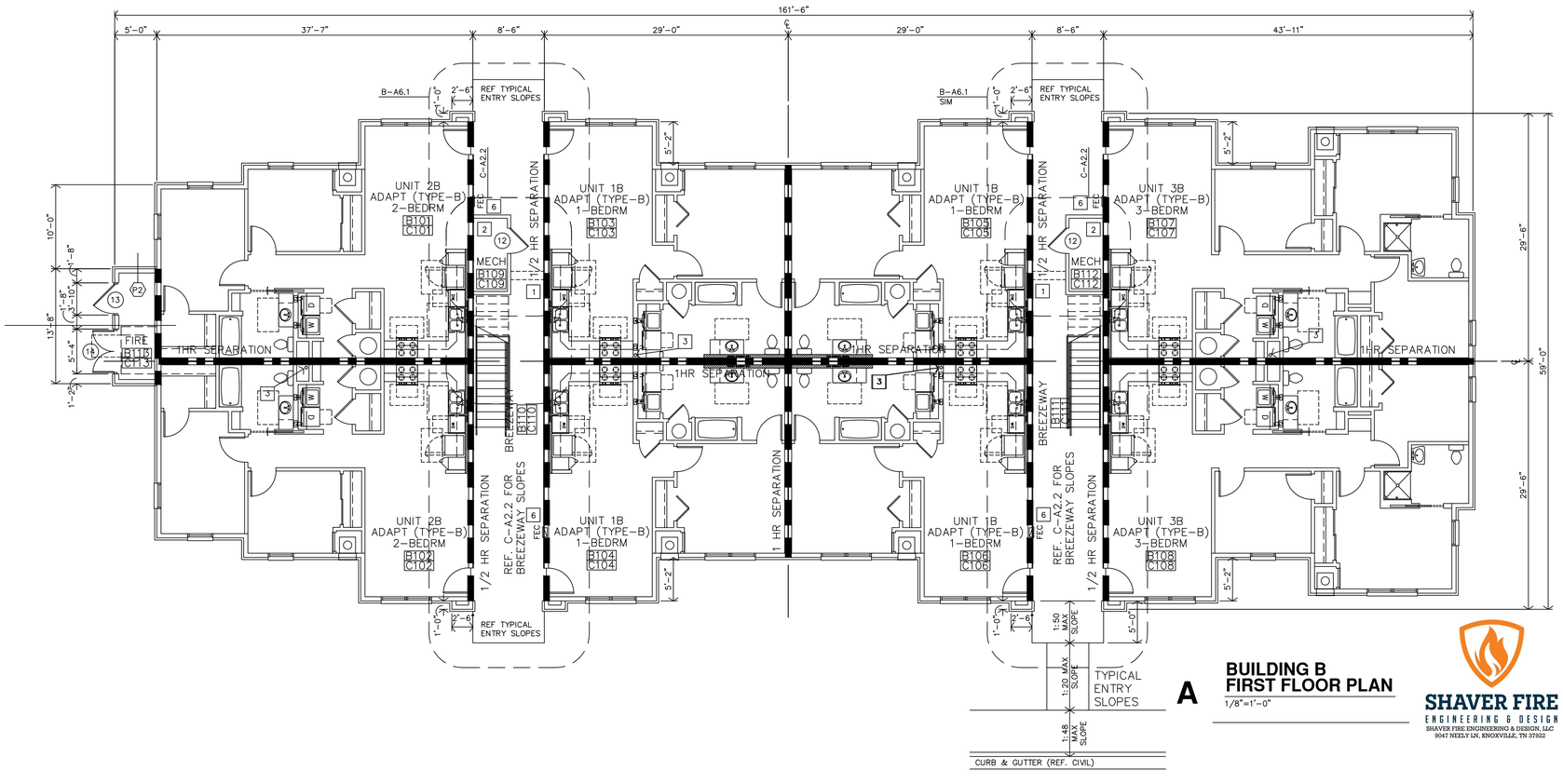

A **BUILDING B**
FIRST FLOOR PLAN
1/8"=1'-0"

SHAVER FIRE
ENGINEERING & DESIGN
SHAVER FIRE ENGINEERING & DESIGN, LLC
9047 NEELY LN, KNOXVILLE, TN 37922

JonesGillamRenz
730 N. Ninth 1881 Main Street, Suite 301
Salina, KS 67401 Kansas City, MO 64108
785.827.0386 jgr@jgrarchitects.com

THE RESERVES AT COBALT CIRCLE

NEW APARTMENTS

BROWNSVILLE, TENNESSEE

DERRICK A. SHAVER
REGISTERED ENGINEER
AGRICULTURE
STATE OF TENNESSEE
2/11/26

REVISION: 0

DATE: 2/11/26
JOB: 24-3446
SHEET NO.:
FP DESIGN INTENT
BLDG B

DS.2

COPYRIGHTED©

SCOPE OF WORK

START AT FLANGE INSIDE OF FIRE RISER ROOM AND PROVIDE NEW AUTOMATIC WET-PIPE FIRE PROTECTION SPRINKLER SYSTEM THROUGHOUT EACH NEW BUILDING.

BUILDING DATA

NFPA STANDARD: NFPA 13-2019, NFPA 13R-2019

OCCUPANCY GROUP: R-2 (RESIDENTIAL), B (BUSINESS)

NO. OF STORIES: 3

PEAK BUILDING HEIGHT: 42'-2"

CONSTRUCTION TYPE: V-B

GENERAL NOTES

1. ALL SPRINKLER PIPING DESIGN, INSTALLATION, AND TESTING SHALL COMPLY WITH NFPA 13 AND NFPA 13R
2. PIPING SHALL BE SEISMICALLY BRACED.
3. ALL EQUIPMENT SHALL BE UL LISTED AND/OR FM APPROVED FOR THIS INTENDED APPLICATION.
4. FIRE PROTECTION DESIGNER SHALL COORDINATE LOCATION OF ALL SPRINKLERS AND PIPING WITH STRUCTURAL ELEMENTS, MECHANICAL, PLUMBING, ELECTRICAL EQUIPMENT, AND CEILING CONFIGURATION.
5. ALL ELECTRICAL COMPONENTS SHALL BE INSTALLED IN ACCORDANCE WITH NFPA 70 AND NFPA 72.
6. SPRINKLERS SHALL BE CENTERED IN CEILING TILES THROUGHOUT ALL FINISHED SPACES WHERE APPLICABLE.
7. ALL PIPING SUBJECT TO TEMPERATURES BELOW 40 F SHALL BE DRY-TYPE OR HAVE OTHER ADEQUATE MEANS OF FREEZE PROTECTION. DRY-TYPE SYSTEMS SHOULD HAVE A DESIGN AREA INCREASE OF 30%.
8. ALL LOW POINTS IN DRY SYSTEMS SHALL HAVE A DRUM DRIP.
9. TAMPER SWITCHES SHALL BE INSTALLED ON ALL VALVES REQUIRED TO BE SUPERVISED
10. WATER FLOW SWITCHES IN DRY SYSTEMS SHALL BE OF THE PRESSURE-TYPE.
11. FDC CONNECTION TO BE 4" STORZ TYPE.
12. SYSTEM DESIGN PRESSURE SHALL BE 175 PSIG

LIGHT HAZARD DESIGN CRITERIA

AREAS: COMMON AREAS, OFFICES

SYSTEM TYPE: WET

DESIGN DENSITY: 0.10 GPM/SQ. FT.

DESIGN AREA: 1,500 SQ. FT.

HOSE STREAM ALLOWANCE: 100 GPM

ORDINARY HAZARD GROUP 1 CRITERIA

AREAS: MECHANICAL ROOMS, STORAGE

SYSTEM TYPE: WET

DESIGN DENSITY: 0.15 GPM/SQ. FT.

DESIGN AREA: 1,500 SQ. FT.

HOSE STREAM ALLOWANCE: 100 GPM

RESIDENTIAL DESIGN CRITERIA

RESIDENTIAL AREAS

SYSTEM TYPE: WET

DESIGN DENSITY: 0.05 GPM/SQ. FT.

HOSE STREAM ALLOWANCE: 100 GPM

MATERIAL REQUIREMENTS

- ALL PIPING AND COMPONENTS SHALL BE RATED FOR A PRESSURE THAT EXCEEDS THE THE DESIGN PRESSURE OF THE SYSTEM.
- ALL PIPING SHALL BE SCH 40 OR SCHEDULE 10 BLACK STEEL ASTM A53, A135, OR A795 WITH MIC COATING UNLESS ALLOWED BY NFPA 13R 5.2.2.
- CPVC PIPING IN ACCORDANCE WITH NFPA 13R IS ALLOWED FOR RESIDENTIAL AND LIGHT HAZARD OCCUPANCIES
- ALL SYSTEM COMPONENTS, PIPE, AND FITTINGS SHALL BE NEW AND UL LISTED OR FM APPROVED.

WATER SUPPLY DATA

FLOW TEST PERFORMED BY JACKSON PETTIGREW OF BROWNSVILLE ENERGY AUTHORITY. CONTRACTOR TO REQUEST LOCATION OF STATIC AND RESIDUAL HYDRANTS FOR HYDRAULIC CALCULATIONS.
TEST DATE: 3-17-2025

- STATIC: 68 PSI
- RESIDUAL: 52 PSI
- FLOW: 1,000 GPM

SEISMIC DESIGN CRITERIA

THE PROJECT IS LOCATED IN A SEISMIC ZONE AND FIRE PROTECTION SYSTEM SHALL BE DESIGNED TO WITHSTAND DAMAGE AGAINST EARTHQUAKES IN ACCORDANCE WITH NFPA 13.
SEISMIC DESIGN PARAMETERS:

- Ss = 0.902
- S1: 0.318g
- Sds: 0.685g
- Sd1: 0.34
- Design Category: D

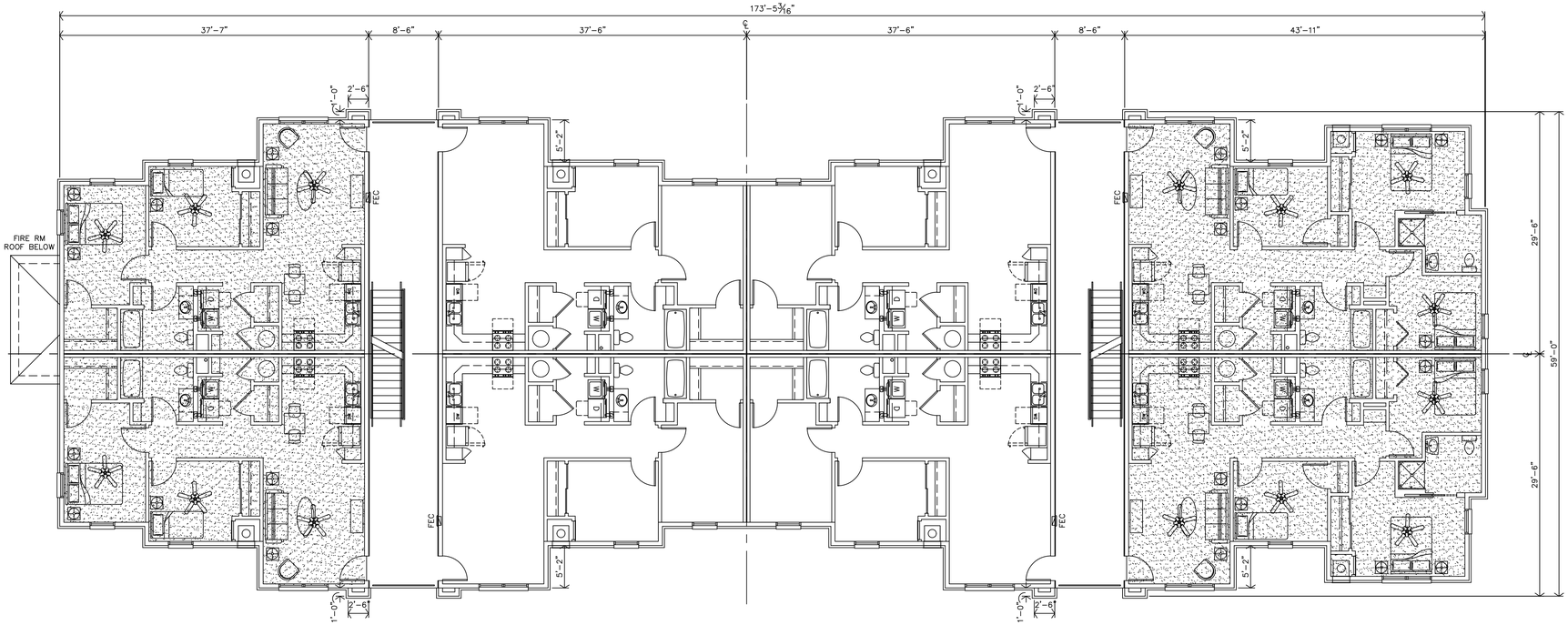

B **BUILDING C SECOND FLOOR PLAN THIRD FLOOR PLAN (SIM)**
1/8"=1'-0"

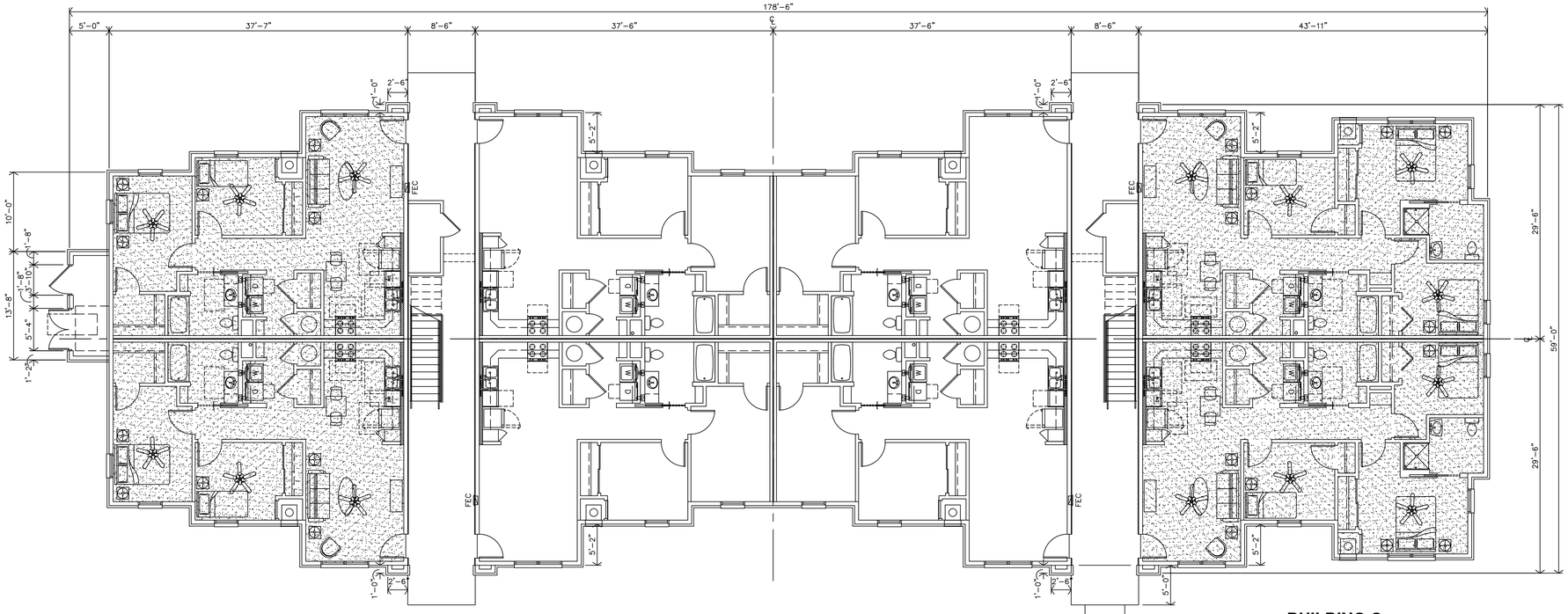

A **BUILDING C FIRST FLOOR PLAN**
1/8"=1'-0"

JonesGillamRenz
730 N. Ninth 1881 Main Street, Suite 301
Salina, KS 67401 Kansas City, MO 64108
785.827.0386 jgr@jgrarchitects.com

THE RESERVES AT COBALT CIRCLE

NEW APARTMENTS

BROWNSVILLE, TENNESSEE

DERRICK A. SHAVER
REGISTERED ENGINEER
AGRICULTURE
No. 117344
STATE OF TENNESSEE
2/11/26

REVISION: 0

DATE: 2/11/26
JOB: 24-3446
SHEET NO.:
FP DESIGN INTENT BLDG C
DS.3

SHAVER FIRE
ENGINEERING & DESIGN
SHAVER FIRE ENGINEERING & DESIGN, LLC
9047 NESLY LN, KNOXVILLE, TN 37922

COPYRIGHTED©

Department of Commerce & Insurance

Date: 03/05/2026

To: Margaret Gillam
Jones Gillam Renz Architects
730 N. Ninth Street
Salina, KS 67401

RE: Approval of Plans (Sprinkler Design Intent)
The Reserves at Cobalt Circle
1616 E. Jefferson
Brownsville, TN 38012

TFM # 21689-A
21689-B
21689-C
Project # 2025-11-03-04
County: Haywood

Dear Margaret Gillam,

The construction documents submitted to our office for the above referenced project have been reviewed for compliance with the minimum standards for fire prevention, fire protection, and building construction safety of the *Rules of Tennessee Department of Commerce and Insurance, Division of Fire Prevention, Chapter 0780-02-02, Codes and Standards*.

This is not a public building. Therefore, it is not subject to Tenn. Code Ann. § 68-120-201, et seq., the Tennessee Public Building Accessibility Act. It has not been reviewed for compliance with the 2010 ADA Standards for Accessible Design. It has not been reviewed for compliance with the Americans with Disabilities Act.

Plans are approved. (Sprinkler Design Intent) The overall building is now approved.

No approval of plans, or failure to review, plans, and specifications by the Division shall relieve the owner, developer, contractor, or designing architect or engineer of their respective responsibilities for compliance with applicable codes respecting fire prevention, fire protection, and building construction. Rule *0780-02-03-.05.*

Approved plans are available electronically at https://apps.tn.gov/tnsfmo/. They must be printed with all markups and stamps and placed at the project site prior to construction. They shall be available to the State Fire Marshal's Office inspector and retained until a CO has been issued by the Division. Failure to have the plans at the site and available to the inspector may be grounds for a Stop Work Order to be issued. Rule 0780-02-03-.05.

All subsequent construction document revisions that impact the approved plan's fire prevention, fire protection, or building construction safety must be submitted to this office for review and approval.

FIELD SET TFM# 21689-A, 21689-B, 21689-C PROJECT# 2025-11-03-04

THESE PLANS AND SPECIFICATIONS ARE REQUIRED TO BE KEPT ON THE JOB SITE UNTIL A FINAL CERTIFICATE OF OCCUPANCY OR PROJECT COMPLETION FORM IS ISSUED BY TNS OFFICE.
No alterations, deletions, additions or modifications of any kind are allowed to this approved set without written permission of this office.
TENNESSEE STATE FIRE MARSHAL'S OFFICE

Department of Commerce & Insurance

New buildings shall have approved radio coverage for emergency responders within the building based upon the existing coverage levels of the public safety communication systems of the jurisdiction at the exterior of the building. Emergency responder radio coverage must be verified in the field prior to the issuance of a CO. The test should be performed by the local fire department after interior and exterior walls and the roof are constructed.

The project's contractor must contact the Tennessee State Fire Marshal's Office inspector prior to construction to ensure that the proper inspections are performed.

Field Verification:

Engineered wood truss drawings and/or engineered steel joist drawings must be submitted for approval to the architect or engineer of record prior to installation. Engineer's approval should be verified by one of the following:

- signed and dated Shop Drawing Review Stamp, or
- signed and dated letter stating acceptance

A CO will be issued after work is completed and all inspections are performed and satisfied. The building must have a CO before it may be occupied. Rule 0780-02-03-.09.

Sincerely,

Jeremy Hubanks, Plans Examiner II
Codes Enforcement Section

cc: Kevin Krumrey, SFMO Fire & Building Codes Inspector
Daniel Garrett, SFMO Fire & Building Codes Supervisor

Attachment: Requirements for Inspections of Construction (3 Sheets)
Approved Sprinkler Design Intent (4 Sheets)

Approval: Occupancy Type: R-2, B, 3-Stories, Construction Type: V-B, Sprinklered

FIELD SET TFM# 21689-A, 21689-B, 21689-C PROJECT# 2025-11-03-04

THESE PLANS AND SPECIFICATIONS ARE REQUIRED TO BE KEPT ON THE JOB SITE UNTIL A FINAL CERTIFICATE OF OCCUPANCY OR PROJECT COMPLETION FORM IS ISSUED BY THIS OFFICE.
No alterations, deletions, additions or modifications of any kind are allowed to this approved set without written permission of this office.
TENNESSEE STATE FIRE MARSHAL'S OFFICE

Inspection Information for Construction

This document provides information to assist contractors with State Fire Marshal's Office inspections. Many building projects have multiple Authorities Having Jurisdiction and consultation with those authorities is needed to meet their requirements. This is not a code checklist. It contains information pertinent to most new building projects; however, additional requirements may apply depending on the specific circumstances of each individual project.

SITE CONSTRUCTION DOCUMENTS

1. State Fire Marshal's Office (SFMO) approved architectural plans must be at the site before construction begins and must remain there until a Certificate of Occupancy is issued;
2. Grading and site preparation may begin prior to plan approval;
3. If a fire sprinkler system is installed, approved sprinkler plans must be on site prior to installation of underground or aboveground piping;
4. If a commercial kitchen hood and duct system is installed, the design intent must be on the approved plans. Shop drawings do not require approval;
5. A copy of the Tennessee contractor's license must be available for all bids over $25,000;
6. A copy of the Tennessee electrician's license must be available;
7. A copy of the Tennessee fire alarm contractor's license must be available where fire alarm work is performed or a written exemption certificate from the contractor's board. All fire alarm work including wiring, installation of components, etc. must be done by a fire alarm contractor or exempted electrical contractor;
8. A copy of the Tennessee licensed portable or fixed fire suppression contractor's license must be available for applicable work;
9. A copy of the Tennessee licensed fire sprinkler contractor's license must be available for all work beginning at the Point of Service (where water is used solely for fire protection). This includes underground water lines used solely for fire protection.

FIRE SAFETY DURING CONSTRUCTION AND DEMOLITION

1. Fire department access roads and lanes must be provided. Fire hydrants must be provided before combustible materials are on site;
2. Buildings four (4) or more stories in height shall be provided with at least one (1) standpipe. Standpipes shall be operational when the building is 40 feet above the lowest level of fire department access. Fire department hose connections must be at accessible locations adjacent to usable stairs. Standpipes shall be extended as construction progresses to within one (1) floor of the highest point of construction having secured decking or flooring;
3. Stairways are required where the building is constructed to 50 feet or four (4) stories;
4. Required means of egress for existing buildings must be maintained during construction.

FIELD SET TFM# 21689-A, 21689-B, 21689-C PROJECT# 2025-11-03-04

Fire Prevention/State Fire Marshal's Office • 500 James Robertson Pkwy • 10th Floor, Davy Crockett Tower
Nashville, TN 37243-1162 • Tel: 615-741-7190 • Fax: 615-253-3267 • tn.gov/fire

THESE PLANS AND SPECIFICATIONS ARE REQUIRED TO BE KEPT ON THE JOB SITE UNTIL A FINAL CERTIFICATE OF OCCUPANCY OR PROJECT COMPLETION FORM IS ISSUED BY THIS OFFICE.
No alterations, deletions, additions or modifications of any kind are allowed to this approved set without written permission of this office.
TENNESSEE STATE FIRE MARSHAL'S OFFICE

TN Department of Commerce & Insurance

Inspection Information for Construction

FIELD SET TFM# 21689-A, 21689-B, 21689-C PROJECT# 2025-11-03-04

REVISIONS TO APPROVED PLANS

The building must be built according to the State Fire Marshal approved plans. Change orders, revisions, etc. that impact building, fire or life safety of the project cannot be made until the revisions are approved in writing and the plans are at the site.

INSPECTIONS

Contact your local SFMO inspector at least five (5) days prior to an inspection. Failure to schedule an inspection may result in costly repairs from exposing covered construction, or a Certificate of Occupancy not being issued. Inspections are required for:

1. **Foundation:** Inspections are required after poles or piers are set or trenches or basement areas are excavated and any required forms erected and any required reinforcing steel is in place and supported prior to the placing of concrete. The foundation inspection shall include excavations for thickened slabs intended for the support of bearing walls, partitions, structural supports, equipment and special requirements for wood foundations. Proper dimensions, installation and size of re-bar must be determined to be compliant by SFMO inspector or a 3rd party inspection service before pouring;
2. **Fire Sprinkler Underground:** Inspections are required after bedding, piping and thrust blocks prior to backfill. Hydro-static tests must be performed and documented. The SFMO inspector must witness the test unless other arrangements are made with the inspector;
3. **Framing:** Inspections are required after roof, framing, fire stopping, draft stopping, bracing, rough-in plumbing, rough-in mechanical and rough-in electrical are in place, and prior to covering walls or ceilings;
4. **Fire Rated Wall/Roof/Ceiling Assemblies:** Inspections are required after drywall, spray applied foam or other system are applied;
5. **Above-Ceiling:** Inspections are required before ceiling installation and after fire sprinkler, final mechanical, final plumbing, fire stopping systems, fire dampers, electrical fire rated wall/floor/ceiling assemblies are in place;
6. **Final:** Inspections are required after all work is complete. The contractor must provide a worker for operation of fire or smoke damper testing, duct mounted smoke detectors, fire alarm devices, test and balance of commercial kitchen hood and duct units, operation of smoke evacuation/management systems. All systems must be operational and the subcontractors must test all systems prior to the final inspection;
7. **Functional tests and documents needed to pass the final inspection** are:
    a. When required, foundation inspection reports performed by 3rd party inspection services;
    b. Final electrical inspection approval;
    c. Functional testing of generator used for life safety systems;
    d. Functional test of exit signs and emergency lighting to include all means of egress areas and exit discharge to public way. Functional testing to be observed by SFMO inspector;
    e. Boiler inspections and tagging;
    f. Functional test of commercial kitchen hood and duct and suppression systems to include: light test,

Fire Prevention/State Fire Marshal's Office • 500 James Robertson Pkwy • 10th Floor, Davy Crockett Tower
Nashville, TN 37243-1162 • Tel: 615-741-7190 • Fax: 615-253-3267 • tn.gov/fire

THESE PLANS AND SPECIFICATIONS ARE REQUIRED TO BE KEPT ON THE JOB SITE UNTIL A FINAL CERTIFICATE OF OCCUPANCY OR PROJECT COMPLETION FORM IS ISSUED BY THIS OFFICE.
No alterations, deletions, additions or modifications of any kind are allowed to this approved set without written permission of this office.
TENNESSEE STATE FIRE MARSHAL'S OFFICE

"puff" test, energy shut-down test, capture and containment test and air balance report. Functional testing to be observed by SFMO inspector;

g. Functional test of fire alarm and Fire Alarm and Emergency Communication System Inspection and Testing Form per 2010 NFPA 72. Functional testing to be observed by SFMO inspector;
h. Functional test of fire sprinkler system and test reports and documentation for underground and aboveground systems. Functional testing to be observed by SFMO inspector;
i. Functional test of fire pumps and standpipes and acceptance test reports and documentation. Functional testing to be observed by SFMO inspector;
j. Functional test of smoke control systems acceptance test reports and documentation. Functional testing to be observed by SFMO inspector;
k. Test and balance reports for commercial HVAC systems;
l. Functional testing of shut-down test for HVAC units where applicable. Functional testing to be observed by SFMO inspector;
m. Functional testing of access controlled or delayed egress door hardware. Functional testing to be observed by SFMO inspector;
n. Elevator approval and acceptance test reports from the state elevator inspector;
o. For premanufactured metal buildings or metal framed buildings, inspection reports of structural welds and fastening devices by 3rd party inspection services;
p. Emergency responder radio coverage: New buildings shall have approved radio coverage for emergency responders within the building based upon the existing coverage levels of the public safety communication systems of the jurisdiction at the exterior of the building. This shall not require improvement of the existing public safety communication systems. The test should be performed by the local fire department after interior and exterior walls and the roof are constructed;
q. Inspection test reports and documentation for applications of fire retardant coatings;
r. For gated communities, functional test of security gate or barrier showing they are capable of receiving signals from emergency responders and allowing access.

Disclaimer: This document was developed by the Code Enforcement Section of the Tennessee Department of Commerce and Insurance. To the best of our knowledge, information contained in this document is accurate and reliable as of the date of release; however, we do not assume any liability for the accuracy or completeness.

Department of Commerce and Insurance
Authorization No. 335485 • 0 copies • September, 2018
This public document was promulgated at a cost of $35.00

FIELD SET TFM# 21689-A, 21689-B, 21689-C PROJECT# 2025-11-03-04

THESE PLANS AND SPECIFICATIONS ARE REQUIRED TO BE KEPT ON THE JOB SITE UNTIL A FINAL CERTIFICATE OF OCCUPANCY OR PROJECT COMPLETION FORM IS ISSUED BY THIS OFFICE.
No alterations, deletions, additions or modifications of any kind are allowed to this approved set without written permission of this office.
TENNESSEE STATE FIRE MARSHAL'S OFFICE

Department of Commerce & Insurance

Date: 03/05/2026

To: Margaret Gillam
Jones Gillam Renz Architects
730 N. Ninth Street
Salina, KS 67401

RE: Approval of Plans (Sprinkler Design Intent)
The Reserves at Cobalt Circle
1616 E. Jefferson
Brownsville, TN 38012

TFM # 21689-A
21689-B
21689-C
Project # 2025-11-03-04
County: Haywood

Dear Margaret Gillam,

The construction documents submitted to our office for the above referenced project have been reviewed for compliance with the minimum standards for fire prevention, fire protection, and building construction safety of the *Rules of Tennessee Department of Commerce and Insurance, Division of Fire Prevention, Chapter 0780-02-02, Codes and Standards*.

This is not a public building. Therefore, it is not subject to Tenn. Code Ann. § 68-120-201, et seq., the Tennessee Public Building Accessibility Act. It has not been reviewed for compliance with the 2010 ADA Standards for Accessible Design. It has not been reviewed for compliance with the Americans with Disabilities Act.

Plans are approved. (Sprinkler Design Intent) The overall building is now approved.

No approval of plans, or failure to review, plans, and specifications by the Division shall relieve the owner, developer, contractor, or designing architect or engineer of their respective responsibilities for compliance with applicable codes respecting fire prevention, fire protection, and building construction. Rule *0780-02-03-.05.*

Approved plans are available electronically at https://apps.tn.gov/tnsfmo/. They must be printed with all markups and stamps and placed at the project site prior to construction. They shall be available to the State Fire Marshal's Office inspector and retained until a CO has been issued by the Division. Failure to have the plans at the site and available to the inspector may be grounds for a Stop Work Order to be issued. Rule 0780-02-03-.05.

All subsequent construction document revisions that impact the approved plan's fire prevention, fire protection, or building construction safety must be submitted to this office for review and approval.

FIELD SET TFM# 21689-A, 21689-B, 21689-C PROJECT# 2025-11-03-04

THESE PLANS AND SPECIFICATIONS ARE REQUIRED TO BE KEPT ON THE JOB SITE UNTIL A FINAL CERTIFICATE OF OCCUPANCY OR PROJECT COMPLETION FORM IS ISSUED BY THIS OFFICE.
No alterations, deletions, additions or modifications of any kind are allowed to this approved set without written permission of this office.
TENNESSEE STATE FIRE MARSHAL'S OFFICE

Department of Commerce & Insurance

New buildings shall have approved radio coverage for emergency responders within the building based upon the existing coverage levels of the public safety communication systems of the jurisdiction at the exterior of the building. Emergency responder radio coverage must be verified in the field prior to the issuance of a CO. The test should be performed by the local fire department after interior and exterior walls and the roof are constructed.

The project's contractor must contact the Tennessee State Fire Marshal's Office inspector prior to construction to ensure that the proper inspections are performed.

Field Verification:

Engineered wood truss drawings and/or engineered steel joist drawings must be submitted for approval to the architect or engineer of record prior to installation. Engineer's approval should be verified by one of the following:

- signed and dated Shop Drawing Review Stamp, or
- signed and dated letter stating acceptance

A CO will be issued after work is completed and all inspections are performed and satisfied. The building must have a CO before it may be occupied. Rule 0780-02-03-.09.

Sincerely,

Jeremy Hubanks, Plans Examiner II
Codes Enforcement Section

cc: Kevin Krumrey, SFMO Fire & Building Codes Inspector
Daniel Garrett, SFMO Fire & Building Codes Supervisor

Attachment: Requirements for Inspections of Construction (3 Sheets)
Approved Sprinkler Design Intent (4 Sheets)

Approval: Occupancy Type: R-2, B, 3-Stories, Construction Type: V-B, Sprinklered

FIELD SET TFM# 21689-A, 21689-B, 21689-C PROJECT# 2025-11-03-04

THESE PLANS AND SPECIFICATIONS ARE REQUIRED TO BE KEPT ON THE JOB SITE UNTIL A FINAL CERTIFICATE OF OCCUPANCY OR PROJECT COMPLETION FORM IS ISSUED BY THIS OFFICE.
No alterations, deletions, additions or modifications of any kind are allowed to this approved set without written permission of this office.
TENNESSEE STATE FIRE MARSHAL'S OFFICE

Inspection Information for Construction

This document provides information to assist contractors with State Fire Marshal's Office inspections. Many building projects have multiple Authorities Having Jurisdiction and consultation with those authorities is needed to meet their requirements. This is not a code checklist. It contains information pertinent to most new building projects; however, additional requirements may apply depending on the specific circumstances of each individual project.

SITE CONSTRUCTION DOCUMENTS

1. State Fire Marshal's Office (SFMO) approved architectural plans must be at the site before construction begins and must remain there until a Certificate of Occupancy is issued;
2. Grading and site preparation may begin prior to plan approval;
3. If a fire sprinkler system is installed, approved sprinkler plans must be on site prior to installation of underground or aboveground piping;
4. If a commercial kitchen hood and duct system is installed, the design intent must be on the approved plans. Shop drawings do not require approval;
5. A copy of the Tennessee contractor's license must be available for all bids over $25,000;
6. A copy of the Tennessee electrician's license must be available;
7. A copy of the Tennessee fire alarm contractor's license must be available where fire alarm work is performed or a written exemption certificate from the contractor's board. All fire alarm work including wiring, installation of components, etc. must be done by a fire alarm contractor or exempted electrical contractor;
8. A copy of the Tennessee licensed portable or fixed fire suppression contractor's license must be available for applicable work;
9. A copy of the Tennessee licensed fire sprinkler contractor's license must be available for all work beginning at the Point of Service (where water is used solely for fire protection). This includes underground water lines used solely for fire protection.

FIRE SAFETY DURING CONSTRUCTION AND DEMOLITION

1. Fire department access roads and lanes must be provided. Fire hydrants must be provided before combustible materials are on site;
2. Buildings four (4) or more stories in height shall be provided with at least one (1) standpipe. Standpipes shall be operational when the building is 40 feet above the lowest level of fire department access. Fire department hose connections must be at accessible locations adjacent to usable stairs. Standpipes shall be extended as construction progresses to within one (1) floor of the highest point of construction having secured decking or flooring;
3. Stairways are required where the building is constructed to 50 feet or four (4) stories;
4. Required means of egress for existing buildings must be maintained during construction.

FIELD SET TFM# 21689-A, 21689-B, 21689-C PROJECT# 2025-11-03-04

Fire Prevention/State Fire Marshal's Office • 500 James Robertson Pkwy • 10th Floor, Davy Crockett Tower
Nashville, TN 37243-1162 • Tel: 615-741-7190 • Fax: 615-253-3267 • tn.gov/fire

THESE PLANS AND SPECIFICATIONS ARE REQUIRED TO BE KEPT ON THE JOB SITE UNTIL A FINAL CERTIFICATE OF OCCUPANCY OR PROJECT COMPLETION FORM IS ISSUED BY THIS OFFICE.
No alterations, deletions, additions or modifications of any kind are allowed to this approved set without written permission of this office.
TENNESSEE STATE FIRE MARSHAL'S OFFICE

TN Department of Commerce & Insurance

Inspection Information for Construction

FIELD SET TFM# 21689-A, 21689-B, 21689-C PROJECT# 2025-11-03-04

REVISIONS TO APPROVED PLANS

The building must be built according to the State Fire Marshal approved plans. Change orders, revisions, etc. that impact building, fire or life safety of the project cannot be made until the revisions are approved in writing and the plans are at the site.

INSPECTIONS

Contact your local SFMO inspector at least five (5) days prior to an inspection. Failure to schedule an inspection may result in costly repairs from exposing covered construction, or a Certificate of Occupancy not being issued. Inspections are required for:

1. **Foundation:** Inspections are required after poles or piers are set or trenches or basement areas are excavated and any required forms erected and any required reinforcing steel is in place and supported prior to the placing of concrete. The foundation inspection shall include excavations for thickened slabs intended for the support of bearing walls, partitions, structural supports, equipment and special requirements for wood foundations. Proper dimensions, installation and size of re-bar must be determined to be compliant by SFMO inspector or a 3rd party inspection service before pouring;
2. **Fire Sprinkler Underground:** Inspections are required after bedding, piping and thrust blocks prior to backfill. Hydro-static tests must be performed and documented. The SFMO inspector must witness the test unless other arrangements are made with the inspector;
3. **Framing:** Inspections are required after roof, framing, fire stopping, draft stopping, bracing, rough-in plumbing, rough-in mechanical and rough-in electrical are in place, and prior to covering walls or ceilings;
4. **Fire Rated Wall/Roof/Ceiling Assemblies:** Inspections are required after drywall, spray applied foam or other system are applied;
5. **Above-Ceiling:** Inspections are required before ceiling installation and after fire sprinkler, final mechanical, final plumbing, fire stopping systems, fire dampers, electrical fire rated wall/floor/ceiling assemblies are in place;
6. **Final:** Inspections are required after all work is complete. The contractor must provide a worker for operation of fire or smoke damper testing, duct mounted smoke detectors, fire alarm devices, test and balance of commercial kitchen hood and duct units, operation of smoke evacuation/management systems. All systems must be operational and the subcontractors must test all systems prior to the final inspection;
7. **Functional tests and documents needed to pass the final inspection** are:
    a. When required, foundation inspection reports performed by 3rd party inspection services;
    b. Final electrical inspection approval;
    c. Functional testing of generator used for life safety systems;
    d. Functional test of exit signs and emergency lighting to include all means of egress areas and exit discharge to public way. Functional testing to be observed by SFMO inspector;
    e. Boiler inspections and tagging;
    f. Functional test of commercial kitchen hood and duct and suppression systems to include: light test,

Fire Prevention/State Fire Marshal's Office • 500 James Robertson Pkwy • 10th Floor, Davy Crockett Tower
Nashville, TN 37243-1162 • Tel: 615-741-7190 • Fax: 615-253-3267 • tn.gov/fire

THESE PLANS AND SPECIFICATIONS ARE REQUIRED TO BE KEPT ON THE JOB SITE UNTIL A FINAL CERTIFICATE OF OCCUPANCY OR PROJECT COMPLETION FORM IS ISSUED BY THIS OFFICE.
No alterations, deletions, additions or modifications of any kind are allowed to this approved set without written permission of this office.
TENNESSEE STATE FIRE MARSHAL'S OFFICE

"puff" test, energy shut-down test, capture and containment test and air balance report. Functional testing to be observed by SFMO inspector;

g. Functional test of fire alarm and Fire Alarm and Emergency Communication System Inspection and Testing Form per 2010 NFPA 72. Functional testing to be observed by SFMO inspector;
h. Functional test of fire sprinkler system and test reports and documentation for underground and aboveground systems. Functional testing to be observed by SFMO inspector;
i. Functional test of fire pumps and standpipes and acceptance test reports and documentation. Functional testing to be observed by SFMO inspector;
j. Functional test of smoke control systems acceptance test reports and documentation. Functional testing to be observed by SFMO inspector;
k. Test and balance reports for commercial HVAC systems;
l. Functional testing of shut-down test for HVAC units where applicable. Functional testing to be observed by SFMO inspector;
m. Functional testing of access controlled or delayed egress door hardware. Functional testing to be observed by SFMO inspector;
n. Elevator approval and acceptance test reports from the state elevator inspector;
o. For premanufactured metal buildings or metal framed buildings, inspection reports of structural welds and fastening devices by 3rd party inspection services;
p. Emergency responder radio coverage: New buildings shall have approved radio coverage for emergency responders within the building based upon the existing coverage levels of the public safety communication systems of the jurisdiction at the exterior of the building. This shall not require improvement of the existing public safety communication systems. The test should be performed by the local fire department after interior and exterior walls and the roof are constructed;
q. Inspection test reports and documentation for applications of fire retardant coatings;
r. For gated communities, functional test of security gate or barrier showing they are capable of receiving signals from emergency responders and allowing access.

Disclaimer: This document was developed by the Code Enforcement Section of the Tennessee Department of Commerce and Insurance. To the best of our knowledge, information contained in this document is accurate and reliable as of the date of release; however, we do not assume any liability for the accuracy or completeness.

Department of Commerce and Insurance
Authorization No. 335485 • 0 copies • September, 2018
This public document was promulgated at a cost of $35.00

FIELD SET TFM# 21689-A, 21689-B, 21689-C PROJECT# 2025-11-03-04

THESE PLANS AND SPECIFICATIONS ARE REQUIRED TO BE KEPT ON THE JOB SITE UNTIL A FINAL CERTIFICATE OF OCCUPANCY OR PROJECT COMPLETION FORM IS ISSUED BY THIS OFFICE.
No alterations, deletions, additions or modifications of any kind are allowed to this approved set without written permission of this office.
TENNESSEE STATE FIRE MARSHAL'S OFFICE

THE RESERVES AT COBALT CIRCLE

NEW APARTMENTS

BROWNSVILLE, 24-3446 TENNESSEE

JonesGillamRenz

730 N. Ninth St.
Salina, KS 67401
785.827.0386

1881 Main St, Ste 301
Kansas City, MO 64108
jgr@jgrarchitects.com

MARGARET J. GILLAM — REGISTERED ARCHITECT — ASSOCIATE — No. 107366 — STATE OF TENNESSEE
3-5-2026

CONSULTANTS

Civil Engineer

Renaissance Group
9700 Village Circle, Suite 100
Lakeland, TN 38002
(901) 332-5533
wwooldridge@rgroup.biz

Mechanical & Electrical Engineer

LST Consulting Engineers, PA
4809 Vue Du Lac Place, Suite 301
Manhattan, KS 66503
(785) 587-8042
mail@LSTengineers.com

Structural Engineer

McClure Engineering Co.
2001 W. Broadway
Columbia, MO 65203
(573) 814-1568

TENNESSEE STATE FIRE MARSHAL ADOPTED CODES

2021 INTERNATIONAL BUILDING CODE
2021 FUEL GAS CODE
2021 INTERNATIONAL MECHANICAL CODE
2021 INTERNATIONAL PLUMBING CODE
2021 INTERNATIONAL FIRE CODE
2021 INTERNATIONAL ENERGY CONSERVATION CODE
2021 NFPA LIFE SAFETY CODE
2017 NATIONAL ELECTRIC CODE
FAIR HOUSING ACT DESIGN MANUAL
2010 ADA STANDARDS FOR ACCESSIBLE DESIGN
2017 ICC A117.1 ACCESSIBLE & USABLE BUILDINGS and FACILITIES

CITY OF BROWNSVILLE, TN ADOPTED CODES

2018 INTERNATIONAL BUILDING CODE
2018 INTERNATIONAL MECHANICAL CODE
2018 INTERNATIONAL PLUMBING CODE
2017 NATIONAL ELECTRIC CODE
2018 INTERNATIONAL FIRE CODE
2021 INTERNATIONAL ENERGY CONSERVATION CODE
FAIR HOUSING ACT DESIGN MANUAL
2010 ADA STANDARDS FOR ACCESSIBLE DESIGN
2009 ICC A117.1 ACCESSIBLE & USABLE BUILDINGS and FACILITIES

NOTE: CODE FOOT PRINT AND LIFE SAFETY PLANS ARE FOLLOWING ON SHEETS CFP1 AND CFP2. UNLESS NOTED OTHERWISE (WITH AN *), THE PLANS AND DESIGNS FOLLOW THE MORE STRINGENT OF THE CODES AS LISTED ABOVE. THUS, THE DESIGNS FOLLOW THE 2021 CODES AS LISTED UNDER THE STATE FIRE MARSHAL ON RARE OCCASSION. THE DESIGNS MAY FOLLOW THE 2018 CODES AS LISTED UNDER BROWNSVILLE. THESE INSTANCES WILL BE NOTED AS SUCH.

REFERENCE LEGEND

- 1–A1 — DETAIL REFERENCE REF # – SHT. #
- A–A1 SIM — DETAIL REFERENCE REF # – SHT #
- 100'–0" FIN. FLR. — ELEVATION DESIGNATION
- 1 — REVISIONS
- WAITING 101 — ROOM NAME & NUMBER
- A–A1 — PROJECTED VIEW OF PHOTOGRAPH REF # – SHT. #
- A — DOOR MARK
- A — WINDOW MARK
- CUT LINE
- PROJECT NORTH
- TRUE NORTH
- A DETAIL SCALE — DRAWING NAME, DRAWING SCALE, DRAWING REF #

SFMO APPROVAL STAMPS

FIRE STOPPING REQUIREMENT

Fire stopping methods and materials employed on the job site may not deviate from the approved systems detailed within this approved set.

OCCUPANT NOTIFICATION

Occupant notification shall be in accordance with IFC 907.2.7.1 and/or NFPA 101 9.6.3 with respect to type and number as required by applicable codes. The location of devices shall be installed per NFPA 72.

SHEET INDEX

GENERAL

CFP1 CODE FOOTPRINT
CFP2 CODE FOOTPRINT
CFP3 CODE FOOTPRINT
ADA ADA DIAGRAMS
FH FAIR HOUSING
ANSI1 ANSI ACCESSIBILITY STANDARDS
ANSI2 ANSI ACCESSIBILITY STANDARDS
ANSI3 ANSI ACCESSIBILITY STANDARDS

ARCHITECTURAL

A1.1 SITE PLAN
A1.2 ENLARGED PLANS & DETAILS
A1.3 ENLARGED PLANS & DETAILS
A1.4 ENLARGED PLANS & DETAILS
A1.5 ENLARGED PLANS & DETAILS
A2.1 BUILDING A & CLUBHOUSE FLOOR PLANS
A2.2B BUILDING B FLOOR PLANS
A2.2C BUILDING C FLOOR PLANS
A2.3 1–BEDROOM UNIT PLANS
A2.4 2–BEDROOM UNIT PLANS
A2.5 3–BEDROOM UNIT PLANS
A2.6 ACCESSIBLE 1–BEDROOM ENLARGED BATH PLANS & INTERIOR ELEVATIONS
A2.7 ACCESSIBLE 2/3–BEDROOM ENLARGED BATH PLANS & INTERIOR ELEVATIONS
A2.8 ADAPTABLE/STANDARD 1–BEDROOM ENLARGED BATH PLANS, INTERIOR ELEVATIONS & SECTIONS
A2.9 ADAPTABLE 2/3–BEDROOM ENLARGED BATH PLANS INTERIOR ELEVATIONS
A2.10 STANDARD 2/3–BEDROOM ENLARGED BATH PLANS & INTERIOR ELEVATIONS
A2.11 CLUBHOUSE PLAN & SCHEDULES
A2.12 CLUBHOUSE ENLARGED PLANS & DETAILS
A3.1 BUILDING A – EXTERIOR ELEVATIONS
A3.2 BUILDING B – EXTERIOR ELEVATIONS
A3.3 BUILDINGS A, B & C – EXTERIOR ELEVATIONS
A3.4 BUILDING C – EXTERIOR ELEVATIONS
A4.1 TYPICAL WALL SECTIONS
A4.2 TYPICAL WALL SECTIONS
A4.3 TYPICAL WALL SECTIONS
A4.4 DETAILS
A4.5 DETAILS
A4.6 ENTRY SECTIONS & DETAILS
A4.7 CLUBHOUSE SECTIONS & DETAILS
A4.8 CLUBHOUSE SECTIONS & DETAILS
A4.9 FIRE–PENTRATION DETAILS
A4.10 MANUFACTURED STONE DETAILS
A4.11 HARDI PANEL SIDING DETAILS
A5.1 ROOF PLANS
A5.1C ROOF PLANS
A5.2 ROOF DETAILS & STAIR SECTIONS
A6.1 STAIR SECTION & ENLARGED PLANS
A7.1 APARTMENT REFLECTED CEILING PLANS

STRUCTURAL

S001 GENERAL NOTES
S002 GENERAL NOTES
S003 SCHEDULES
S101 BLDG A – FOUNDATION PLAN
S102 BLDG A – LEVEL 2 PLAN
S103 BLDG A – LEVEL 3 PLAN
S104 BLDG A – ROOF PLAN
S105 BLDG B – FOUNDATION PLAN
S106 BLDG B – LEVEL 2 PLAN
S107 BLDG B – LEVEL 3 PLAN
S108 BLDG B – ROOF PLAN
S109 BLDG C – FOUNDATION PLAN
S110 BLDG C – LEVEL 2 PLAN
S111 BLDG C – LEVEL 3 PLAN
S112 BLDG C – ROOF PLAN
S500 FOUNDATION DETAILS
S501 FOUNDATION DETAILS
S505 TYPICAL WOOD DETAILS
S510 FRAMING DETAILS
S511 FRAMING DETAILS
S520 ROOF DETAILS
S521 ROOF DETAILS
S530 SHEAR WALL DETAILS

ELECTRICAL

ME1.0 M/E SITE PLAN
E0.1 ELECTRICAL ABBREVIATIONS, LEGENDS, NOTES
E1.1 BUILDING A – 1ST & 2ND FLOOR POWER PLANS
E1.2 BUILDING A – 3RD FLOOR POWER PLAN
E1.3 BUILDING B – 1ST & 2ND FLOOR POWER PLANS
E1.4 BUILDING B – 3RD FLOOR POWER PLAN
E1.5 BUILDING C – 1ST & 2ND FLOOR POWER PLANS
E1.6 BUILDING C – 3RD FLOOR POWER PLAN
E4.1 APARTMENT & CLUBHOUSE POWER PLANS
E6.1 LIGHTING DIAGRAMS & LIGHTING SCHEDULE
E6.2 PANEL SCHEDULES & RISER DIAGRAMS
E6.3 PANEL SCHEDULES

MECHANICAL/PLUMBING

M0.1 HVAC ABBREVIATIONS, LEGENDS, NOTES
M1.1 BUILDING A – 1ST & 2ND FLOOR HVAC PLANS
M1.2 BUILDING A – 3RD FLOOR HVAC PLAN
M1.3 BUILDING B – 1ST & 2ND HVAC PLANS
M1.4 BUILDING B – 3RD FLOOR HVAC PLAN
M1.5 BUILDING C – 1ST & 2ND HVAC PLANS
M1.6 BUILDING C – 3RD FLOOR HVAC PLAN
M4.1 ENLARGED 1st/2nd FLOOR APARTMENT HVAC PLANS
M4.2 ENLARGED 3rd FLOOR APARTMENT HVAC PLANS
M6.1 SCHEDULES AND DETAILS
P0.1 PLUMBING ABBREVIATIONS, LEGENDS, NOTES
P1.1 BUILDING A – UNDERFLOOR & 1ST FLOOR WASTE & VENT PLANS
P1.2 BUILDING A – 2ND & 3RD FLOOR WASTE & VENT PLANS
P1.3 BUILDING B – UNDERFLOOR & 1ST FLOOR WASTE & VENT PLANS
P1.4 BUILDING B – 2ND & 3RD FLOOR WASTE & VENT PLANS
P1.5 BUILDING C – UNDERFLOOR & 1ST FLOOR WASTE & VENT PLANS
P1.6 BUILDING C – 2ND & 3RD FLOOR WASTE & VENT PLANS
P1.7 BUILDING A & B – FIRST FLOOR DOMESTIC WATER PLANS
P1.8 BUILDING C – FIRST FLOOR DOMESTIC WATER PLANS
P4.1 ENLARGED APARTMENT DOMESTIC WATER PLANS
P4.2 ENLARGED APARTMENT & CLUBHOUSE DOMESTIC WATER PLANS
P6.1 SCHEDULES AND DETAILS
P9.1 WASTE & VENT RISER DIAGRAMS
P9.2 WASTE & VENT RISER DIAGRAMS
P9.3 APARTMENT WATER SERVICE RISER DIAGRAMS

FIRE SPRINKLER DESIGN

DS.1 BUILDING A – DESIGN INTEND DRAWINGS AND SPECS
DS.2 BUILDING B – DESIGN INTEND DRAWINGS AND SPECS
DS.3 BUILDING C – DESIGN INTEND DRAWINGS AND SPECS

CONSTRUCTION SET (thru ASI 12) 3-5-2026

FIELD SET TFM# 21689-A, 21689-B, 21689-C PROJECT# 2025-11-03-04

THESE PLANS AND SPECIFICATIONS ARE REQUIRED TO BE KEPT ON THE JOB SITE UNTIL A FINAL CERTIFICATE OF OCCUPANCY OR PROJECT COMPLETION FORM IS ISSUED BY THIS OFFICE.

No alterations, deletions, additions or modifications of any kind are allowed on approved set without written approval of this office.

TENNESSEE STATE FIRE MARSHAL'S OFFICE

SCOPE OF WORK

START AT FLANGE INSIDE OF FIRE RISER ROOM AND PROVIDE NEW AUTOMATIC WET-PIPE FIRE PROTECTION SPRINKLER SYSTEM THROUGHOUT EACH NEW BUILDING.

BUILDING DATA

NFPA STANDARD: NFPA 13-2019, NFPA 13R-2019

OCCUPANCY GROUP: R-2 (RESIDENTIAL), B (BUSINESS)

NO. OF STORIES: 3

PEAK BUILDING HEIGHT: 42'-2"

CONSTRUCTION TYPE: V-B

GENERAL NOTES

1. ALL SPRINKLER PIPING DESIGN, INSTALLATION, AND TESTING SHALL COMPLY WITH NFPA 13 AND NFPA 13R
2. PIPING SHALL BE SEISMICALLY BRACED.
3. ALL EQUIPMENT SHALL BE UL LISTED AND/OR FM APPROVED FOR THIS INTENDED APPLICATION.
4. FIRE PROTECTION DESIGNER SHALL COORDINATE LOCATION OF ALL SPRINKLERS AND PIPING WITH STRUCTURAL ELEMENTS, MECHANICAL, PLUMBING, ELECTRICAL EQUIPMENT, AND CEILING CONFIGURATION.
5. ALL ELECTRICAL COMPONENTS SHALL BE INSTALLED IN ACCORDANCE WITH NFPA 70 AND NFPA 72.
6. SPRINKLERS SHALL BE CENTERED IN CEILING TILES THROUGHOUT ALL FINISHED SPACES WHERE APPLICABLE.
7. ALL PIPING SUBJECT TO TEMPERATURES BELOW 40 F SHALL BE DRY-TYPE OR HAVE OTHER ADEQUATE MEANS OF FREEZE PROTECTION. DRY-TYPE SYSTEMS SHOULD HAVE A DESIGN AREA INCREASE OF 30%.
8. ALL LOW POINTS IN DRY SYSTEMS SHALL HAVE A DRUM DRIP.
9. TAMPER SWITCHES SHALL BE INSTALLED ON ALL VALVES REQUIRED TO BE SUPERVISED
10. WATER FLOW SWITCHES IN DRY SYSTEMS SHALL BE OF THE PRESSURE-TYPE.
11. FDC CONNECTION TO BE 4" STORZ TYPE.
12. SYSTEM DESIGN PRESSURE SHALL BE 175 PSIG

LIGHT HAZARD DESIGN CRITERIA

AREAS: COMMON AREAS, OFFICES

SYSTEM TYPE: WET

DESIGN DENSITY: 0.10 GPM/SQ. FT.

DESIGN AREA: 1,500 SQ. FT.

HOSE STREAM ALLOWANCE: 100 GPM

ORDINARY HAZARD GROUP 1 CRITERIA

AREAS: MECHANICAL ROOMS, STORAGE

SYSTEM TYPE: WET

DESIGN DENSITY: 0.15 GPM/SQ. FT.

DESIGN AREA: 1,500 SQ. FT.

HOSE STREAM ALLOWANCE: 100 GPM

RESIDENTIAL DESIGN CRITERIA

RESIDENTIAL AREAS

SYSTEM TYPE: WET

DESIGN DENSITY: 0.05 GPM/SQ. FT.

HOSE STREAM ALLOWANCE: 100 GPM

MATERIAL REQUIREMENTS

- ALL PIPING AND COMPONENTS SHALL BE RATED FOR A PRESSURE THAT EXCEEDS THE THE DESIGN PRESSURE OF THE SYSTEM.
- ALL PIPING SHALL BE SCH 40 OR SCHEDULE 10 BLACK STEEL ASTM A53, A135, OR A795 WITH MIC COATING UNLESS ALLOWED BY NFPA 13R 6.2.2.
- CPVC PIPING IN ACCORDANCE WITH NFPA 13R IS ALLOWED FOR RESIDENTIAL AND LIGHT HAZARD OCCUPANCIES
- ALL SYSTEM COMPONENTS, PIPE, AND FITTINGS SHALL BE NEW AND UL LISTED OR FM APPROVED.

WATER SUPPLY DATA

FLOW TEST PERFORMED BY JACKSON PETTIGREW OF BROWNSVILLE ENERGY AUTHORITY. CONTRACTOR TO REQUEST LOCATION OF STATIC AND RESIDUAL HYDRANTS FOR HYDRAULIC CALCULATIONS.
TEST DATE: 3-17-2025

- STATIC: 68 PSI
- RESIDUAL: 52 PSI
- FLOW: 1,000 GPM

SEISMIC DESIGN CRITERIA

THE PROJECT IS LOCATED IN A SEISMIC ZONE AND FIRE PROTECTION SYSTEM SHALL BE DESIGNED TO WITHSTAND DAMAGE AGAINST EARTHQUAKES IN ACCORDANCE WITH NFPA 13.
SEISMIC DESIGN PARAMETERS:

- Ss = 0.902
- S1: 0.318g
- Sds: 0.685g
- Sd1: 0.34
- Design Category: D

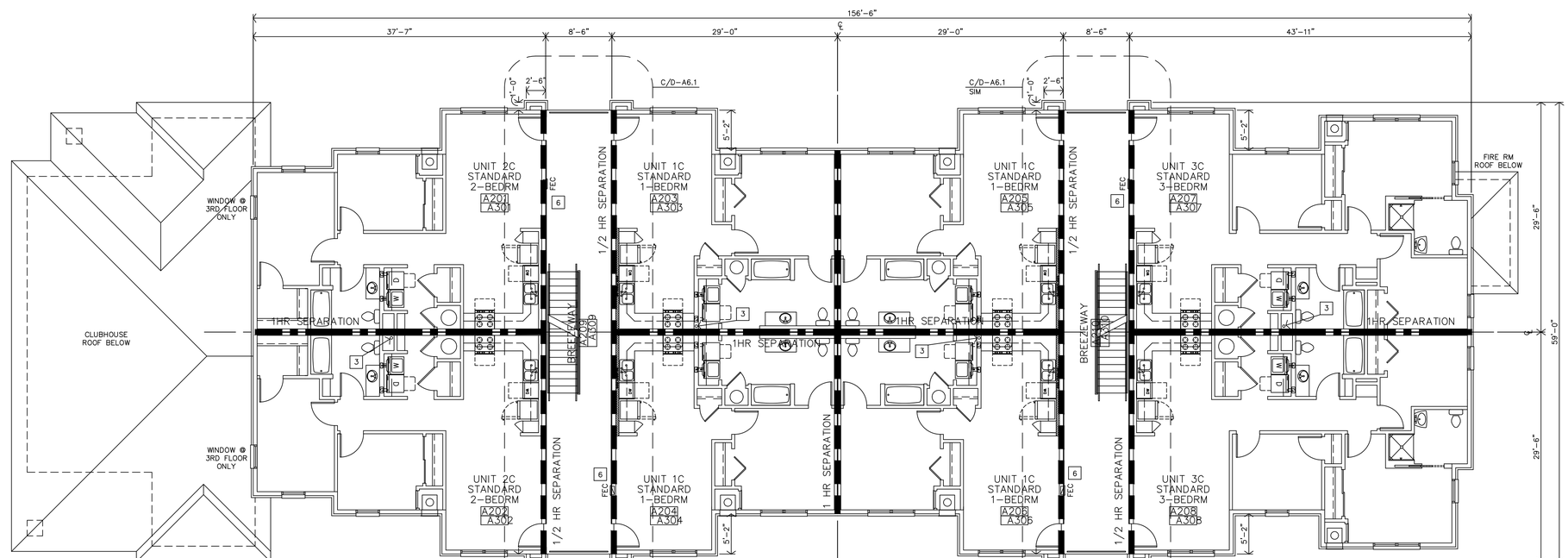

B **BUILDING A SECOND FLOOR PLAN THIRD FLOOR PLAN (SIM)**
1/8"=1'-0"

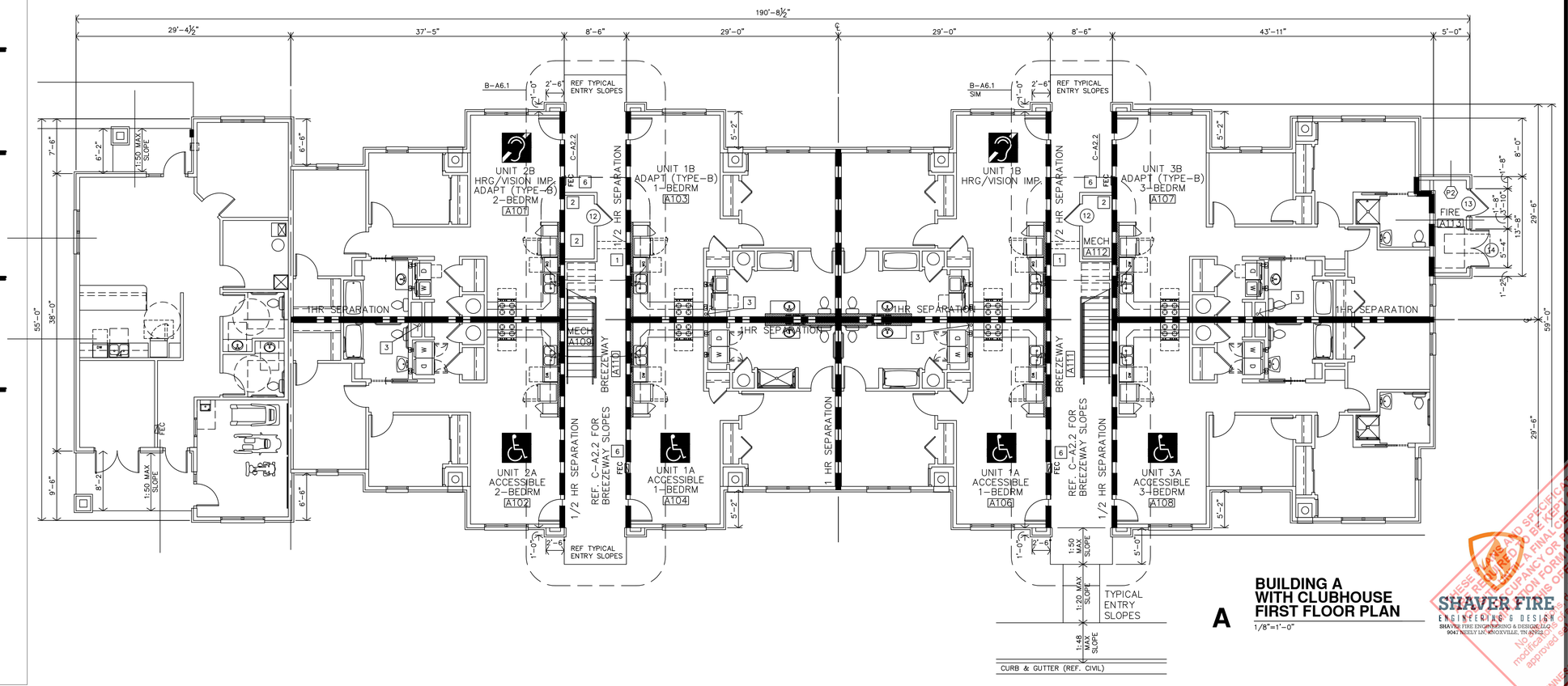

A **BUILDING A WITH CLUBHOUSE FIRST FLOOR PLAN**
1/8"=1'-0"

JonesGillamRenz
730 N. Ninth 1881 Main Street, Suite 301
Salina, KS 67401 Kansas City, MO 64108
785.827.0386 jgr@jgrarchitects.com

JGR

THE RESERVES AT COBALT CIRCLE
NEW APARTMENTS
BROWNSVILLE, TENNESSEE

FIELD SET TFM# 21689-A, 21689-B, 21689-C PROJECT# 2025-11-03-04

DERRICK A. SHAVER REGISTERED ENGINEER STATE OF TENNESSEE 115346 2/11/26

REVISION: 0

DATE: 2/11/26
JOB: 24-3446
SHEET NO.: FP DESIGN INTENT BLDG A
DS.1

THESE PLANS AND SPECIFICATIONS ARE NOT RELEASED FOR CONSTRUCTION, BIDDING OR PERMIT PURPOSES. THEY ARE RELEASED AS A FINAL CONFIRMATION OF INFORMATION ONLY AND SHALL NOT BE USED FOR REGULATORY APPROVAL, PERMITTING, BIDDING OR CONSTRUCTION PURPOSES UNLESS SPECIFICALLY ISSUED FOR SUCH PURPOSES BY THE ENGINEER'S OFFICE.
SHAVER FIRE ENGINEERING & DESIGN
SHAVER FIRE ENGINEERING & DESIGN, LLC
9047 NEELY LN, KNOXVILLE, TN 37923
NO CHANGES OR MODIFICATIONS may be made to these plans without the prior written consent of the ENGINEER'S OFFICE. actions by TENNESSEE STATE LAW. Any modifications to this approved set of plans
COPYRIGHT©

SCOPE OF WORK

START AT FLANGE INSIDE OF FIRE RISER ROOM AND PROVIDE NEW AUTOMATIC WET-PIPE FIRE PROTECTION SPRINKLER SYSTEM THROUGHOUT EACH NEW BUILDING.

BUILDING DATA

NFPA STANDARD: NFPA 13-2019, NFPA 13R-2019

OCCUPANCY GROUP: R-2 (RESIDENTIAL), B (BUSINESS)

NO. OF STORIES: 3

PEAK BUILDING HEIGHT: 42'-2"

CONSTRUCTION TYPE: V-B

GENERAL NOTES

1. ALL SPRINKLER PIPING DESIGN, INSTALLATION, AND TESTING SHALL COMPLY WITH NFPA 13 AND NFPA 13R
2. PIPING SHALL BE SEISMICALLY BRACED.
3. ALL EQUIPMENT SHALL BE UL LISTED AND/OR FM APPROVED FOR THIS INTENDED APPLICATION.
4. FIRE PROTECTION DESIGNER SHALL COORDINATE LOCATION OF ALL SPRINKLERS AND PIPING WITH STRUCTURAL ELEMENTS, MECHANICAL, PLUMBING, ELECTRICAL EQUIPMENT, AND CEILING CONFIGURATION.
5. ALL ELECTRICAL COMPONENTS SHALL BE INSTALLED IN ACCORDANCE WITH NFPA 70 AND NFPA 72.
6. SPRINKLERS SHALL BE CENTERED IN CEILING TILES THROUGHOUT ALL FINISHED SPACES WHERE APPLICABLE.
7. ALL PIPING SUBJECT TO TEMPERATURES BELOW 40 F SHALL BE DRY-TYPE OR HAVE OTHER ADEQUATE MEANS OF FREEZE PROTECTION. DRY-TYPE SYSTEMS SHOULD HAVE A DESIGN AREA INCREASE OF 30%.
8. ALL LOW POINTS IN DRY SYSTEMS SHALL HAVE A DRUM DRIP.
9. TAMPER SWITCHES SHALL BE INSTALLED ON ALL VALVES REQUIRED TO BE SUPERVISED
10. WATER FLOW SWITCHES IN DRY SYSTEMS SHALL BE OF THE PRESSURE-TYPE.
11. FDC CONNECTION TO BE 4" STORZ TYPE.
12. SYSTEM DESIGN PRESSURE SHALL BE 175 PSIG

LIGHT HAZARD DESIGN CRITERIA

AREAS: COMMON AREAS, OFFICES

SYSTEM TYPE: WET

DESIGN DENSITY: 0.10 GPM/SQ. FT.

DESIGN AREA: 1,500 SQ. FT.

HOSE STREAM ALLOWANCE: 100 GPM

ORDINARY HAZARD GROUP 1 CRITERIA

AREAS: MECHANICAL ROOMS, STORAGE

SYSTEM TYPE: WET

DESIGN DENSITY: 0.15 GPM/SQ. FT.

DESIGN AREA: 1,500 SQ. FT.

HOSE STREAM ALLOWANCE: 100 GPM

RESIDENTIAL DESIGN CRITERIA

RESIDENTIAL AREAS

SYSTEM TYPE: WET

DESIGN DENSITY: 0.05 GPM/SQ. FT.

HOSE STREAM ALLOWANCE: 100 GPM

MATERIAL REQUIREMENTS

- ALL PIPING AND COMPONENTS SHALL BE RATED FOR A PRESSURE THAT EXCEEDS THE THE DESIGN PRESSURE OF THE SYSTEM.
- ALL PIPING SHALL BE SCH 40 OR SCHEDULE 10 BLACK STEEL ASTM A53, A135, OR A795 WITH MIC COATING UNLESS ALLOWED BY NFPA 13R 5.2.2.
- CPVC PIPING IN ACCORDANCE WITH NFPA 13R IS ALLOWED FOR RESIDENTIAL AND LIGHT HAZARD OCCUPANCIES
- ALL SYSTEM COMPONENTS, PIPE, AND FITTINGS SHALL BE NEW AND UL LISTED OR FM APPROVED.

WATER SUPPLY DATA

FLOW TEST PERFORMED BY JACKSON PETTIGREW OF BROWNSVILLE ENERGY AUTHORITY. CONTRACTOR TO REQUEST LOCATION OF STATIC AND RESIDUAL HYDRANTS FOR HYDRAULIC CALCULATIONS.
TEST DATE: 3-17-2025

- STATIC: 68 PSI
- RESIDUAL: 52 PSI
- FLOW: 1,000 GPM

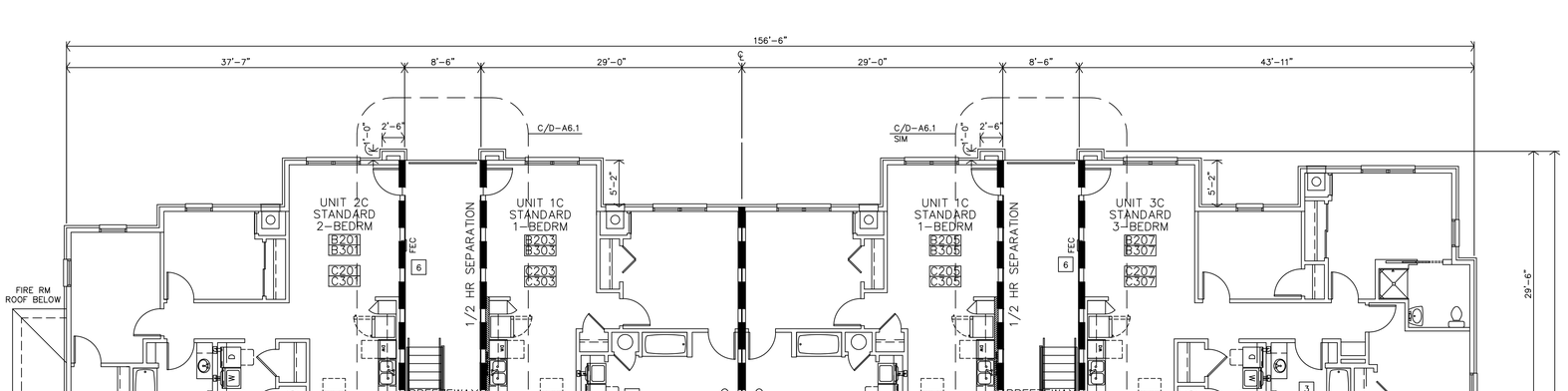

B **BUILDING B SECOND FLOOR PLAN THIRD FLOOR PLAN (SIM)**
1/8"=1'-0"

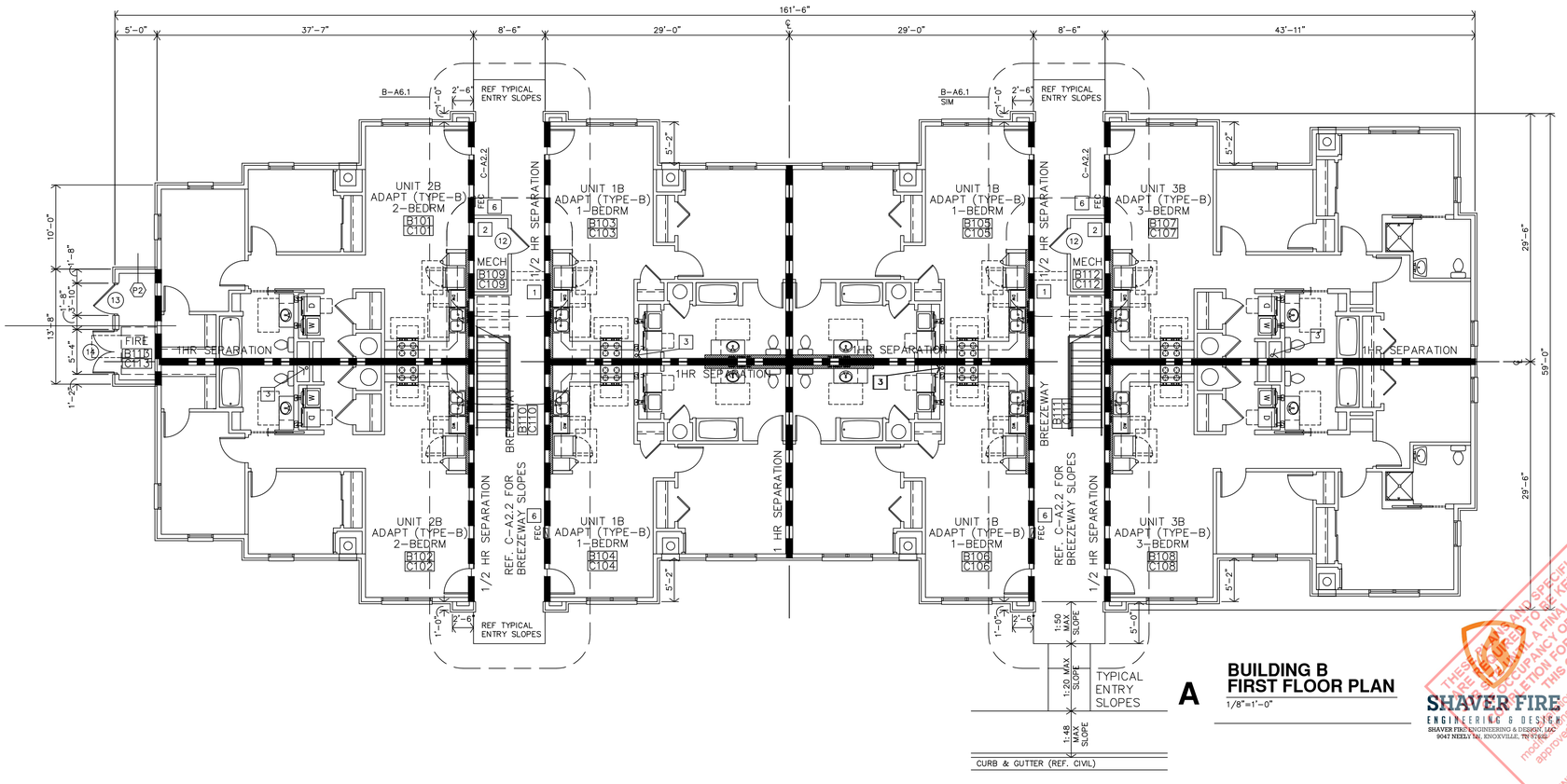

A **BUILDING B FIRST FLOOR PLAN**
1/8"=1'-0"

JonesGillamRenz
730 N. Ninth 1881 Main Street, Suite 301
Salina, KS 67401 Kansas City, MO 64108
785.827.0386 jgr@jgrarchitects.com

JGR

THE RESERVES AT COBALT CIRCLE
NEW APARTMENTS
BROWNSVILLE, TENNESSEE

FIELD SET TFM# 21689-A, 21689-B, 21689-C PROJECT# 2025-11-03-04

DERRICK A. SHAVER — REGISTERED ENGINEER — AGRICULTURE — STATE OF TENNESSEE — 2/11/26

THESE PLANS AND SPECIFICATIONS ARE REQUIRED TO BE KEPT ON SITE UNTIL A FINAL CERTIFICATE OF OCCUPANCY OR COMPLETION FORM IS ISSUED BY THIS OFFICE. ALL CHANGES, ADDINGS OR DELETIONS TO THESE PLANS MUST BE APPROVED BY THIS OFFICE. TENNESSEE STATE FIRE MARSHAL'S OFFICE

REVISION: 0

DATE: 2/11/26
JOB: 24-3446
SHEET NO.:
FP DESIGN INTENT BLDG B
DS.2

SHAVER FIRE ENGINEERING & DESIGN
SHAVER FIRE ENGINEERING & DESIGN, LLC
9047 NEELY LN, KNOXVILLE, TN 37931

COPYRIGHT©

SCOPE OF WORK

START AT FLANGE INSIDE OF FIRE RISER ROOM AND PROVIDE NEW AUTOMATIC WET-PIPE FIRE PROTECTION SPRINKLER SYSTEM THROUGHOUT EACH NEW BUILDING.

BUILDING DATA

NFPA STANDARD: NFPA 13-2019, NFPA 13R-2019

OCCUPANCY GROUP: R-2 (RESIDENTIAL), B (BUSINESS)

NO. OF STORIES: 3

PEAK BUILDING HEIGHT: 42'-2"

CONSTRUCTION TYPE: V-B

GENERAL NOTES

1. ALL SPRINKLER PIPING DESIGN, INSTALLATION, AND TESTING SHALL COMPLY WITH NFPA 13 AND NFPA 13R
2. PIPING SHALL BE SEISMICALLY BRACED.
3. ALL EQUIPMENT SHALL BE UL LISTED AND/OR FM APPROVED FOR THIS INTENDED APPLICATION.
4. FIRE PROTECTION DESIGNER SHALL COORDINATE LOCATION OF ALL SPRINKLERS AND PIPING WITH STRUCTURAL ELEMENTS, MECHANICAL, PLUMBING, ELECTRICAL EQUIPMENT, AND CEILING CONFIGURATION.
5. ALL ELECTRICAL COMPONENTS SHALL BE INSTALLED IN ACCORDANCE WITH NFPA 70 AND NFPA 72.
6. SPRINKLERS SHALL BE CENTERED IN CEILING TILES THROUGHOUT ALL FINISHED SPACES WHERE APPLICABLE.
7. ALL PIPING SUBJECT TO TEMPERATURES BELOW 40 F SHALL BE DRY-TYPE OR HAVE OTHER ADEQUATE MEANS OF FREEZE PROTECTION. DRY-TYPE SYSTEMS SHOULD HAVE A DESIGN AREA INCREASE OF 30%.
8. ALL LOW POINTS IN DRY SYSTEMS SHALL HAVE A DRUM DRIP.
9. TAMPER SWITCHES SHALL BE INSTALLED ON ALL VALVES REQUIRED TO BE SUPERVISED
10. WATER FLOW SWITCHES IN DRY SYSTEMS SHALL BE OF THE PRESSURE-TYPE.
11. FDC CONNECTION TO BE 4" STORZ TYPE.
12. SYSTEM DESIGN PRESSURE SHALL BE 175 PSIG

LIGHT HAZARD DESIGN CRITERIA

AREAS: COMMON AREAS, OFFICES

SYSTEM TYPE: WET

DESIGN DENSITY: 0.10 GPM/SQ. FT.

DESIGN AREA: 1,500 SQ. FT.

HOSE STREAM ALLOWANCE: 100 GPM

ORDINARY HAZARD GROUP 1 CRITERIA

AREAS: MECHANICAL ROOMS, STORAGE

SYSTEM TYPE: WET

DESIGN DENSITY: 0.15 GPM/SQ. FT.

DESIGN AREA: 1,500 SQ. FT.

HOSE STREAM ALLOWANCE: 100 GPM

RESIDENTIAL DESIGN CRITERIA

RESIDENTIAL AREAS

SYSTEM TYPE: WET

DESIGN DENSITY: 0.05 GPM/SQ. FT.

HOSE STREAM ALLOWANCE: 100 GPM

MATERIAL REQUIREMENTS

- ALL PIPING AND COMPONENTS SHALL BE RATED FOR A PRESSURE THAT EXCEEDS THE THE DESIGN PRESSURE OF THE SYSTEM.
- ALL PIPING SHALL BE SCH 40 OR SCHEDULE 10 BLACK STEEL ASTM A53, A135, OR A795 WITH MIC COATING UNLESS ALLOWED BY NFPA 13R 5.2.2.
- CPVC PIPING IN ACCORDANCE WITH NFPA 13R IS ALLOWED FOR RESIDENTIAL AND LIGHT HAZARD OCCUPANCIES
- ALL SYSTEM COMPONENTS, PIPE, AND FITTINGS SHALL BE NEW AND UL LISTED OR FM APPROVED.

WATER SUPPLY DATA

FLOW TEST PERFORMED BY JACKSON PETTIGREW OF BROWNSVILLE ENERGY AUTHORITY. CONTRACTOR TO REQUEST LOCATION OF STATIC AND RESIDUAL HYDRANTS FOR HYDRAULIC CALCULATIONS.
TEST DATE: 3-17-2025

- STATIC: 68 PSI
- RESIDUAL: 52 PSI
- FLOW: 1,000 GPM

SEISMIC DESIGN CRITERIA

THE PROJECT IS LOCATED IN A SEISMIC ZONE AND FIRE PROTECTION SYSTEM SHALL BE DESIGNED TO WITHSTAND DAMAGE AGAINST EARTHQUAKES IN ACCORDANCE WITH NFPA 13.
SEISMIC DESIGN PARAMETERS:

- Ss = 0.902
- S1: 0.318g
- Sds: 0.685g
- Sd1: 0.34
- Design Category: D

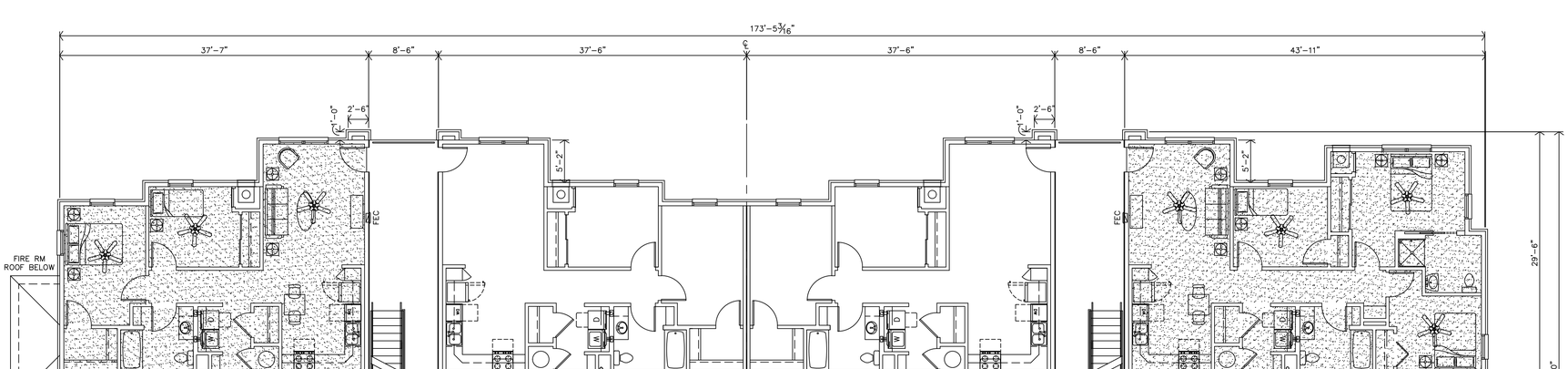

B **BUILDING C SECOND FLOOR PLAN THIRD FLOOR PLAN (SIM)**
1/8"=1'-0"

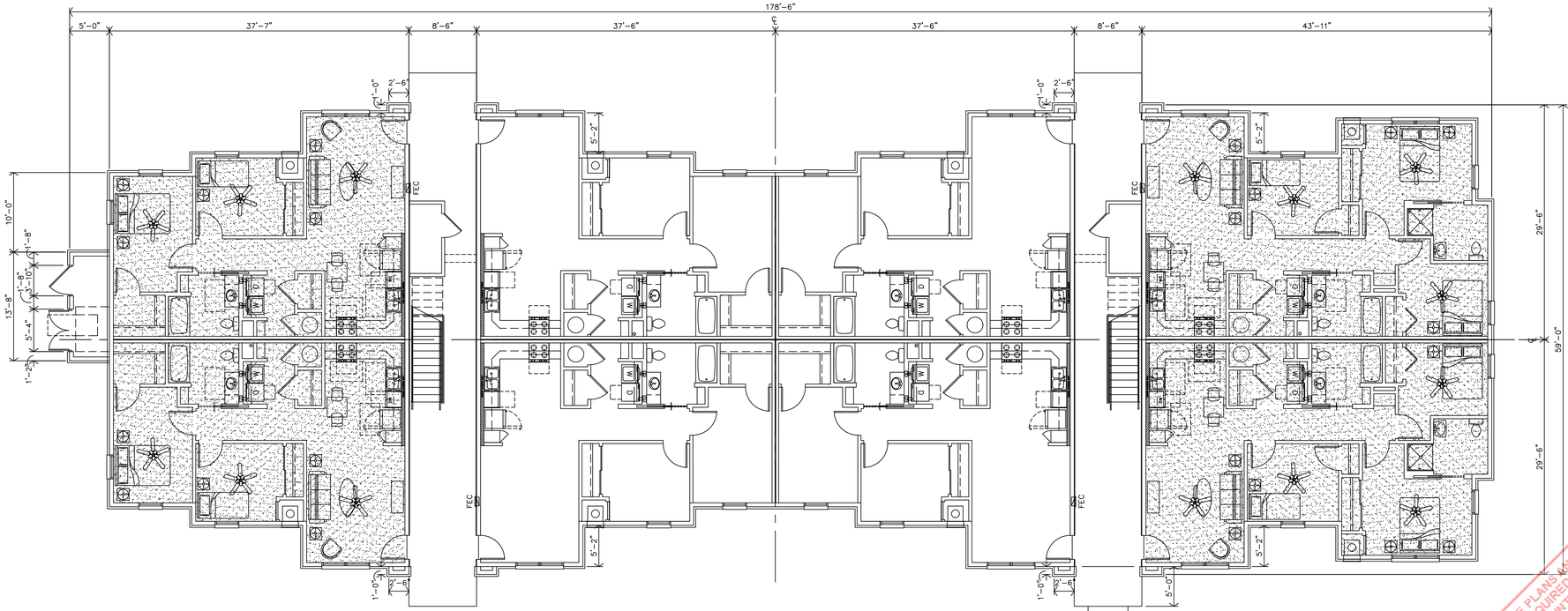

A **BUILDING C FIRST FLOOR PLAN**
1/8"=1'-0"

JonesGillamRenz
730 N. Ninth 1881 Main Street, Suite 301
Salina, KS 67401 Kansas City, MO 64108
785.827.0386 jgr@jgrarchitects.com

THE RESERVES AT COBALT CIRCLE

NEW APARTMENTS

BROWNSVILLE, TENNESSEE

FIELD SET TFM# 21689-A, 21689-B, 21689-C PROJECT# 2025-11-03-04

DERRICK A. SHAVER — REGISTERED ENGINEER — STATE OF TENNESSEE — AGRICULTURE

2/11/26

REVISION: 0

DATE: 2/11/26
JOB: 24-3446
SHEET NO.:
FP DESIGN INTENT BLDG C
DS.3

THESE PLANS AND SPECIFICATIONS ARE NOT TO BE USED FOR CONSTRUCTION UNTIL A FINAL CERTIFICATE OF OCCUPANCY OR CERTIFICATE OF COMPLETION FOR THIS PROJECT IS ISSUED BY THIS OFFICE.
No alterations, additions or modifications are to be made to these plans without the prior written approval of this office. A permit fee will be charged for each plan review.
TENNESSEE STATE FIRE MARSHAL'S OFFICE
SHAVER FIRE ENGINEERING & DESIGN
SHAVER FIRE ENGINEERING & DESIGN, LLC
9047 NESLY LN, KNOXVILLE, TN 37923
COPYRIGHT©

Department of Commerce & Insurance

Date: 03/05/2026

To: Margaret Gillam
Jones Gillam Renz Architects
730 N. Ninth Street
Salina, KS 67401

RE: Approval of Plans (AG-Sprinkler Shop Drawings)
The Reserves at Cobalt Circle
1616 E. Jefferson
Brownsville, TN 38012

TFM # 21689-A
21689-B
21689-C
Project # 2025-11-03-04
County: Haywood

Dear Margaret Gillam,

The construction documents submitted to our office for the above referenced project have been reviewed for compliance with the minimum standards for fire prevention, fire protection, and building construction safety of the *Rules of Tennessee Department of Commerce and Insurance, Division of Fire Prevention, Chapter 0780-02-02, Codes and Standards*.

This is not a public building. Therefore, it is not subject to Tenn. Code Ann. § 68-120-201, et seq., the Tennessee Public Building Accessibility Act. It has not been reviewed for compliance with the 2010 ADA Standards for Accessible Design. It has not been reviewed for compliance with the Americans with Disabilities Act.

Plans are approved. (AG- Sprinkler Shop Drawings) The following stipulation has been removed.

~~*Stipulation:*~~

~~Complete sprinkler shop drawings with calculations and manufacturer cut sheets showing listing of fire protection systems must be submitted by a Tennessee registered sprinkler system contractor for review and approval prior to installation in accordance with Rule 0780-02-07-.09. The sprinkler shop drawings, calculations, & manufacture's cut sheet package must be reviewed and approved by the fire protection engineer of record (processed with the engineers shop drawing review stamp) prior to the submittal to the State Fire Marshal's Office. All piping from the *point of service* including underground used for sprinkler or standpipe must be installed by a Tennessee registered sprinkler contractor. Rule 0780-02-07-.08~~

No approval of plans, or failure to review, plans, and specifications by the Division shall relieve the owner, developer, contractor, or designing architect or engineer of their respective responsibilities

FIELD SET TFM# 21689-A,21689-B,21689-C PROJECT# 2025-11-03-04

THESE PLANS AND SPECIFICATIONS ARE REQUIRED TO BE KEPT ON THE JOB SITE UNTIL A FINAL CERTIFICATE OF OCCUPANCY OR PROJECT COMPLETION FORM IS ISSUED BY THIS OFFICE.
No alterations, deletions, additions or modifications of any kind are allowed to this approved set without written permission of this office.
TENNESSEE STATE FIRE MARSHAL'S OFFICE

for compliance with applicable codes respecting fire prevention, fire protection, and building construction. Rule *0780-02-03-.05.*

Approved plans are available electronically at https://apps.tn.gov/tnsfmo/. They must be printed with all markups and stamps and placed at the project site prior to construction. They shall be available to the State Fire Marshal's Office inspector and retained until a CO has been issued by the Division. Failure to have the plans at the site and available to the inspector may be grounds for a Stop Work Order to be issued. Rule 0780-02-03-.05.

All subsequent construction document revisions that impact the approved plan's fire prevention, fire protection, or building construction safety must be submitted to this office for review and approval.

New buildings shall have approved radio coverage for emergency responders within the building based upon the existing coverage levels of the public safety communication systems of the jurisdiction at the exterior of the building. Emergency responder radio coverage must be verified in the field prior to the issuance of a CO. The test should be performed by the local fire department after interior and exterior walls and the roof are constructed.

The project's contractor must contact the Tennessee State Fire Marshal's Office inspector prior to construction to ensure that the proper inspections are performed.

Field Verification:

Engineered wood truss drawings and/or engineered steel joist drawings must be submitted for approval to the architect or engineer of record prior to installation. Engineer's approval should be verified by one of the following:

- signed and dated Shop Drawing Review Stamp, or
- signed and dated letter stating acceptance

A CO will be issued after work is completed and all inspections are performed and satisfied. The building must have a CO before it may be occupied. Rule 0780-02-03-.09.

Sincerely,

Jeremy Hubanks, Plans Examiner II
Codes Enforcement Section

cc: Kevin Krumrey, SFMO Fire & Building Codes Inspector
Daniel Garrett, SFMO Fire & Building Codes Supervisor

Attachment: Requirements for Inspections of Construction (3 Sheets)
Approved AG-Sprinkle Shop Drawings, Hydraulic Calculations, Material Submittal (264 Sheets)

Approval: Occupancy Type: R-2, B, 3-Stories, Construction Type: V-B, Sprinklered

FIELD SET TFM# 21689-A,21689-B,21689-C PROJECT# 2025-11-03-04

THESE PLANS AND SPECIFICATIONS ARE REQUIRED TO BE KEPT ON THE JOB SITE UNTIL A FINAL CERTIFICATE OF OCCUPANCY OR PROJECT COMPLETION FORM IS ISSUED BY THIS OFFICE.
No alterations, deletions, additions or modifications of any kind are allowed to this approved set without written permission of this office.
TENNESSEE STATE FIRE MARSHAL'S OFFICE

Department of Commerce & Insurance

Inspection Information for Construction

This document provides information to assist contractors with State Fire Marshal's Office inspections. Many building projects have multiple Authorities Having Jurisdiction and consultation with those authorities is needed to meet their requirements. This is not a code checklist. It contains information pertinent to most new building projects; however, additional requirements may apply depending on the specific circumstances of each individual project.

SITE CONSTRUCTION DOCUMENTS

1. State Fire Marshal's Office (SFMO) approved architectural plans must be at the site before construction begins and must remain there until a Certificate of Occupancy is issued;
2. Grading and site preparation may begin prior to plan approval;
3. If a fire sprinkler system is installed, approved sprinkler plans must be on site prior to installation of underground or aboveground piping;
4. If a commercial kitchen hood and duct system is installed, the design intent must be on the approved plans. Shop drawings do not require approval;
5. A copy of the Tennessee contractor's license must be available for all bids over $25,000;
6. A copy of the Tennessee electrician's license must be available;
7. A copy of the Tennessee fire alarm contractor's license must be available where fire alarm work is performed or a written exemption certificate from the contractor's board. All fire alarm work including wiring, installation of components, etc. must be done by a fire alarm contractor or exempted electrical contractor;
8. A copy of the Tennessee licensed portable or fixed fire suppression contractor's license must be available for applicable work;
9. A copy of the Tennessee licensed fire sprinkler contractor's license must be available for all work beginning at the Point of Service (where water is used solely for fire protection). This includes underground water lines used solely for fire protection.

FIRE SAFETY DURING CONSTRUCTION AND DEMOLITION

1. Fire department access roads and lanes must be provided. Fire hydrants must be provided before combustible materials are on site;
2. Buildings four (4) or more stories in height shall be provided with at least one (1) standpipe. Standpipes shall be operational when the building is 40 feet above the lowest level of fire department access. Fire department hose connections must be at accessible locations adjacent to usable stairs. Standpipes shall be extended as construction progresses to within one (1) floor of the highest point of construction having secured decking or flooring;
3. Stairways are required where the building is constructed to 50 feet or four (4) stories;
4. Required means of egress for existing buildings must be maintained during construction.

FIELD SET TFM# 21689-A,21689-B,21689-C PROJECT# 2025-11-03-04

Fire Prevention/State Fire Marshal's Office • 500 James Robertson Pkwy • 10th Floor, Davy Crockett Tower
Nashville, TN 37243-1162 • Tel: 615-741-7190 • Fax: 615-253-3267 • tn.gov/fire

THESE PLANS AND SPECIFICATIONS ARE REQUIRED TO BE KEPT ON THE JOB SITE UNTIL A FINAL CERTIFICATE OF OCCUPANCY OR PROJECT COMPLETION FORM IS ISSUED BY THIS OFFICE.
No alterations, deletions, additions or modifications of any kind are allowed to this approved set without written permission of this office.
TENNESSEE STATE FIRE MARSHAL'S OFFICE

Department of Commerce & Insurance

Inspection Information for Construction

REVISIONS TO APPROVED PLANS

The building must be built according to the State Fire Marshal approved plans. Change orders, revisions, etc. that impact building, fire or life safety of the project cannot be made until the revisions are approved in writing and the plans are at the site.

INSPECTIONS

Contact your local SFMO inspector at least five (5) days prior to an inspection. Failure to schedule an inspection may result in costly repairs from exposing covered construction, or a Certificate of Occupancy not being issued. Inspections are required for:

1. **Foundation:** Inspections are required after poles or piers are set or trenches or basement areas are excavated and any required forms erected and any required reinforcing steel is in place and supported prior to the placing of concrete. The foundation inspection shall include excavations for thickened slabs intended for the support of bearing walls, partitions, structural supports, equipment and special requirements for wood foundations. Proper dimensions, installation and size of re-bar must be determined to be compliant by SFMO inspector or a 3rd party inspection service before pouring;
2. **Fire Sprinkler Underground:** Inspections are required after bedding, piping and thrust blocks prior to backfill. Hydro-static tests must be performed and documented. The SFMO inspector must witness the test unless other arrangements are made with the inspector;
3. **Framing:** Inspections are required after roof, framing, fire stopping, draft stopping, bracing, rough-in plumbing, rough-in mechanical and rough-in electrical are in place, and prior to covering walls or ceilings;
4. **Fire Rated Wall/Roof/Ceiling Assemblies:** Inspections are required after drywall, spray applied foam or other system are applied;
5. **Above-Ceiling:** Inspections are required before ceiling installation and after fire sprinkler, final mechanical, final plumbing, fire stopping systems, fire dampers, electrical fire rated wall/floor/ceiling assemblies are in place;
6. **Final:** Inspections are required after all work is complete. The contractor must provide a worker for operation of fire or smoke damper testing, duct mounted smoke detectors, fire alarm devices, test and balance of commercial kitchen hood and duct units, operation of smoke evacuation/management systems. All systems must be operational and the subcontractors must test all systems prior to the final inspection;
7. **Functional tests and documents needed to pass the final inspection** are:
    a. When required, foundation inspection reports performed by 3rd party inspection services;
    b. Final electrical inspection approval;
    c. Functional testing of generator used for life safety systems;
    d. Functional test of exit signs and emergency lighting to include all means of egress areas and exit discharge to public way. Functional testing to be observed by SFMO inspector;
    e. Boiler inspections and tagging;
    f. Functional test of commercial kitchen hood and duct and suppression systems to include: light test,

FIELD SET TFM# 21689-A,21689-B,21689-C PROJECT# 2025-11-03-04

Fire Prevention/State Fire Marshal's Office • 500 James Robertson Pkwy • 10th Floor, Davy Crockett Tower
Nashville, TN 37243-1162 • Tel: 615-741-7190 • Fax: 615-253-3267 • tn.gov/fire

THESE PLANS AND SPECIFICATIONS ARE REQUIRED TO BE KEPT ON THE JOB SITE UNTIL A FINAL CERTIFICATE OF OCCUPANCY OR PROJECT COMPLETION FORM IS ISSUED BY THIS OFFICE.
No alterations, deletions, additions or modifications of any kind are allowed to this approved set without written permission of this office.
TENNESSEE STATE FIRE MARSHAL'S OFFICE

"puff" test, energy shut-down test, capture and containment test and air balance report. Functional testing to be observed by SFMO inspector;

g. Functional test of fire alarm and Fire Alarm and Emergency Communication System Inspection and Testing Form per 2010 NFPA 72. Functional testing to be observed by SFMO inspector;
h. Functional test of fire sprinkler system and test reports and documentation for underground and aboveground systems. Functional testing to be observed by SFMO inspector;
i. Functional test of fire pumps and standpipes and acceptance test reports and documentation. Functional testing to be observed by SFMO inspector;
j. Functional test of smoke control systems acceptance test reports and documentation. Functional testing to be observed by SFMO inspector;
k. Test and balance reports for commercial HVAC systems;
l. Functional testing of shut-down test for HVAC units where applicable. Functional testing to be observed by SFMO inspector;
m. Functional testing of access controlled or delayed egress door hardware. Functional testing to be observed by SFMO inspector;
n. Elevator approval and acceptance test reports from the state elevator inspector;
o. For premanufactured metal buildings or metal framed buildings, inspection reports of structural welds and fastening devices by 3rd party inspection services;
p. Emergency responder radio coverage: New buildings shall have approved radio coverage for emergency responders within the building based upon the existing coverage levels of the public safety communication systems of the jurisdiction at the exterior of the building. This shall not require improvement of the existing public safety communication systems. The test should be performed by the local fire department after interior and exterior walls and the roof are constructed;
q. Inspection test reports and documentation for applications of fire retardant coatings;
r. For gated communities, functional test of security gate or barrier showing they are capable of receiving signals from emergency responders and allowing access.

Disclaimer: This document was developed by the Code Enforcement Section of the Tennessee Department of Commerce and Insurance. To the best of our knowledge, information contained in this document is accurate and reliable as of the date of release; however, we do not assume any liability for the accuracy or completeness.

Department of Commerce and Insurance
Authorization No. 335485 • 0 copies • September, 2018
This public document was promulgated at a cost of $35.00

FIELD SET TFM# 21689-A,21689-B,21689-C PROJECT# 2025-11-03-04

THESE PLANS AND SPECIFICATIONS ARE REQUIRED TO BE KEPT ON THE JOB SITE UNTIL A FINAL CERTIFICATE OF OCCUPANCY OR PROJECT COMPLETION FORM IS ISSUED BY THIS OFFICE.
No alterations, deletions, additions or modifications of any kind are allowed to this approved set without written permission of this office.
TENNESSEE STATE FIRE MARSHAL'S OFFICE

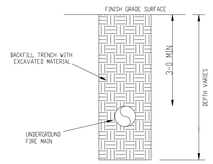

PIPE BURY DETAIL

CITY OF BROWNSVILLE SPEC FIRE HYDRANTS.

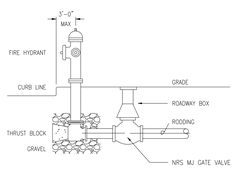

FIRE HYDRANT DETAIL

N.T.S.

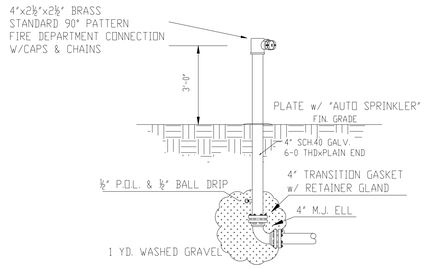

FIRE DEPT. CONNECTION DETAIL

N.T.S.

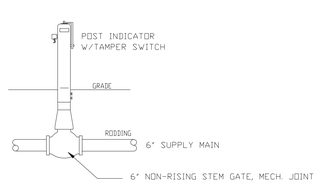

VALVE & POST INDICATOR DETAIL

N.T.S.

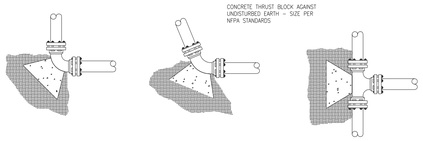

THRUST BLOCK DETAIL

N.T.S.

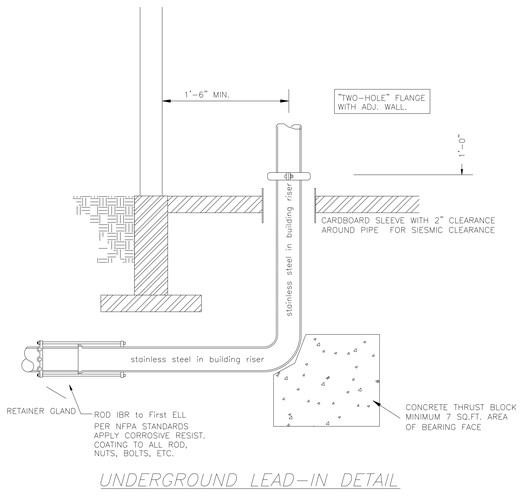

UNDERGROUND LEAD-IN DETAIL

FLOW TEST

TEST CONDUCTED BY: Brownsville Energy Athority
BY: Jackson Pettigrew
TEST DATE: 3-17-2025
STATIC PRESSURE: 68 PSI
RESIDUAL PRESSURE: 52 PSI
FLOW: 1000 GPM

ALL PIPE MEASUREMENTS ARE FROM CENTER TO CENTER

FIRE STOPPING REQUIREMENT

Fire stopping methods and materials employed on the job site may not deviate from the approved systems detailed within this approved set.

2.

GENERAL NOTES:

1. FIRE PROTECTION SYSTEMS TO BE DESIGNED IN ACCORDANCE WITH THE FOLLOWING STANDARD: N.F.P.A. #13 (2019 EDITION) NFPA #13R(2019 EDITION)
2. INSTALLATION AS PER NFPA #13 (2019 EDITION), NFPA #13R(2019 EDITION), AND THE STATE AND LOCAL CODES.
3. ALL STEEL PIPING 2" AND LARGER MAIN PIPING SHALL BE BLACK STEEL SCHEDULE 10 PIPE USING WELDED OUTLETS AND GROOVED FITTINGS, CONFORMING TO NFPA #13. ALL BRANCHLINE PIPING 1½" AND SMALLER SHALL BE BLACK STEEL SCHEDULE 10 PIPE. ALL 1" STEEL PIPE FOR DROPS, ARMOVERS,ETC. SHALL BE BLACK STEEL SCHEDULE 40 PIPE. ALL PIPING IN THE APARTMENTS ON ALL FLOORS TO BE CPVC PIPE.
4. ALL WELDING SHALL BE PERFORMED BY A CERTIFIED WELDER MEETING THE REQUIREMENTS OF AWS D10.9 LEVEL 3.
5. ALL WELDED OUTLETS SHALL BE INSPECTED TO VERIFY THAT PIPE IS FREE OF WELDING SLAG. ALL CUTOUTS HAVE BEEN REMOVED AND WELDED FITTINGS DO NOT PROTRUDE INTO THE WATERFLOW PATH. ALL WELDS SHALL BE AIR TESTED PRIOR TO SHIPMENT TO THE PROJECT.
6. ALL EQUIPMENT TO BE U/L LISTED OR FM APPROVED.
7. ALL ELECTRICAL WIRING IS BY OTHERS.
8. PAINTING OF PIPING IF REQUIRED IS BY OTHERS.
9. JOB CHECK FOR HIGH TEMPERATURE HEAD LOCATIONS.
10. FREEZE PROTECTION OF THE WET PIPE SYSTEMS IS THE OWNERS RESPONSIBILITY.
11. ALL ALARM WORK IS BY OTHERS.
12. PIPE HANGERS SHALL BE IN ACCORDANCE WITH NFPA #13. HANGER SPACING AND ROD DIAMETER SHALL BE IN ACCORDANCE WITH NFPA #13 AS FOLLOWS:
    1" THROUGH 4" PIPE = ⅜" ROD
    6" THROUGH 8" PIPE = ½" ROD
13. DESIGN CRITERIA:
    LIGHT HAZARD 13R
    0.05 GPM/SQ.FT. FOR 4 HEADS IN A COMPARTMENT, OPERATING (MAXIMUM 324 SQ.FT./STANDARD HEAD SPACING) PLUS 100 GPM FOR COMBINED INSIDE AND OUTSIDE HOSE ALLOWANCE.
    LIGHT HAZARD
    0.10 GPM/SQ.FT. FOR 1784 SQ.FT. OPERATING (MAXIMUM 130 SQ.FT./STANDARD HEAD SPACING) PLUS 250 GPM FOR COMBINED INSIDE AND OUTSIDE HOSE ALLOWANCE. (AREA INCREASED 30% DUE TO DRY SYSTEM PER N.F.P.A. #13 2019 EDITION)
14. FLOW TEST:
    STATIC: 68 PSI
    RESIDUAL: 52 PSI
    FLOW: 1000 GPM
15. ⬡ – DENOTES HYDRAULIC CALCULATION NODE POINT.
16. SPRINKLER DEFLECTOR DISTANCE SHALL BE 1" TO 12" BELOW NON COMBUSTIBLE SMOOTH CEILINGS AND 22" MAXIMUM BELOW PANEL CONSTRUCTION.
17. UNDERGROUND MAIN TO BE FLUSHED PER NFPA #24 BEFORE STACKING VALVES.
18. UNDERGROUND AND OVERHEAD PIPE SHALL BE HYDROSTATICALLY TESTED FOR 2 HOURS AT 200 PSI OR 50 PSI OVER NORMAL WORKING PRESSURE; WHICHEVER IS GREATER CITY REPRESENTATIVE SHALL WITNESS THE TEST.

2.

6.4.6.3.5.4 WHERE THE AREA OF THE FAN BLADES ENCOMPASSES MORE THAN 50% OF THE AREA OF THE PLAN VIEW, THE SPRINKLER SHALL BE INSTALLED IN ACCORDANCE WITH 6.4.6.3.6

PER NFPA 13R 2019

FAN BLADES ON THIS PROJECT ARE MORE THAN 50% OPEN

TENNESSEE ONE
CALL BEFORE YOU DIG!
1-800-351-1111

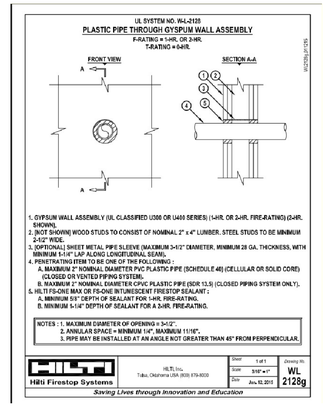

2.

UNDERGROUND NOTES

LEGEND

U.N.O.	– UNLESS NOTED OTHERWISE		– FIRE HYDRANT
CL	– CENTERLINE		– MJ GATE VA. W/ROADWAY BOX
IFW	– INSIDE FACE WALL		– POST INDICATOR GATE VALVE
OFW	– OUTSIDE FACE WALL		– NEW UNDERGROUND PIPE
SUP	– HYDRAULIC REFERENCE NODE		– SPRINKLER RISER
1/1	– REVISION		
	– THRUST BLOCK		

SCOPE OF WORK

- INSTALL NEW UNDERGROUND LEAD-IN TO PROVIDE SPRINKLER SUPPLY FOR COMPLEX. T.S.S.C. TO BEGIN WORK AT EXISTING TAPP
- WIRING OF ALL ELECTICAL DEVICES BY OTHERS

SYSTEM DESIGN

- INSTALLATION AND TESTING PER NFPA 24 2019 ED.
- PIPE TO HAVE A MINIMUM 3'-0" BURY
- ALL PIPING TO BE PROPERLY BLOCKED, RODDED, OR CLAMPED.
- ALL RODDING PER NFPA-24
- CHLORINATE ALL NEW UNDERGROUND PER NFPA REQUIREMENTS
- FLUSH ALL UNDERGROUND PER NFPA-24
- HYDRANTS TO BE LOCATED WITHIN 3'-0" OF CURB & 18" ABOVE GRADE.

PIPING MATERIALS

- UNDERGROUND PIPING TO BE CLASS 150 PVC PIPE, U.N.O.
- UNDERGROUND PIPE PASSING UNDER FOUNDATION TO BE CLASS 350 D.I. PIPE
- ALL FITTINGS TO BE CLASS 250 SLIP ON MECH. JOINT TYPE

FLOW TEST

TEST CONDUCTED BY: Brownsville Energy Athority
BY: Jackson Pettigrew
TEST DATE: 3-17-2025
STATIC PRESSURE: 68 PSI
RESIDUAL PRESSURE: 52 PSI
FLOW: 1000 GPM

PROJECT #2025-11-03-04

TFM# 21689-A
TFM# 21689-B
TFM# 21689-C

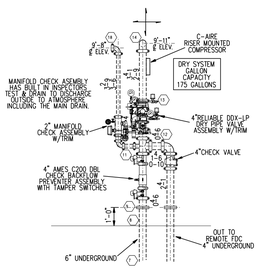

BUILDING "A" RISER DETAIL

SCALE: 3/8" = 1'-0"

2.

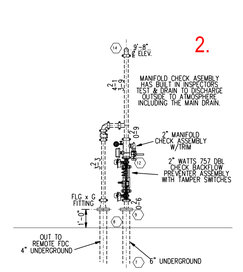

BUILDINGS "B & C" RISER DETAIL

SCALE: 3/8" = 1'-0"

FIRE PROTECTION SHOP DRAWING ENGINEERING REVIEW

☒ Approved
☐ Approved as Noted
☐ Revise and Resubmit
☐ Not Approved

Review is for general conformance with the design intent, applicable codes, and NFPA standards. This is not a comprehensive check of dimensions, quantities, methods of fabrication, or coordination with other trades. Contractor is fully responsibility for: accuracy of dimensions, quantities, coordination with other trades, installation methods, field verification, or compliance with all contract documents and governing codes.

Reviewer: Derrick Shaver
Company: Shaver Fire Engineering & Design
PE License No.: 115344
Date: 2/26/26 Project No.: 2025-11-03-04

N

RESIDENTIAL SPRINKLERS TO BE SPACED NO MORE THAN 18x18

SPRINKLER SYMBOL DESCRIPTION

Symbol	Make	Model	S.I.N.	K-Factor	Temp.	Style	Response	Finish	Coverage	NPT Size	Total
◉	RELIABLE	F1RES49	R3516	4.9	200	RECESSED PENDENT	QR	WHITE	STD	1/2"	
◐	RELIABLE	F3QR56	R5714	5.6	200	RECESSED DRY PEND	QR	WHITE	STD	1"	
◉	VICTAULIC	FL-DRY/ V51	V3506	5.6	200	DRY FLEX PENDENT	FR	WHITE	STD	1/2"	
○	RELIABLE	KFR-CCS	RA4454	5.6	212	COMB CONC UPRIGHT	FR	BRASS	STD	1/2"	
Total Sprinklers Shown on This Sheet											
Total Sprinklers Required on This Contract											512

PLANS AND SPECIFICATIONS ARE REQUIRED TO BE KEPT ON THE JOB SITE AT ALL TIMES. A FINAL CERTIFICATE OF OCCUPANCY OR COMPLETION FORM IS ISSUED BY THIS OFFICE.
No alterations, deletions or modifications of any kind are to be made to this approved set without written permission of this office.
TENNESSEE STATE FIRE MARSHAL'S OFFICE

TRI-STATE SPRINKLER CORPORATION
3085 Fountainside dr
STE 110
GERMANTOWN,TN 38138
P (901)365-9616
F (901)365-7319

RMD-Responsible Managing Employee
BOBBY R. BLACKBURN
RME ID# 002
TENNESSEE
Bobby R. Blackburn

No	Date	REVISIONS Description
1	12/17/2025	REVISED UNDERGROUND PIPING AND BUILDING C EXPANSION PIPING
2	1-16-26	Added Notes per State Fire Marshall Review

This drawing is the property of Tri-State Sprinkler Corporation and is not to be reproduced or copied in whole or in part. It is to be used only for the Project and Site specifically identified herein. It is to be returned upon demand. Electronic drawn hemeon are valid on the original drawing, the size of which is 30" x 42".

DRAWING TITLE
FIRE PROTECTION SITE PLAN

DRAWN BY
Eddie White

SCALE
1" = 30'-0"

DATE
12-11-2025

JOB NUMBER
12096

The Reserves at Cobalt Circle
1616 Jefferson St.
Brownsville, Tn

SHEET
FP 1
1 of 7

FIELD SET TFM# 21689-A, 21689-B, 21689-C PROJECT# 2025-11-03-04

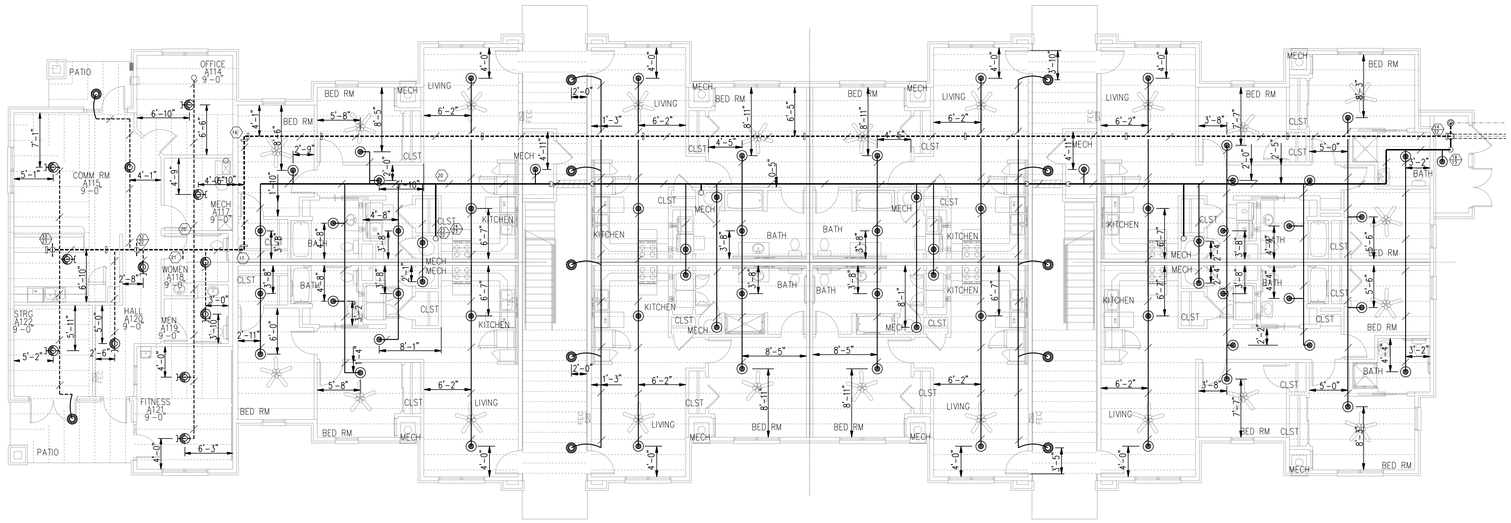

BUILDING A
DIMENSION PLAN- LEVEL 1

SCALE: 1/8" = 1'-0"

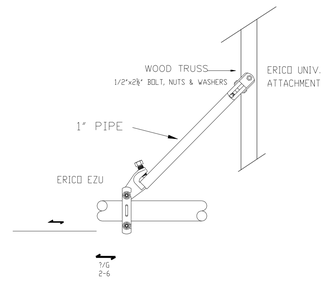

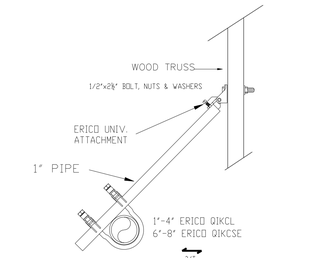

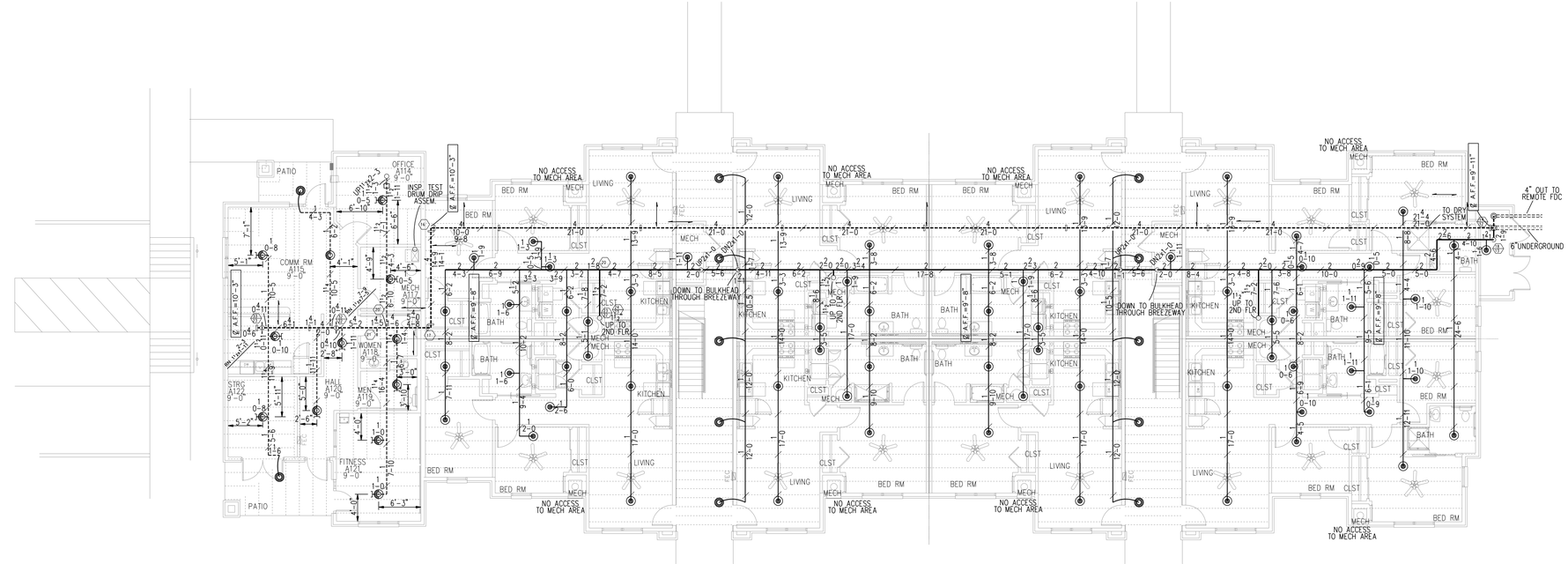

BUILDING A
FIRE PROTECTION PLAN- LEVEL 1

SCALE: 1/8" = 1'-0"

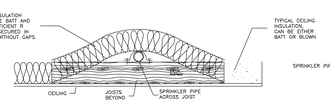

PIPING PERPENDICULAR WITH CEILING JOIST



PIPING PARALLEL WITH CEILING JOIST

POR TO VERIFY THAT A MINIMUM OF 40 DEGREES WILL BE MAINTAINED IN ALL AREAS WHERE WET PIPE SYSTEMS OCCUR.

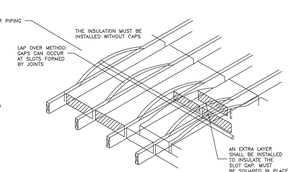

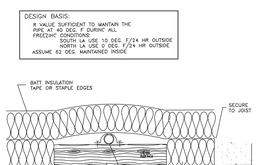

ALL DRY PIPING MUST SLOPE TO DRAIN PER NFPA 13.

MAINS TO SLOPE ¼" PER 10'
BRANCH LINES TO SLOPE ½" PER 10'

PIPE LEGEND
STEEL PIPE BLK. SCH. 10&40
CPVC PIPE

MAXIMUM DISTANCE BETWEEN HANGERS							
	1"	1¼"	1½"	2"	2½"	3"	
CPVC PIPE	6'-0"	6'-6"	7'-0"	8'-0"	9'-0"	10'-0"	
STEEL PIPE	12'-0"	12'-0"	15'-0"	15'-0"	15'-0"	15'-0"	

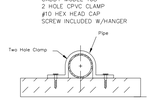

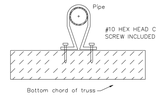

TYPICAL BRANCHLINE HANGER DETAIL

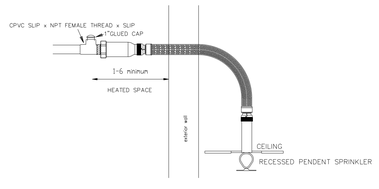

VICTAULIC DRY FLEX WHITE CONCEALED SPRINKLERS
LENGTH TO BE 58" WITH VB1 BRACKET

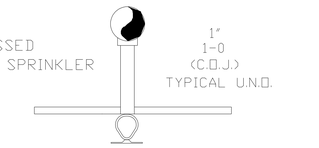

DROP DETAIL FOR SHEETROCK CEILINGS

FIRE PROTECTION SHOP DRAWING ENGINEERING REVIEW
☒ Approved
☐ Approved as Noted
☐ Revise and Resubmit
☐ Not Approved
Review is for general conformance with the design intent, applicable codes, and NFPA standards. This is not a comprehensive check of dimensions, quantities, methods of fabrication, or coordination with other trades. Contractor is fully responsibility for: accuracy of dimensions, quantities, coordination with other trades, installation methods, field verification, or compliance with all contract documents and governing codes.
Reviewer: Derrick Shaver
Company: Shaver Fire Engineering & Design
PE License No.: 115344
Date: 2/26/26 Project No.: 2025-11-03-04

PROJECT # 2025-11-03-04
TFM # 21689-A

RESIDENTIAL SPRINKLERS TO BE SPACED NO MORE THAN 18x18

SPRINKLER SYMBOL DESCRIPTION

Symbol	Make	Model	S.I.N.	K-Factor	Temp.	Style	Response	Finish	Coverage	NPT Size	Total
◉	RELIABLE	F1RES49	R3516	4.9	200	RECESSED PENDENT	QR	WHITE	STD	1/2"	66
◐	RELIABLE	F3QR56	R5714	5.6	200	RECESSED DRY PEND	QR	WHITE	STD	1/2"	12
◉	VICTAULIC	FL-DRY/VS1	V3506	5.6	200	DRY FLEX PENDENT	FR	WHITE	STD	1/2"	12
○	RELIABLE	AH-56	RA5626	5.6	212	ATTIC UPRIGHT	FR	BRASS	STD	1/2"	
Total Sprinklers Shown on This Sheet											90
Total Sprinklers Required on This Contract											512

PLANS AND SPECIFICATIONS MODIFICATIONS OF ANY KIND WILL BE ALLOWED TO BE MADE WITHOUT WRITTEN CONSENT OF TRI-STATE SPRINKLER CORPORATION. A FINAL CERTIFICATE OF COMPLETION WILL NOT BE ISSUED BY THIS OFFICE.
No allowances, deferments or variations of the requirements of the approved set will be allowed unless approved by the TENNESSEE STATE FIRE MARSHALL'S OFFICE.

TRI-STATE SPRINKLER CORPORATION
3085 Fountainside Dr.
Suite 110
Germantown, Tn 38138
P (901)365-9616
F (901)365-7319

BOBBY R BLACKBURN RME ID# 002 TENNESSEE
RME-Responsible Managing Employee
Bobby R. Blackburn

REVISIONS

No	Date	Description
1	12/17/2025	REVISED UNDERGROUND PIPING AND BUILDING C EXPANSION PIPING
2	1/16/2026	ADDED NOTES PER STATE FIRE MARSHALL REVIEW

This drawing is the property of Tri-State Sprinkler Corporation and is not to be reproduced or copied in whole or in part. It is to be used only for the Project and Site specifically identified herein. It is to be returned upon demand. Dimensions shown hereon are valid on the original drawing, the size of which is 30" x 42".

DRAWING TITLE
FIRE SPRINKLER PLAN
BUILDING A
LEVEL 1

DRAWN BY
SFPC-DW

SCALE
1/8" = 1'-0"

DATE
11-10-2025

JOB NUMBER
12056

THE RESERVES AT COBALT CIRCLE
1616 E. JEFFERSON STREET
BROWNSVILLE, TENNESSEE 38012

SHEET
FP2
2 of 7

FIELD SET TFM# 21689-A, 21689-B, 21689-C PROJECT# 2025-11-03-04

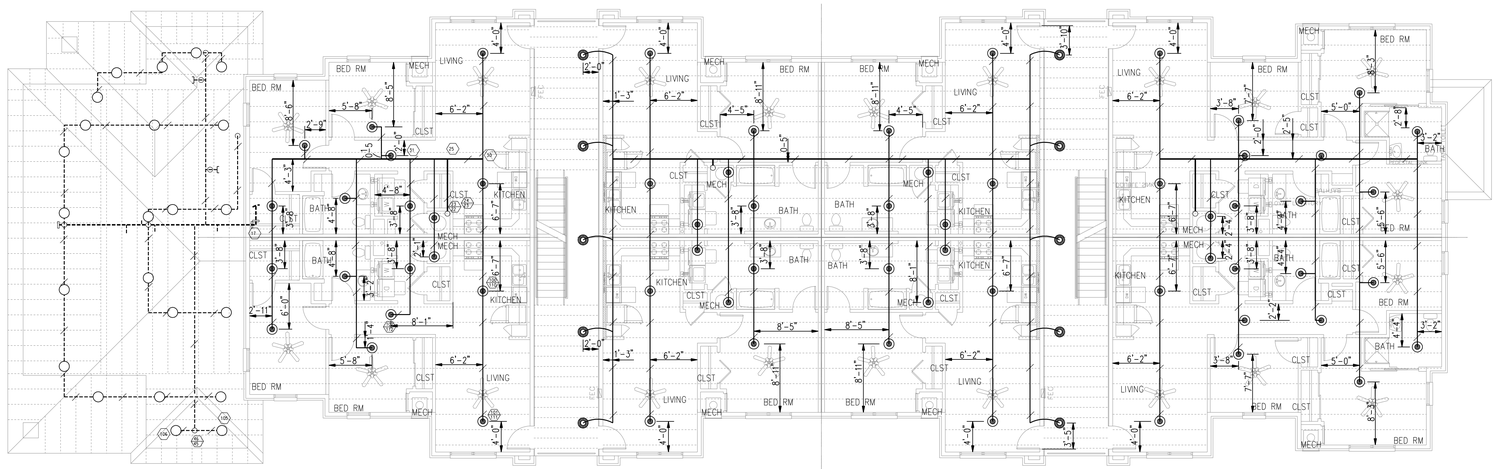

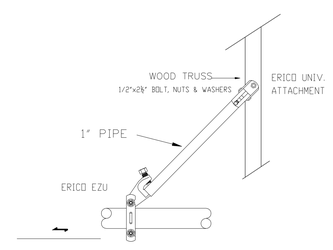

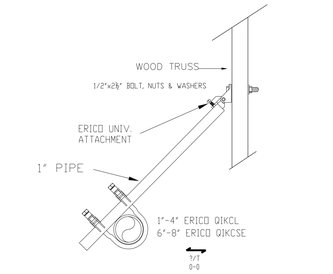

HYDRAULIC SYSTEM	
THIS BUILDING IS PROTECTED BY A HYDRAULICALLY DESIGNED AUTOMATIC SPRINKLER SYSTEM	
LOCATION	BUILDING A, DRY SYSTEM
NO. OF SPRINKLERS	23
BASIS OF DESIGN	DRY SYSTEM
DENSITY	.10 GPM/SQ.FT.
DESIGNED AREA OF DISCHARGE	1784 SQ.FT.
SYSTEM DEMAND	
1. GPM DISCHARGE	434.4 GPM
2. RESIDUAL PRESSURE AT THE BASE OF RISER NODE 9	53.57 PSI
SYSTEM DEMAND AT STREET	
GPM REQUIRED:	534.4
PSI REQUIRED:	55.70
PSI AVAILABLE:	62.98
OVERAGE:	7.28 PSI = 11.6 %

AREA INCREASED 30% PER NFPA 13 19.3.3.2.5

HYDRAULIC SYSTEM	
THIS BUILDING IS PROTECTED BY A HYDRAULICALLY DESIGNED AUTOMATIC SPRINKLER SYSTEM	
LOCATION	BUILDING A, 3RD FLR
NO. OF SPRINKLERS	3
BASIS OF DESIGN	
DENSITY	.05 GPM/SQ.FT.
DESIGNED AREA OF DISCHARGE	3HDS SQ.FT.
SYSTEM DEMAND	
1. GPM DISCHARGE	53.7 GPM
2. RESIDUAL PRESSURE AT THE BASE OF RISER NODE 9	48.56 PSI
SYSTEM DEMAND AT STREET	
GPM REQUIRED:	153.7
PSI REQUIRED:	49.02
PSI AVAILABLE:	67.50
OVERAGE:	18.48 PSI = 27.4 %

BUILDING A
DIMENSION PLAN- LEVELS 2 & 3

SCALE: 1/8" = 1'-0"

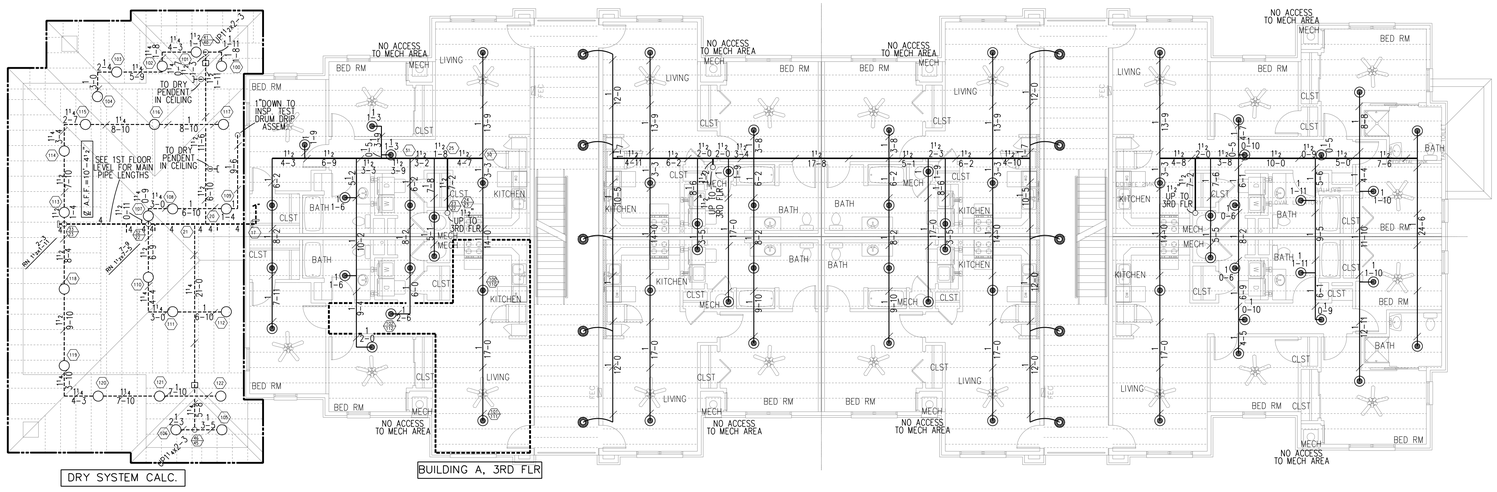

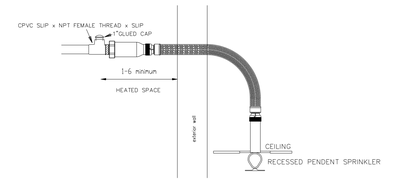

VICTAULIC DRY FLEX WHITE CONCEALED SPRINKLERS
LENGTH TO BE 58" WITH VB1 BRACKET

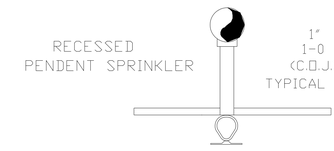

DROP DETAIL FOR SHEETROCK CEILINGS

FIRE PROTECTION SHOP DRAWING ENGINEERING REVIEW
☒ Approved
☐ Approved as Noted
☐ Revise and Resubmit
☐ Not Approved
Review is for general conformance with the design intent, applicable codes, and NFPA standards. This is not a comprehensive check of dimensions, quantities, methods of fabrication, or coordination with other trades. Contractor is fully responsibility for: accuracy of dimensions, quantities, coordination with other trades, installation methods, field verification, or compliance with all contract documents and governing codes.
Reviewer: Derrick Shaver
Company: Shaver Fire Engineering & Design
PE License No.: 115344
Date: 2/26/26 Project No.: 2025-11-03-04

BUILDING A
FIRE PROTECTION PLAN- LEVELS 2 & 3

SCALE: 1/8" = 1'-0"

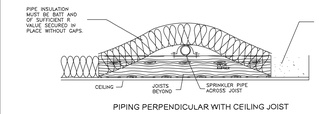

PIPING PERPENDICULAR WITH CEILING JOIST

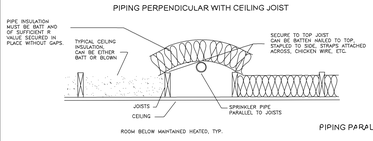

ROOM BELOW MAINTAINED HEATED, TYP.

PIPING PARALLEL WITH CEILING JOIST

POR TO VERIFY THAT A MINIMUM OF 40 DEGREES WILL BE MAINTAINED IN ALL AREAS WHERE WET PIPE SYSTEMS OCCUR.

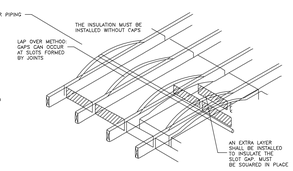

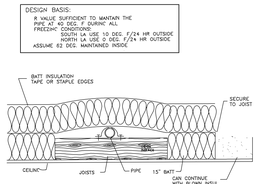

ALL DRY PIPING MUST SLOPE TO DRAIN PER NFPA 13.

MAINS TO SLOPE ¼" PER 10'
BRANCH LINES TO SLOPE ½" PER 10'

PIPE LEGEND
STEEL PIPE BLK. SCH. 10&40
CPVC PIPE

MAXIMUM DISTANCE BETWEEN HANGERS							
	1"	1¼"	1½"	2"	2½"	3"	
CPVC PIPE	6'-0"	6'-6"	7'-0"	8'-0"	9'-0"	10'-0"	
STEEL PIPE	12'-0"	12'-0"	15'-0"	15'-0"	15'-0"	15'-0"	

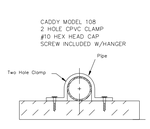

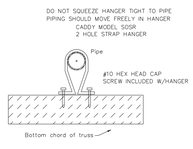

TYPICAL BRANCHLINE HANGER DETAIL

PROJECT # 2025-11-03-04
TFM # 21689-A

RESIDENTIAL SPRINKLERS TO BE SPACED NO MORE THAN 18x18

SPRINKLER SYMBOL DESCRIPTION

Symbol	Make	Model	S.I.N.	K-Factor	Temp.	Style	Response	Finish	Coverage	NPT Size	Total
◉	RELIABLE	F1RES49	R3516	4.9	200	RECESSED PENDENT	QR	WHITE	STD	1/2"	53
◐	RELIABLE	F3QR56	R5714	5.6	200	RECESSED DRY PEND	QR	WHITE	STD	1/2"	1
◉	VICTAULIC	FL-DRY/ VS1	V3506	5.6	200	DRY FLEX PENDENT	FR	WHITE	STD	1/2"	10
○	RELIABLE	AH-56	RA5626	5.6	212	ATTIC UPRIGHT	FR	BRASS	STD	1/2"	23
Total Sprinklers Shown on This Sheet											96
Total Sprinklers Required on This Contract											512

TRI-STATE SPRINKLER CORPORATION
3085 Fountainside Dr.
Suite 110
Germantown, Tn 38138
P (901)365-9616
F (901)365-7319

NAME Responsible Managing Employee
BOBBY R BLACKBURN
RME ID# 002
TENNESSEE
Bobby R. Blackburn

REVISIONS

No	Date	Description
1	12/17/2025	REVISED UNDERGROUND PIPING AND BUILDING C EXPANSION PIPING
2	1/16/2026	ADDED NOTES PER STATE FIRE MARSHALL REVIEW

This drawing is the property of TriState Sprinkler Corporation and is not to be reproduced or copied in whole or in part. It is to be used only for the Project and Site specifically identified herein. It is to be returned upon demand. Drawings marked hereon are valid on the original drawing, the size of which is 30" x 42".

DRAWING TITLE
FIRE SPRINKLER PLAN
BUILDING A
LEVELS 2 & 3

DRAWN BY
SFPC-DW

SCALE
1/8" = 1'-0"

DATE
11-10-2025

JOB NUMBER
12056

THE RESERVES AT COBALT CIRCLE
1616 E. JEFFERSON STREET
BROWNSVILLE, TENNESSEE 38012

SHEET
FP3
3 of 7

FIELD SET TFM# 21689-A, 21689-B, 21689-C PROJECT# 2025-11-03-04

PLANS AND SPECIFICATIONS ARE LOANED TO BE KEPT ON THE JOB SITE AND ARE NOT TO BE USED FOR ANY PURPOSE OTHER THAN THE CONSTRUCTION OF THE PROJECT FOR WHICH THEY ARE ISSUED. NO ALTERATIONS, DELETIONS, MODIFICATIONS OF ANY KIND ARE TO BE MADE TO THESE PLANS WITHOUT WRITTEN APPROVAL AND AUTHORIZATION OF THIS OFFICE.

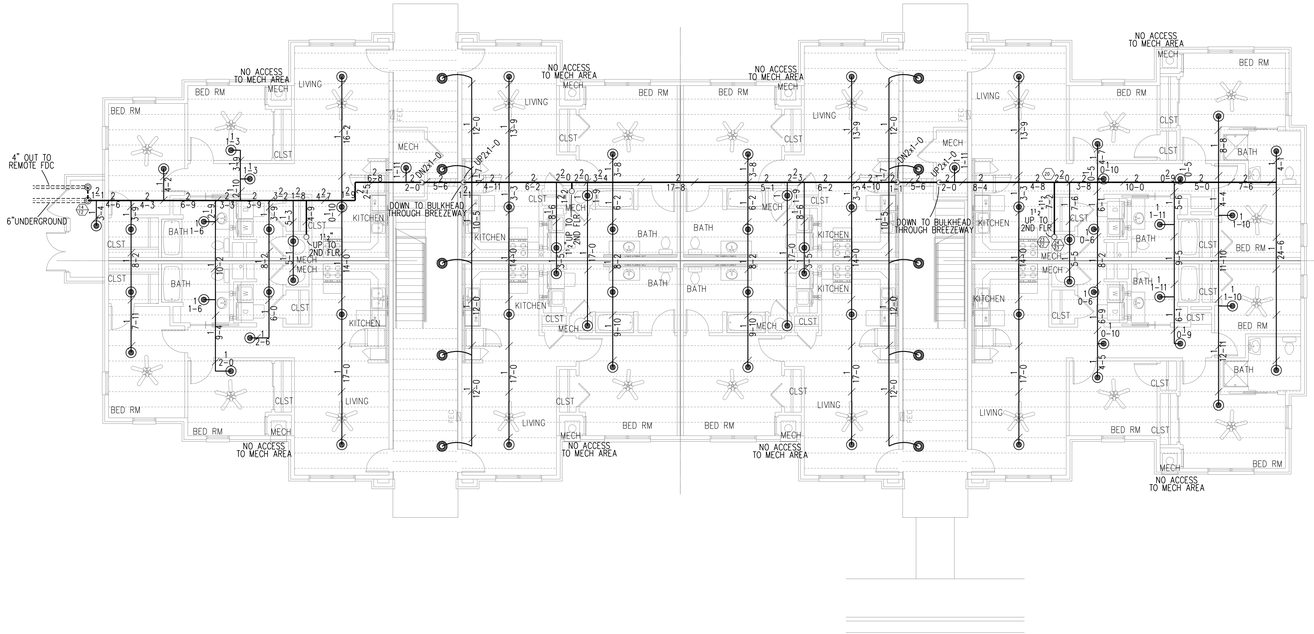

BUILDING B
FIRE PROTECTION PLAN- LEVEL 1

SCALE: 1/8" = 1'-0"

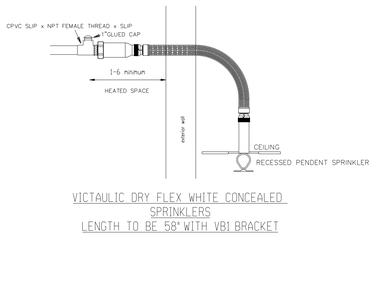

VICTAULIC DRY FLEX WHITE CONCEALED SPRINKLERS
LENGTH TO BE 58" WITH VB1 BRACKET



DROP DETAIL FOR SHEETROCK CEILINGS

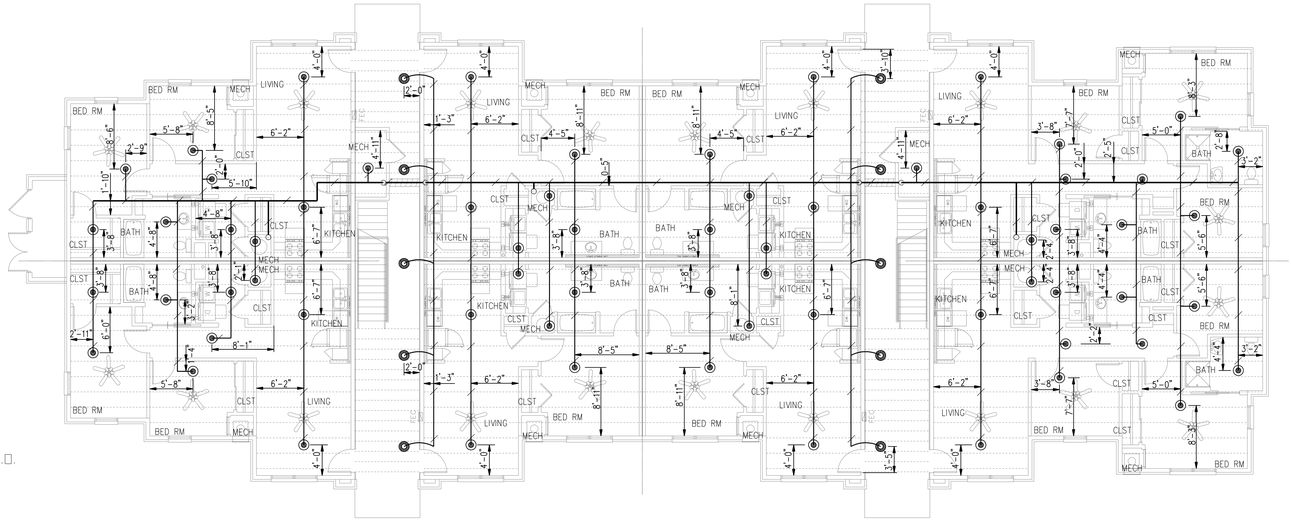

BUILDING B
DIMENSION PLAN- LEVEL 1

SCALE: 1/8" = 1'-0"

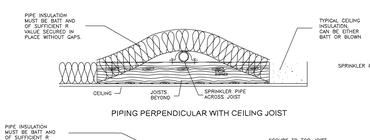

PIPING PERPENDICULAR WITH CEILING JOIST

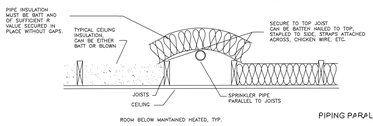

PIPING PARALLEL WITH CEILING JOIST

POR TO VERIFY THAT A MINIMUM OF 40 DEGREES WILL BE MAINTAINED IN ALL AREAS WHERE WET PIPE SYSTEMS OCCUR.

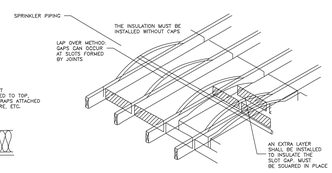

DESIGN BASIS:
R VALUE SUFFICIENT TO MAINTAIN THE PIPE AT 40 DEG F DURING ALL FREEZING CONDITIONS
SOUTH LA USE 10 DEG F/24 HR OUTSIDE
NORTH LA USE 0 DEG F/24 HR OUTSIDE
ASSUME 62 DEG MAINTAINED INSIDE

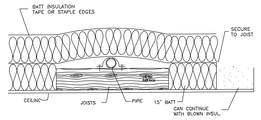

PIPE LEGEND
STEEL PIPE BLK, SCH. 10&40
CPVC PIPE

MAXIMUM DISTANCE BETWEEN HANGERS						
	1"	1¼"	1½"	2"	2½"	3"
CPVC PIPE	6'-0"	6'-6"	7'-0"	8'-0"	9'-0"	10'-0"
STEEL PIPE	12'-0"	12'-0"	15'-0"	15'-0"	15'-0"	15'-0"

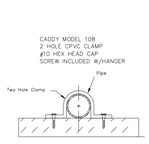

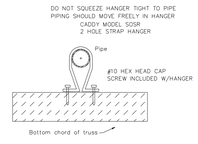

TYPICAL BRANCHLINE HANGER DETAIL

FIRE PROTECTION SHOP DRAWING ENGINEERING REVIEW
☒ Approved
☐ Approved as Noted
☐ Revise and Resubmit
☐ Not Approved
Review is for general conformance with the design intent, applicable codes, and NFPA standards. This is not a comprehensive check of dimensions, quantities, methods of fabrication, or coordination with other trades. Contractor is fully responsibility for: accuracy of dimensions, quantities, coordination with other trades, installation methods, field verification, or compliance with all contract documents and governing codes.
Reviewer: Derrick Shaver
Company: Shaver Fire Engineering & Design
PE License No.: 115344
Date: 2/26/26 Project No.: 2025-11-03-04

PROJECT # 2025-11-03-04
TFM # 21689-B

RESIDENTIAL SPRINKLERS TO BE SPACED NO MORE THAN 18x18

SPRINKLER SYMBOL DESCRIPTION

Symbol	Make	Model	S.I.N.	K-Factor	Temp.	Style	Response	Finish	Coverage	NPT Size	Total
	RELIABLE	F1RES49	R3516	4.9	200	RECESSED PENDENT	QR	WHITE	STD	1/2"	67
	RELIABLE	F3QR56	R5714	5.6	200	RECESSED DRY PEND	QR	WHITE	STD	1/2"	
	VICTAULIC	FL-DRY/ VS1	V3506	5.6	200	DRY FLEX PENDENT	FR	WHITE	STD	1/2"	10
	RELIABLE	AH-56	RA5626	5.6	212	ATTIC UPRIGHT	FR	BRASS	STD	1/2"	
Total Sprinklers Shown on This Sheet											77
Total Sprinklers Required on This Contract											512

THESE PLANS AND SPECIFICATIONS MUST BE RETAINED ON SITE. A FINAL CERTIFICATE OF COMPLETION WILL NOT BE ISSUED BY THIS OFFICE UNLESS THIS FORM IS SIGNED AND RETURNED.
No allowances, deletions or modifications of any kind will be approved unless approved and signed by the Fire Marshall's office.
TENNESSEE STATE FIRE MARSHALL'S OFFICE

TRI-STATE SPRINKLER CORPORATION
3085 Fountainside Dr.
Suite 110
Germantown, Tn 38138
P (901)365-0616
F (901)365-7319

TENNESSEE Responsible Managing Employee
BOBBY E BLACKBURN
RME ID# 002
Bobby R. Blackburn

REVISIONS

No	Date	Description
1	12/17/2025	REVISED UNDERGROUND PIPING AND BUILDING C EXPANSION PIPING
2	1/16/2026	ADDED NOTES PER STATE FIRE MARSHALL REVIEW

This drawing is the property of Tri-State Sprinkler Corporation and is not to be reproduced or copied in whole or in part. It is to be used only for the Project and Site specifically identified herein. It is to be returned upon demand. Dimensions noted hereon are valid on the original drawing, the size of which is 30" x 42".

DRAWING TITLE
FIRE SPRINKLER PLAN
BUILDING B
LEVEL 1

DRAWN BY
SFPC-DW

SCALE
1/8" = 1'-0"

DATE
11-10-2025

JOB NUMBER
12056

THE RESERVES AT COBALT CIRCLE
1616 E. JEFFERSON STREET
BROWNSVILLE, TENNESSEE 38012

SHEET
FP4
4 of 7

FIELD SET TFM# 21689-A, 21689-B, 21689-C PROJECT# 2025-11-03-04

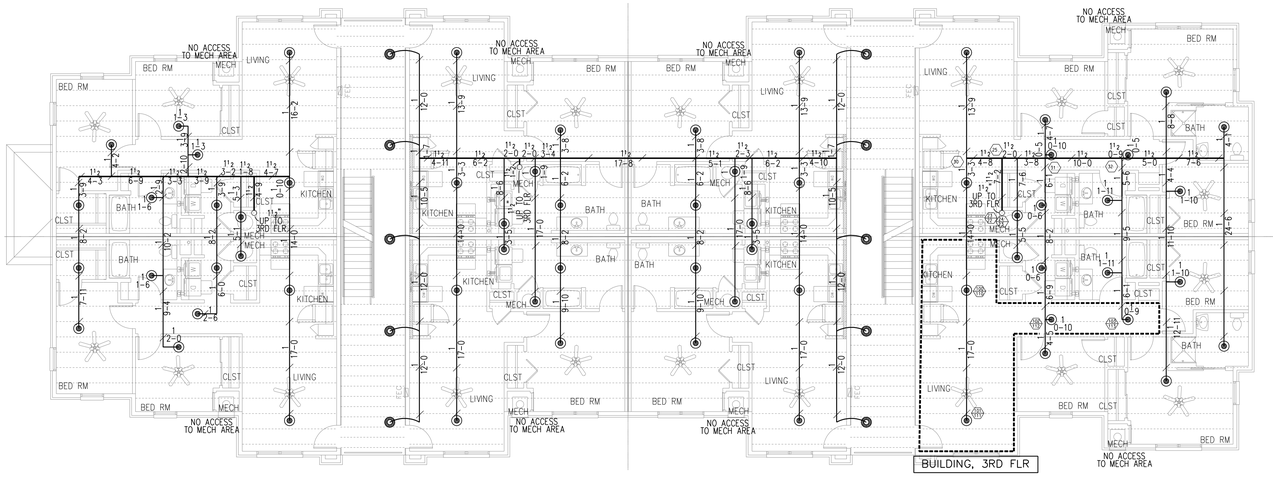

BUILDING B
FIRE PROTECTION PLAN- LEVELS 2 & 3

SCALE: 1/8" = 1'-0"

HYDRAULIC SYSTEM

THIS BUILDING IS PROTECTED BY A HYDRAULICALLY DESIGNED AUTOMATIC SPRINKLER SYSTEM

LOCATION	BUILDING B, 3RD FLR
NO. OF SPRINKLERS	4
BASIS OF DESIGN	
DENSITY	.05 GPM/SQ.FT.
DESIGNED AREA OF DISCHARGE	4HDS SQ.FT.
SYSTEM DEMAND	
1. GPM DISCHARGE	72.6 GPM
2. RESIDUAL PRESSURE AT THE BASE OF RISER NODE 9	55.45 PSI

SYSTEM DEMAND AT STREET

GPM REQUIRED:	172.6
PSI REQUIRED:	55.96
PSI AVAILABLE:	67.38
OVERAGE:	11.42 PSI = 16.9 %

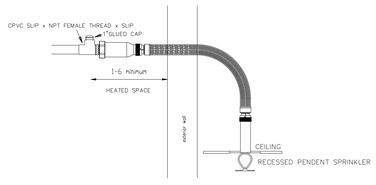

VICTAULIC DRY FLEX WHITE CONCEALED SPRINKLERS
LENGTH TO BE 58" WITH VB1 BRACKET

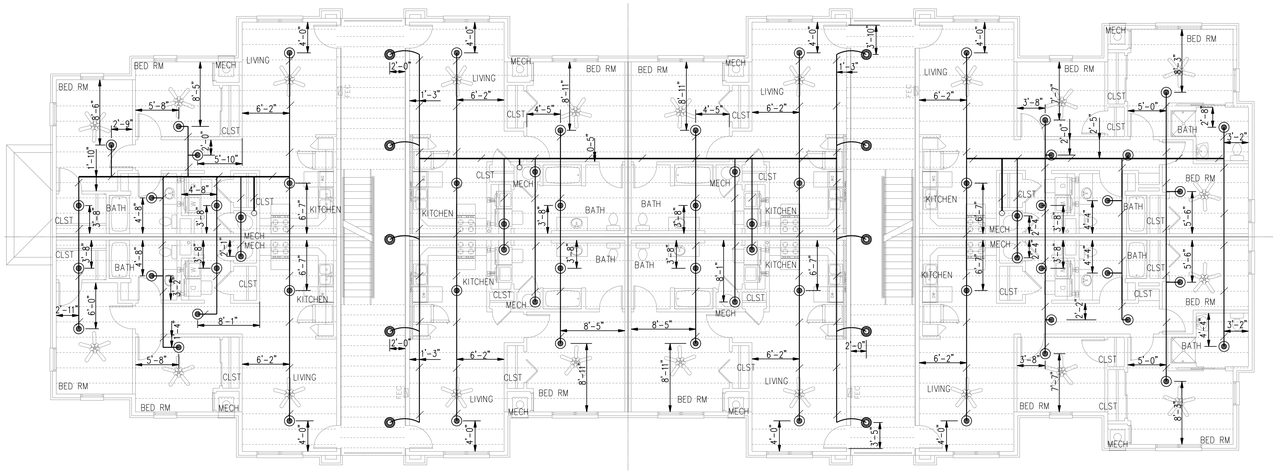



DROP DETAIL FOR SHEETROCK CEILINGS

BUILDING B
DIMENSION PLAN- LEVELS 2 & 3

SCALE: 1/8" = 1'-0"

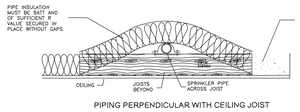

PIPING PERPENDICULAR WITH CEILING JOIST

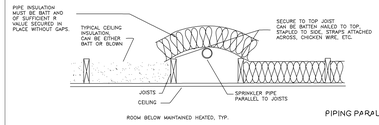

PIPING PARALLEL WITH CEILING JOIST

POR TO VERIFY THAT A MINIMUM OF 40 DEGREES WILL BE MAINTAINED IN ALL AREAS WHERE WET PIPE SYSTEMS OCCUR.

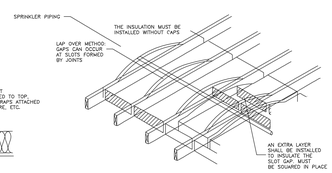

DESIGN BASIS:
R VALUE SUFFICIENT TO MAINTAIN THE FOLLOWING DESIGN CONDITIONS:
FREEZING CONDITIONS:
SOUTH LA USE 10 DEG F/24 HR OUTSIDE
NORTH LA USE 0 DEG F/24 HR OUTSIDE
ASSUME 62 DEG MAINTAINED INSIDE

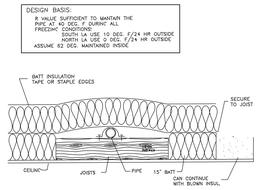

PIPE LEGEND
STEEL PIPE BLK SCH 10&40
CPVC PIPE ——————

MAXIMUM DISTANCE BETWEEN HANGERS						
	1"	1¼"	1½"	2"	2½"	3"
CPVC PIPE	6'-0"	6'-6"	7'-0"	8'-0"	9'-0"	10'-0"
STEEL PIPE	12'-0"	12'-0"	15'-0"	15'-0"	15'-0"	15'-0"

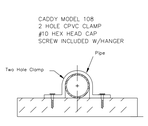

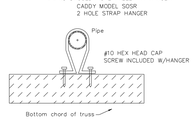

TYPICAL BRANCHLINE HANGER DETAIL

FIRE PROTECTION SHOP DRAWING ENGINEERING REVIEW

- [X] Approved
- [ ] Approved as Noted
- [ ] Revise and Resubmit
- [ ] Not Approved

Review is for general conformance with the design intent, applicable codes, and NFPA standards. This is not a comprehensive check of dimensions, quantities, methods of fabrication, or coordination with other trades. Contractor is fully responsibility for: accuracy of dimensions, quantities, coordination with other trades, installation methods, field verification, or compliance with all contract documents and governing codes.

Reviewer: Derrick Shaver
Company: Shaver Fire Engineering & Design
PE License No.: 115344
Date: 2/26/26 Project No.: 2025-11-03-04

PROJECT # 2025-11-03-04
TFM # 21689-B

RESIDENTIAL SPRINKLERS TO BE SPACED NO MORE THAN 18x18

SPRINKLER SYMBOL DESCRIPTION

Symbol	Make	Model	S.I.N.	K-Factor	Temp.	Style	Response	Finish	Coverage	NPT Size	Total
◉	RELIABLE	F1RES49	R3516	4.9	200	RECESSED PENDENT	QR	WHITE	STD	1/2"	64
◐	RELIABLE	F3QR56	R5714	5.6	200	RECESSED DRY PEND	QR	WHITE	STD	1/2"	
◉	VICTAULIC	FL-DRY/ VS1	V3506	5.6	200	DRY FLEX PENDENT	FR	WHITE	STD	1/2"	10
○	RELIABLE	AH-56	RA5626	5.6	212	ATTIC UPRIGHT	FR	BRASS	STD	1/2"	
Total Sprinklers Shown on This Sheet											74
Total Sprinklers Required on This Contract											512

THESE PLANS AND SPECIFICATIONS AND COPYRIGHTED AND ONLY TO BE USED FOR THE SITE AND PROJECT LISTED HEREON. THEY ARE NOT TO BE LOANED, COPIED OR REPRODUCED IN WHOLE OR IN PART FOR ANY REASON WITHOUT THE WRITTEN PERMISSION OF TRI-STATE SPRINKLER CORPORATION. ALL COMMON LAW, STATUTORY AND OTHER RESERVED RIGHTS, INCLUDING COPYRIGHT, TO THE PLANS AND SPECIFICATIONS ARE RESERVED.

TRI-STATE SPRINKLER CORPORATION
3085 Fountainside Dr.
Suite 110
Germantown, Tn 38138
P (901)365-9616
F (901)365-7319

RME Responsible Managing Employee
BOBBY E BLACKBURN
RME ID# 002
TENNESSEE
Bobby R. Blackburn

REVISIONS

No	Date	Description
1	12/17/2025	REVISED UNDERGROUND PIPING AND BUILDING C EXPANSION PIPING
2	1/16/2026	ADDED NOTES PER STATE FIRE MARSHALL REVIEW

This drawing is the property of TriState Sprinkler Corporation and is not to be reproduced or copied in whole or in part. It is to be used only for the Project and Site specifically identified herein. It is to be returned upon demand. Drawings marked hereon are valid on the original drawing, the size of which is 30" x 42".

DRAWING TITLE
FIRE SPRINKLER PLAN
BUILDING B
LEVELS 2 & 3

DRAWN BY
SFPC-DW

SCALE
1/8" = 1'-0"

DATE
11-10-2025

JOB NUMBER
12056

THE RESERVES AT COBALT CIRCLE
1616 E. JEFFERSON STREET
BROWNSVILLE, TENNESSEE 38012

SHEET
FP5
5 of 7

FIELD SET TFM# 21689-A, 21689-B, 21689-C PROJECT# 2025-11-03-04

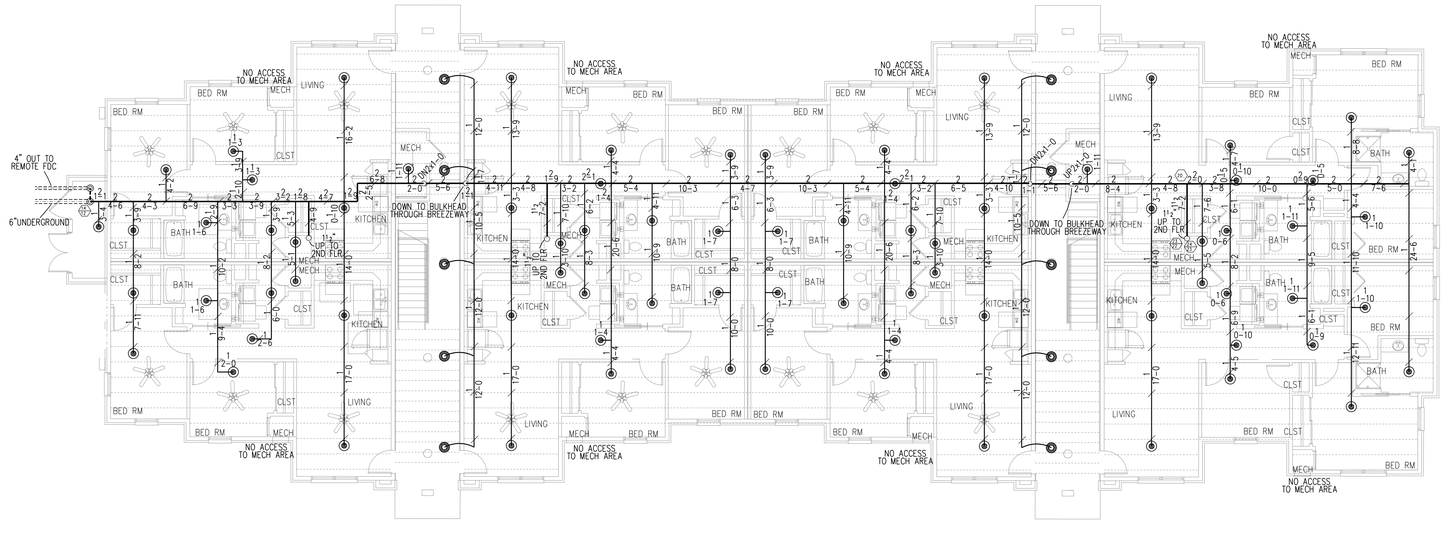

BUILDING C
FIRE PROTECTION PLAN- LEVEL 1

SCALE: 1/8" = 1'-0"

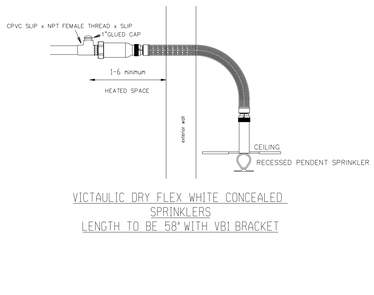

VICTAULIC DRY FLEX WHITE CONCEALED SPRINKLERS
LENGTH TO BE 58" WITH VB1 BRACKET

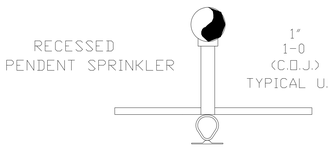

DROP DETAIL FOR SHEETROCK CEILINGS

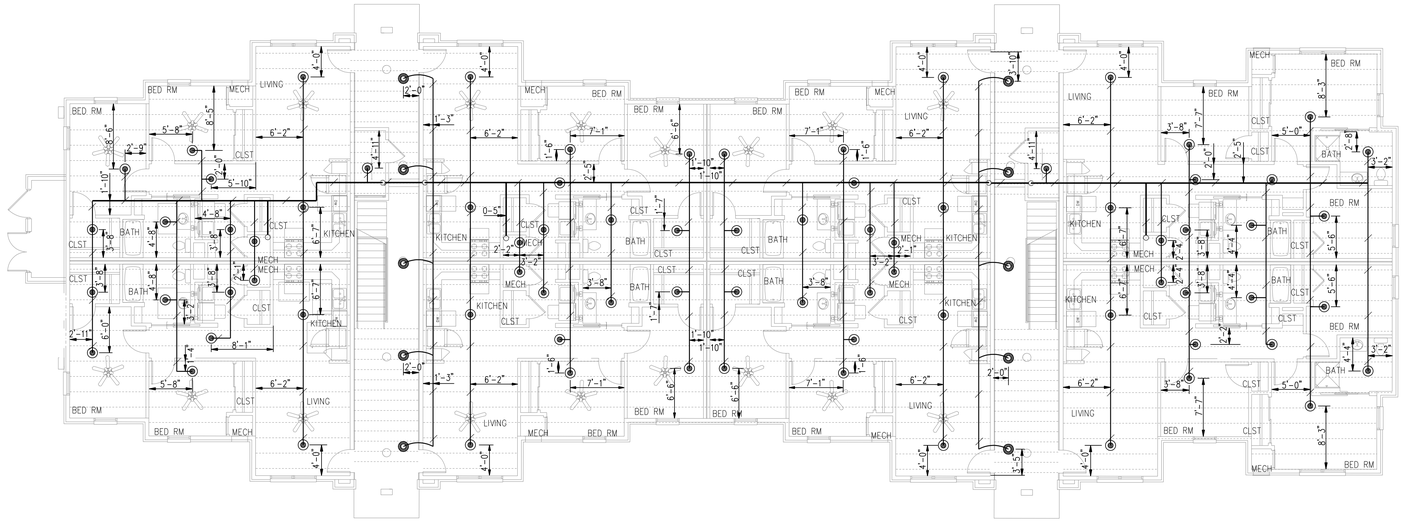

BUILDING C
DIMENSION PLAN- LEVEL 1

SCALE: 1/8" = 1'-0"

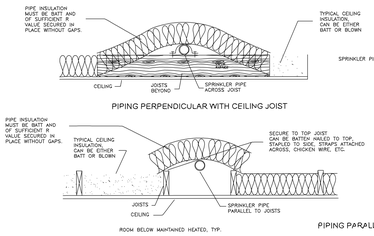

PIPING PERPENDICULAR WITH CEILING JOIST

ROOM BELOW MAINTAINED HEATED, TYP.

PIPING PARALLEL WITH CEILING JOIST

POR TO VERIFY THAT A MINIMUM OF 40 DEGREES WILL BE MAINTAINED IN ALL AREAS WHERE WET PIPE SYSTEMS OCCUR.

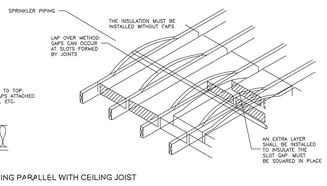

DESIGN BASIS:
R VALUE SUFFICIENT TO MAINTAIN THE PIPE AT 40 DEG. F DURING ALL FREEZING CONDITIONS:
SOUTH LA USE 10 DEG. F/24 HR OUTSIDE
NORTH LA USE 0 DEG. F/24 HR OUTSIDE
ASSUME 62 DEG. MAINTAINED INSIDE

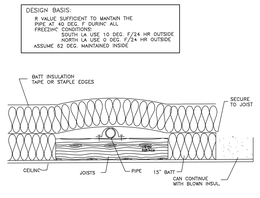

PIPE LEGEND
STEEL PIPE BLK SCH 10&40
CPVC PIPE ——————

MAXIMUM DISTANCE BETWEEN HANGERS							
	1"	1¼"	1½"	2"	2½"	3"	
CPVC PIPE	6'-0"	6'-6"	7'-0"	8'-0"	9'-0"	10'-0"	
STEEL PIPE	12'-0"	12'-0"	15'-0"	15'-0"	15'-0"	15'-0"	

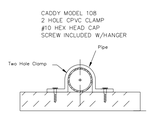

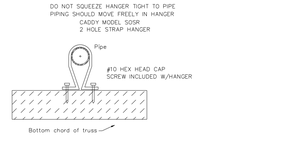

TYPICAL BRANCHLINE HANGER DETAIL

FIRE PROTECTION SHOP DRAWING ENGINEERING REVIEW
☒ Approved
☐ Approved as Noted
☐ Revise and Resubmit
☐ Not Approved
Review is for general conformance with the design intent. applicable codes, and NFPA standards. This is not a comprehensive check of dimensions, quantities, methods of fabrication, or coordination with other trades. Contractor is fully responsibility for: accuracy of dimensions, quantities, coordination with other trades, installation methods, field verification, or compliance with all contract documents and governing codes.
Reviewer: Derrick Shaver
Company: Shaver Fire Engineering (PE Design)
PE License No.: 115344
Date: 2/26/26 Project No.: 2025-11-03-04

PROJECT # 2025-11-03-04
TFM # 21689-C

RESIDENTIAL SPRINKLERS TO BE SPACED NO MORE THAN 18x18

SPRINKLER SYMBOL DESCRIPTION

Symbol	Make	Model	S.I.N.	K-Factor	Temp.	Style	Response	Finish	Coverage	NPT Size	Total
◉	RELIABLE	F1RES49	R3516	4.9	200	RECESSED PENDENT	QR	WHITE	STD	1/2"	72
◐	RELIABLE	F3QR56	R5714	5.6	200	RECESSED DRY PEND	QR	WHITE	STD	1/2"	
◉	VICTAULIC	FL-DRY/ VS1	V3506	5.6	200	DRY FLEX PENDENT	FR	WHITE	STD	1/2"	10
○	RELIABLE	AH-56	RA5626	5.6	212	ATTIC UPRIGHT	FR	BRASS	STD	1/2"	
Total Sprinklers Shown on This Sheet											89
Total Sprinklers Required on This Contract											512

THESE PLANS AND SPECIFICATIONS ARE NOT TO BE USED FOR CONSTRUCTION UNLESS SIGNED AND DATED BY THE AUTHORITY HAVING JURISDICTION. A FINAL CERTIFICATE OF COMPLETION WILL NOT BE ISSUED UNLESS THIS FORM IS ISSUED BY THE AUTHORITY HAVING JURISDICTION. No allowances, deletions or modifications of any kind are valid unless approved and signed by the Authority Having Jurisdiction at this office.
TENNESSEE STATE FIRE MARSHALL'S OFFICE

TRI-STATE SPRINKLER CORPORATION
3085 Fountainside Dr.
Suite 110
Germantown, Tn 38138
P (901)365-0616
F (901)365-7319

NAME Responsible Managing Employee
BOBBY R BLACKBURN
RME ID# 002
TENNESSEE
Bobby R. Blackburn

REVISIONS

No	Date	Description
1	12/17/2025	REVISED UNDERGROUND PIPING AND BUILDING C EXPANSION PIPING
2	1/16/2026	ADDED NOTES PER STATE FIRE MARSHALL REVIEW

This drawing is the property of Tri-State Sprinkler Corporation and is not to be reproduced or copied in whole or in part. It is to be used only for the Project and Site specifically identified herein. It is to be returned upon demand. Dimensions shown hereon are valid on the original drawing, the size of which is 30" x 42".

DRAWING TITLE
FIRE SPRINKLER PLAN
BUILDING C
LEVEL 1

DRAWN BY
SFPC-DW

SCALE
1/8" = 1'-0"

DATE
11-10-2025

JOB NUMBER
12056

THE RESERVES AT COBALT CIRCLE
1616 E. JEFFERSON STREET
BROWNSVILLE, TENNESSEE 38012

SHEET
FP6
6 of 7

FIELD SET TFM# 21689-A, 21689-B, 21689-C PROJECT# 2025-11-03-04

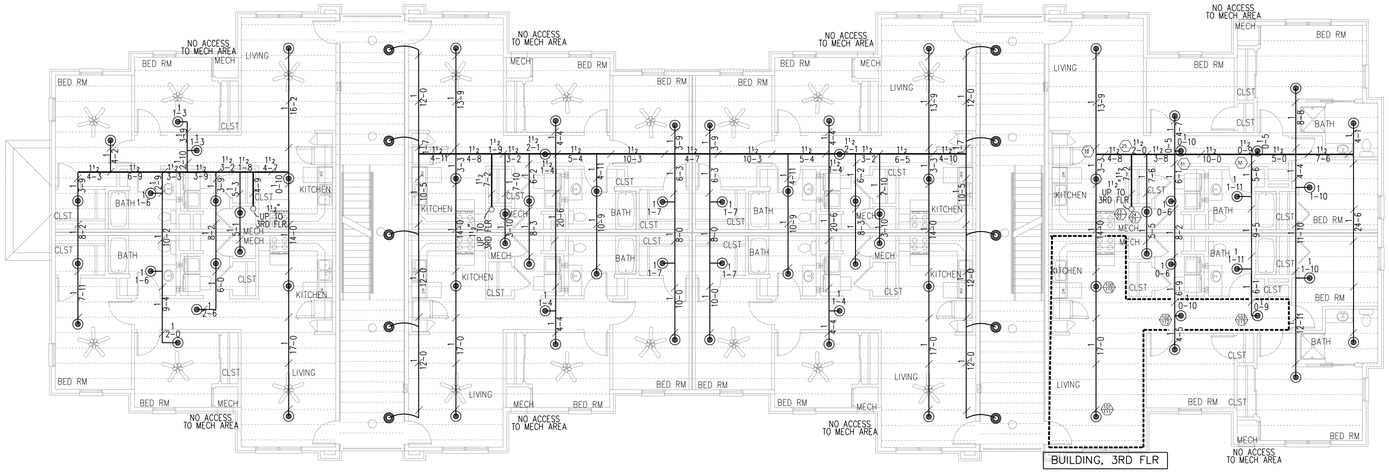

BUILDING C
FIRE PROTECTION PLAN- LEVELS 2 & 3

SCALE: 1/8" = 1'-0"

HYDRAULIC SYSTEM

THIS BUILDING IS PROTECTED BY A HYDRAULICALLY DESIGNED AUTOMATIC SPRINKLER SYSTEM

LOCATION	BUILDING C, 3RD FLR
NO. OF SPRINKLERS	4
BASIS OF DESIGN	
DENSITY	.05 GPM/SQ.FT.
DESIGNED AREA OF DISCHARGE	4HDS SQ.FT.
SYSTEM DEMAND	
1. GPM DISCHARGE	72.6 GPM
2. RESIDUAL PRESSURE AT THE BASE OF RISER NODE 9	56.13 PSI

SYSTEM DEMAND AT STREET

GPM REQUIRED:	172.6
PSI REQUIRED:	56.65
PSI AVAILABLE:	67.38
OVERAGE:	10.73 PSI = 15.9 %

VICTAULIC DRY FLEX WHITE CONCEALED SPRINKLERS
LENGTH TO BE 58" WITH VB1 BRACKET

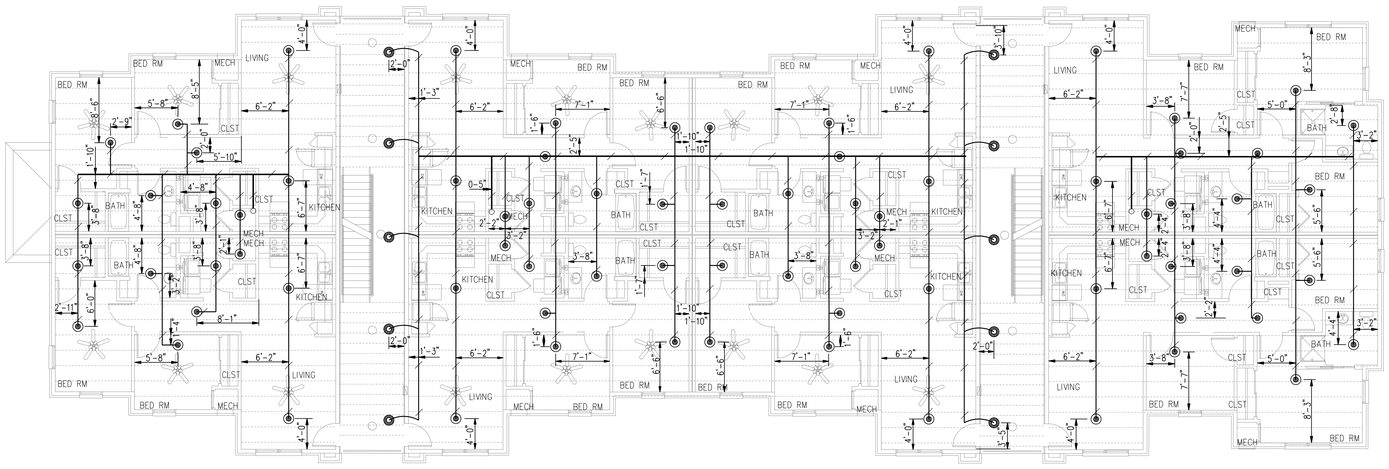



DROP DETAIL FOR SHEETROCK CEILINGS

BUILDING C
DIMENSION PLAN- LEVELS 2 & 3

SCALE: 1/8" = 1'-0"

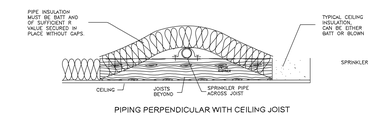

PIPING PERPENDICULAR WITH CEILING JOIST

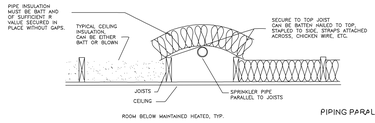

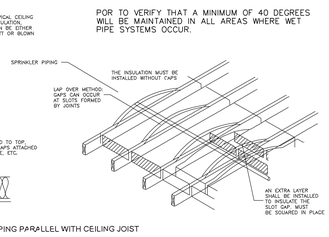

PIPING PARALLEL WITH CEILING JOIST

DESIGN BASIS:
R VALUE SUFFICIENT TO MAINTAIN THE PIPE AT 40 DEG. F DURING ALL FREEZING CONDITIONS
SOUTH LA USE 10 DEG. F/24 HR OUTSIDE
MEMPHIS USE 0 DEG. F/24 HR OUTSIDE
ASSUME 62 DEG. MAINTAINED INSIDE

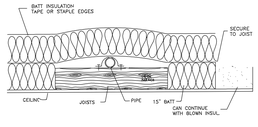

PIPE LEGEND
STEEL PIPE BLK. SCH. 10&40
CPVC PIPE

MAXIMUM DISTANCE BETWEEN HANGERS						
	1"	1¼"	1½"	2"	2½"	3"
CPVC PIPE	6'-0"	6'-6"	7'-0"	8'-0"	9'-0"	10'-0"
STEEL PIPE	12'-0"	12'-0"	15'-0"	15'-0"	15'-0"	15'-0"

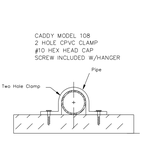

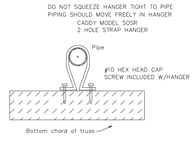

TYPICAL BRANCHLINE HANGER DETAIL

FIRE PROTECTION SHOP DRAWING ENGINEERING REVIEW

☒ Approved
☐ Approved as Noted
☐ Revise and Resubmit
☐ Not Approved

Review is for general conformance with the design intent, applicable codes, and NFPA standards. This is not a comprehensive check of dimensions, quantities, methods of fabrication, or coordination with other trades. Contractor is fully responsibility for; accuracy of dimensions, quantities, coordination with other trades, installation methods, field verification, or compliance with all contract documents and governing codes.

Reviewer: Derrick Shaver
Company: Shaver Fire Engineering & Design
PE License No.: 115344
Date: 2/26/26 Project No.: 2025-11-03-04

PROJECT # 2025-11-03-04
TFM # 21689-C

RESIDENTIAL SPRINKLERS TO BE SPACED NO MORE THAN 18x18

SPRINKLER SYMBOL DESCRIPTION

Symbol	Make	Model	S.I.N.	K-Factor	Temp.	Style	Response	Finish	Coverage	NPT Size	Total
◉	RELIABLE	F1RES49	R3516	4.9	200	RECESSED PENDENT	QR	WHITE	STD	1/2"	76
◐	RELIABLE	F3QR56	R5714	5.6	200	RECESSED DRY PEND	QR	WHITE	STD	1/2"	
●	VICTAULIC	FL-DRY/ VS1	V3506	5.6	200	DRY FLEX PENDENT	FR	WHITE	STD	1/2"	10
○	RELIABLE	A/H-56	RA5626	5.6	212	ATTIC UPRIGHT	FR	BRASS	STD	1/2"	
Total Sprinklers Shown on This Sheet											86
Total Sprinklers Required on This Contract											512

TRI-STATE SPRINKLER CORPORATION
3085 Fountainside Dr.
Suite 110
Germantown, Tn 38138
P (901)365-9616
F (901)365-7319

NAME Responsible Managing Employee
BOBBY R BLACKBURN
RME ID# 002
TENNESSEE

Bobby R. Blackburn

REVISIONS

No	Date	Description
1	12/17/2025	REVISED UNDERGROUND PIPING AND BUILDING C EXPANSION PIPING
2	1/16/2026	ADDED NOTES PER STATE FIRE MARSHALL REVIEW

This drawing is the property of TRI-State Sprinkler Corporation and is not to be reproduced or copied in whole or in part. It is to be used only for the Project and Site specifically identified herein. It is to be returned upon demand. Dimensions shown hereon are valid on the original drawing, the size of which is 30" x 42".

DRAWING TITLE
FIRE SPRINKLER PLAN
BUILDING C
LEVELS 2 & 3

DRAWN BY
SFPC-DW

SCALE
1/8" = 1'-0"

DATE
11-10-2025

JOB NUMBER
12056

THE RESERVES AT COBALT CIRCLE
1616 E. JEFFERSON STREET
BROWNSVILLE, TENNESSEE 38012

SHEET
FP7
7 of 7

FIELD SET TFM# 21689-A, 21689-B, 21689-C PROJECT# 2025-11-03-04

PLANS AND SPECIFICATIONS PREPARED TO BE KEPT ON THE JOB SITE AT ALL TIMES. A FINAL CERTIFICATE OF COMPLETION FOR THIS PROJECT OR PORTION OF THIS PROJECT IS ISSUED BY THE TENNESSEE STATE FIRE MARSHALL'S OFFICE.

No alterations, deletions or additions to these plans and specifications or modifications of any kind shall be made without the written approval of this office.

Hydraulics Summary Sheet

Dashboard Hydraulics

Project Information

Calculation Date: 2/26/2026 2:11 PM

RESERVES AT COBALT
BUILDING A (PROJECT# 2025-11-03-04)
1616 E. JEFFERSON STREET
TFN# 21689-A
BROWNSVILLE, TN. 38012

contract # 12056

system ID 1 **drawing ref** 3

building CLUBHOUSE
construction WOOD
occupancy LIGHT HAZARD
authority

Contractor Information

TRI-STATE SPRINKLER CORP.
3085 FOUNTAINSIDE DR.
SUITE 110
GERMANTOWN, TN. 38138

calculated by SFPC
telephone 901-365-9616
fax 901-365-7319
email

Hydraulics Criteria

density	.10 GPM/ft²
remote area	1784 ft²
spr coverage	150 ft²
sprs flowing	23

system type DRY
design std NFPA13
hazard LIGHT HAZARD
figure
curve

Sprinklers in Remote

No.	Mfgr	Mod	SIN#	Size	K
23	RELIABLE	AH56	RA5626	1/2"	5.60

Flow Test

static pressure	68.00 psi
residual pressure	52.00 psi
quantity flowing	1,000.0 GPM

date & time of flow test

location of flow test
EAST JEFFERSON STREET

TFM #21689-A
Project
#2025-11-03-04
RME #002

Supply / Demand Graph

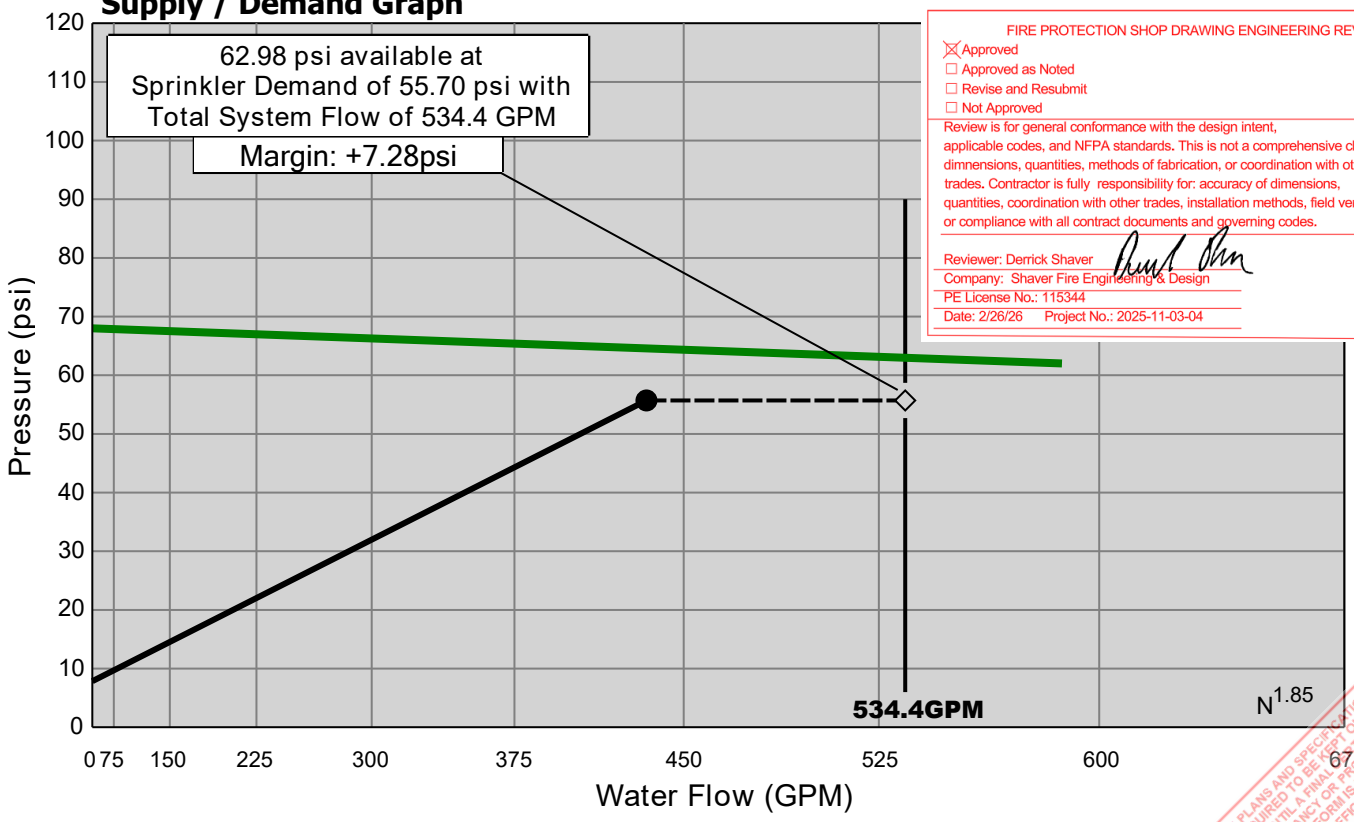

FIRE PROTECTION SHOP DRAWING ENGINEERING REVIEW
☒ Approved
☐ Approved as Noted
☐ Revise and Resubmit
☐ Not Approved
Review is for general conformance with the design intent, applicable codes, and NFPA standards. This is not a comprehensive check of dimensions, quantities, methods of fabrication, or coordination with other trades. Contractor is fully responsibility for: accuracy of dimensions, quantities, coordination with other trades, installation methods, field verification, or compliance with all contract documents and governing codes.
Reviewer: Derrick Shaver
Company: Shaver Fire Engineering & Design
PE License No.: 115344
Date: 2/26/26 Project No.: 2025-11-03-04

● Demand at sprinkler and interior hose flows ◇ Total System Demand including Hose Flows at Zero

FIELD SET TFM# 21689-A, 21689-B, 21689-C PROJECT# 2025-11-03-04

© Copyright 2024 Sigma Development Group

Node	Elev ft	Device	KFactor	Minimum Flow GPM	Node Pressure psi	Actual Discharge GPM	Notes
122	12.69	Sprinkler	5.60	15.00	7.17	15.00	
121	12.67	Sprinkler	5.60	15.00	7.87	15.71	
120	12.65	Sprinkler	5.60	15.00	8.57	16.39	
119	12.63	Sprinkler	5.60	15.00	10.67	18.29	
118	12.58	Sprinkler	5.60	15.00	12.32	19.66	
117	12.71	Sprinkler	5.60	15.00	8.47	16.30	
116	12.67	Sprinkler	5.60	15.00	9.39	17.16	
115	12.63	Sprinkler	5.60	15.00	10.31	17.98	
114	12.61	Sprinkler	5.60	15.00	12.30	19.64	
113	12.56	Sprinkler	5.60	15.00	13.84	20.83	
112	18.11	Sprinkler	5.60	15.00	11.54	19.03	
111	18.08	Sprinkler	5.60	15.00	12.49	19.79	
110	18.06	Sprinkler	5.60	15.00	13.86	20.85	
109	18.08	Sprinkler	5.60	15.00	12.60	19.87	
108	18.06	Sprinkler	5.60	15.00	13.62	20.67	
107	18.04	Sprinkler	5.60	15.00	14.59	21.39	
106	13.60	Sprinkler	5.60	15.00	17.55	23.46	
105	13.60	Sprinkler	5.60	15.00	17.34	23.32	
104	13.67	Sprinkler	5.60	15.00	8.13	15.96	
103	13.65	Sprinkler	5.60	15.00	8.85	16.66	
102	13.63	Sprinkler	5.60	15.00	10.01	17.72	
101	13.60	Sprinkler	5.60	15.00	11.92	19.33	
100	13.60	Sprinkler	5.60	15.00	12.04	19.43	
46	13.60				18.90	46.8	
45	10.35				21.90	46.8	
41	13.60				13.45	89.1	
40	10.35				17.85	89.1	
33	12.56				16.47	177.0	
32	18.04				15.80	121.6	
23	10.31				27.61	177.0	
22	10.29				27.74	298.5	

FIELD SET TFM# 21689-A, 21689-B, 21689-C PROJECT# 2025-11-03-04

© Copyright 2024 Sigma Development Group

THESE PLANS AND SPECIFICATIONS MUST BE RETAINED ON THE JOB SITE UNTIL A FINAL CERTIFICATE OF OCCUPANCY OR PROJECT COMPLETION FORM IS ISSUED BY THIS OFFICE.
No alterations, deletions, additions or modifications of any kind are allowed to this approved set without written permission of this office.
TENNESSEE STATE FIRE MARSHAL'S OFFICE

Node	Elev ft	Device	KFactor	Minimum Flow GPM	Node Pressure psi	Actual Discharge GPM	Notes
21	10.27				27.93	345.3	
20	10.27				27.98	434.4	
17	10.27				28.92	434.4	
16	10.25				30.36	434.4	
14	9.92				39.77	434.4	
13	7.50				41.52	434.4	
12	6.83				41.84	434.4	
11	3.92				44.76	434.4	
9	1.00				53.57	434.4	
8	0.00				54.01	434.4	Finished Floor Node
7	0.00				54.16	434.4	
2	0.00				55.18	434.4	
1	0.00				55.41	434.4	
0	0.00	Hose@Zero			55.70	100.0	

FIELD SET TFM# 21689-A, 21689-B, 21689-C PROJECT# 2025-11-03-04

© Copyright 2024 Sigma Development Group

THESE PLANS AND SPECIFICATIONS MUST BE KEPT ON THE JOB SITE UNTIL A FINAL CERTIFICATE OF OCCUPANCY OR PROJECT COMPLETION FORM IS ISSUED BY THIS OFFICE.
No alterations, deletions, additions or modifications of any kind are allowed to this approved set without written permission of this office.
TENNESSEE STATE FIRE MARSHAL'S OFFICE

From / To	Elev1 ft / Elev2 ft	$Q=k\sqrt{p}$	Pipe ID / Type	Flows Added GPM / Total	Inside Diameter in	Fittings	Length ft / Fitting ft / Total ft	C Value / Friction Loss psi/ft	Total (Pt) psi / Elev (Pe) psi / Frict (Pf) psi	Notes
121	12.67	5.3	1" Sch 10 C100		1.0970	0	Len 8.0 Ftg 0.0 Total 8.0	C = 100 0.08612	Pt 122) 7.175 Pe 0.009 Pf 0.689	
122	12.69		BN	15.0						
120	12.65	10.5	1¼" Sch 10 C100	15.7	1.4420	0	Len 8.0 Ftg 0.0 Total 8.0	C = 100 0.08561	Pt 121) 7.873 Pe 0.009 Pf 0.685	
121	12.67		BN	30.7						
119	12.63	14.4	1¼" Sch 10 C100	16.4	1.4420	E	Len 8.4 Ftg 2.6 Total 11.1	C = 100 0.18885	Pt 120) 8.567 Pe 0.009 Pf 2.090	
120	12.65		BN	47.1						
118	12.58	18.6	1½" Sch 10 C100	18.3	1.6820	0	Len 10.0 Ftg 0.0 Total 10.0	C = 100 0.16371	Pt 119) 10.666 Pe 0.018 Pf 1.637	
119	12.63		BN	65.4						
33	12.56	21.0	1½" Sch 10 C100	19.7	1.6820	T	Len 8.5 Ftg 7.1 Total 15.6	C = 100 0.26622	Pt 118) 12.321 Pe 0.009 Pf 4.142	
118	12.58		BN	85.0						

Total Pressure at Node 33) 16.472 psi

116	12.67	5.3	1" Sch 10 C100		1.0970	0	Len 9.0 Ftg 0.0 Total 9.0	C = 100 0.10038	Pt 117) 8.467 Pe 0.018 Pf 0.903	
117	12.71		BN	16.3						
115	12.63	10.4	1¼" Sch 10 C100	17.2	1.4420	0	Len 9.0 Ftg 0.0 Total 9.0	C = 100 0.10028	Pt 116) 9.389 Pe 0.018 Pf 0.903	
116	12.67		BN	33.5						
114	12.61	14.7	1¼" Sch 10 C100	18.0	1.4420	E	Len 6.3 Ftg 2.6 Total 8.9	C = 100 0.22223	Pt 115) 10.309 Pe 0.009 Pf 1.978	
115	12.63		BN	51.4						
113	12.56	19.1	1½" Sch 10 C100	19.6	1.6820	0	Len 8.0 Ftg 0.0 Total 8.0	C = 100 0.19098	Pt 114) 12.296 Pe 0.018 Pf 1.528	
114	12.61		BN	71.1						
33	12.56	22.6	1½" Sch 10 C100	20.8	1.6820	T	Len 1.5 Ftg 7.1 Total 8.6	C = 100 0.30729	Pt 113) 13.842 Pe 0.000 Pf 2.630	
113	12.56		BN	91.9						
23	10.31	33.7	1½" Sch 40 C100	85.0	1.6100	T	Len 2.3 Ftg 5.7 Total 8.0	C = 100 1.27772	Pt 33) 16.472 Pe 0.975 Pf 10.163	
33	12.56		NR	177.0						

Total Pressure at Node 23) 27.610 psi

FIELD SET TFM# 21689-A, 21689-B, 21689-C PROJECT# 2025-11-03-04

THESE PLANS AND SPECIFICATIONS ARE REQUIRED TO BE KEPT ON THE JOB SITE UNTIL A FINAL CERTIFICATE OF OCCUPANCY OR PROJECT COMPLETION FORM IS ISSUED BY THIS OFFICE. No alterations, deletions, additions or modifications of plans are allowed to this approved set without written permission of this office. TENNESSEE STATE FIRE MARSHAL'S OFFICE

© Copyright 2024 Sigma Development Group

From / To	Elev1 ft / Elev2 ft	$Q=k\sqrt{p}$	Pipe ID / Type	Flows Added GPM / Total	Inside Diameter in	Fittings	Length / Fitting / Total ft	C Value / Friction Loss psi/ft	Total (Pt) / Elev (Pe) / Frict (Pf) psi	Notes
111	18.08	5.4	1" Sch 10 C100		1.0970	0	Len 7.0 Ftg 0.0	C = 100	Pt 112) 11.542 Pe 0.009	
112	18.11		BN	19.0			Total 7.0	0.13369	Pf 0.936	
110	18.06	10.4	1¼" Sch 10 C100	19.8	1.4420	E	Len 7.7 Ftg 2.6	C = 100	Pt 111) 12.487 Pe 0.009	
111	18.08		BN	38.8			Total 10.3	0.13201	Pf 1.362	
32	18.04	15.0	1½" Sch 10 C100	20.8	1.6820	T	Len 6.9 Ftg 7.1	C = 100	Pt 110) 13.858 Pe 0.009	
110	18.06		BN	59.7			Total 14.0	0.13816	Pf 1.931	

Total Pressure at Node 32) 15.798 psi

108	18.06	5.4	1" Sch 10 C100		1.0970	0	Len 7.0 Ftg 0.0	C = 100	Pt 109) 12.596 Pe 0.009	
109	18.08		BN	19.9			Total 7.0	0.14494	Pf 1.015	
107	18.04	10.6	1¼" Sch 10 C100	20.7	1.4420	E	Len 4.1 Ftg 2.6	C = 100	Pt 108) 13.620 Pe 0.009	
108	18.06		BN	40.5			Total 6.7	0.14308	Pf 0.963	
32	18.04	15.6	1½" Sch 10 C100	21.4	1.6820	T	Len 1.1 Ftg 7.1	C = 100	Pt 107) 14.592 Pe 0.000	
107	18.04		BN	61.9			Total 8.1	0.14805	Pf 1.205	
22	10.29	23.1	1½" Sch 40 C100	59.7	1.6100	T	Len 7.8 Ftg 5.7	C = 100	Pt 32) 15.798 Pe 3.358	
32	18.04		NR	121.6			Total 13.5	0.63821	Pf 8.587	

Total Pressure at Node 22) 27.742 psi

46	13.60	5.4	1" Sch 10 C100		1.0970	T	Len 2.4 Ftg 4.4	C = 100	Pt 106) 17.550 Pe 0.000	
106	13.60		BN	23.5			Total 6.8	0.19698	Pf 1.349	

Total Pressure at Node 46) 18.899 psi

46	13.60	5.4	1" Sch 10 C100		1.0970	T	Len 3.6 Ftg 4.4	C = 100	Pt 105) 17.338 Pe 0.000	
105	13.60		BN	23.3			Total 8.0	0.19477	Pf 1.561	
45	10.35	10.0	1¼" Sch 10 C100	23.5	1.4420	T	Len 3.3 Ftg 5.3	C = 100	Pt 46) 18.899 Pe 1.408	
46	13.60		NR	46.8			Total 8.5	0.18644	Pf 1.594	
21	10.27	8.9	1¼" Sch 10 C100		1.4420	T	Len 26.8 Ftg 5.3	C = 100	Pt 45) 21.901 Pe 0.036	
45	10.35		BN	46.8			Total 32.1	0.18644	Pf 5.991	

FIELD SET TFM# 21689-A, 21689-B, 21689-C PROJECT# 2025-11-03-04

THESE PLANS AND SPECIFICATIONS ARE REQUIRED TO BE KEPT ON THE JOB SITE UNTIL A FINAL CERTIFICATE OF OCCUPANCY OR PROJECT COMPLETION FORM IS ISSUED BY THIS OFFICE.
No alterations or deviations or additions or modifications are allowed to this approved set without written permission of this office.
TENNESSEE STATE FIRE MARSHAL'S OFFICE

© Copyright 2024 Sigma Development Group

From / To	Elev1 ft / Elev2 ft	$Q=k\sqrt{p}$	Pipe ID / Type	Flows Added GPM / Total	Inside Diameter in	Fittings	Length ft / Fitting ft / Total ft	C Value / Friction Loss psi/ft	Total (Pt) psi / Elev (Pe) psi / Frict (Pf) psi	Notes
Total Pressure at Node 21) 27.928 psi										
103	13.65	5.4	1" Sch 10 C100		1.0970	E	Len 5.7 / Ftg 1.8	C = 100	Pt 104) 8.126	
104	13.67		BN	16.0			Total 7.4	0.09663	Pe 0.009 / Pf 0.719	
102	13.63	10.3	1¼" Sch 10 C100	16.7	1.4420	E/E	Len 6.7 / Ftg 5.3	C = 100	Pt 103) 8.854	
103	13.65		BN	32.6			Total 12.0	0.09574	Pe 0.009 / Pf 1.146	
101	13.60	14.6	1¼" Sch 10 C100	17.7	1.4420	E	Len 6.3 / Ftg 2.6	C = 100	Pt 102) 10.009	
102	13.63		BN	50.3			Total 8.9	0.21358	Pe 0.009 / Pf 1.901	
41	13.60	19.0	1½" Sch 10 C100	19.3	1.6820	T	Len 1.3 / Ftg 7.1	C = 100	Pt 101) 11.918	
101	13.60		BN	69.7			Total 8.3	0.18410	Pe 0.000 / Pf 1.530	
Total Pressure at Node 41) 13.448 psi										
41	13.60	5.3	1" Sch 10 C100		1.0970	T,E	Len 3.9 / Ftg 6.2	C = 100	Pt 100) 12.041	
100	13.60		BN	19.4			Total 10.1	0.13902	Pe 0.000 / Pf 1.407	
40	10.35	21.1	1½" Sch 10 C100	69.7	1.6820	T	Len 3.3 / Ftg 7.1	C = 100	Pt 41) 13.448	
41	13.60		NR	89.1			Total 10.3	0.29020	Pe 1.408 / Pf 2.992	
20	10.27	16.8	1½" Sch 40 C100		1.6100	T	Len 22.4 / Ftg 5.7	C = 100	Pt 40) 17.848	
40	10.35		BN	89.1			Total 28.1	0.35911	Pe 0.036 / Pf 10.098	
Total Pressure at Node 20) 27.982 psi										
22	10.29	33.6	4" Sch 10 C100		4.2600	0	Len 11.0 / Ftg 0.0	C = 100	Pt 23) 27.610	
23	10.31		FM	177.0			Total 11.0	0.01118	Pe 0.009 / Pf 0.123	
21	10.27	56.5	4" Sch 10 C100	121.6	4.2600	0	Len 6.0 / Ftg 0.0	C = 100	Pt 22) 27.742	
22	10.29		FM	298.5			Total 6.0	0.02942	Pe 0.009 / Pf 0.177	
20	10.27	65.3	4" Sch 10 C100	46.8	4.2600	0	Len 1.4 / Ftg 0.0	C = 100	Pt 21) 27.928	
21	10.27		FM	345.3			Total 1.4	0.03851	Pe 0.000 / Pf 0.055	
17	10.27	80.8	4" Sch 10 C100	89.1	4.2600	E	Len 6.6 / Ftg 9.4	C = 100	Pt 20) 27.982	
20	10.27		FM	434.4			Total 16.0	0.05889	Pe 0.000 / Pf 0.941	

FIELD SET TFM# 21689-A, 21689-B, 21689-C PROJECT# 2025-11-03-04

THESE PLANS AND SPECIFICATIONS ARE REQUIRED TO BE KEPT ON THE JOB SITE UNTIL A FINAL CERTIFICATE OF OCCUPANCY OR PROJECT COMPLETION FORM IS ISSUED BY THIS OFFICE.
No alterations or deviations or additions or modifications are allowed to this approved set without written permission of this office.
TENNESSEE STATE FIRE MARSHAL'S OFFICE

© Copyright 2024 Sigma Development Group

From / To	Elev1 ft / Elev2 ft	$Q=k\sqrt{p}$	Pipe ID / Type	Flows Added GPM / Total	Inside Diameter in	Fittings	Length ft / Fitting ft / Total ft	C Value / Friction Loss psi/ft	Total (Pt) psi / Elev (Pe) psi / Frict (Pf) psi	Notes
16	10.25	78.8	4" Sch 10 C100		4.2600	E	Len 14.8 Ftg 9.4 Total 24.2	C = 100 0.05889	Pt 17) 28.923 Pe 0.009 Pf 1.426	
17	10.27		FM	434.4						
14	9.92	68.9	4" Sch 10 C100		4.2600	0	Len 157.4 Ftg 0.0 Total 157.4	C = 100 0.05889	Pt 16) 30.359 Pe 0.144 Pf 9.271	
16	10.25		FM	434.4						
13	7.50	67.4	4" Sch 10 C100		4.2600	0/E	Len 2.4 Ftg 9.4 Total 11.8	C = 100 0.05889	Pt 14) 39.774 Pe 1.047 Pf 0.695	
14	9.92		FR	434.4						
12	6.83	67.2	4" Sch 10 C100		4.2600	0	Len 0.7 Ftg 0.0 Total 0.7	C = 100 0.05889	Pt 13) 41.516 Pe 0.289 Pf 0.039	
13	7.50		FR	434.4						
11	3.92	64.9	4" Sch 10		4.2600	BV,DPV	Len 2.9 Ftg 15.8 Total 18.7	C = 120 0.04203	Pt 12) 41.844 Pe 1.264 Pf 0.787	4" DRY PIPE VALVE DRY PIPE VALVE: Loss = 0.86
12	6.83		FR	434.4						
9	1.00	59.4	4" Sch 10		4.2600	CDDC	Len 2.9 Ftg 0.0 Total 2.9	C = 120 0.04203	Pt 11) 44.758 Pe 1.264 Pf 0.123	4" Ames Colt Double Check Assembly Model C200: Loss = 7.43
11	3.92		FR	434.4						
8	0.00	59.1	6" DI		5.8903	0	Len 1.0 Ftg 0.0 Total 1.0	C = 140 0.00652	Pt 9) 53.572 Pe 0.433 Pf 0.007	
9	1.00		FR	434.4						
7	0.00	59.0	6" DI		5.8903	E	Len 6.0 Ftg 16.1 Total 22.1	C = 140 0.00652	Pt 8) 54.012 Pe 0.000 Pf 0.144	Finished Floor Node (8)
8	0.00		FR	434.4						
2	0.00	58.5	6" PVC CL150		6.0900	T,E, GV/E	Len 116.4 Ftg 94.0 Total 210.4	C = 150 0.00488	Pt 7) 54.156 Pe 0.000 Pf 1.027	
7	0.00		FR	434.4						
1	0.00	58.4	8" PVC CL150		7.9800	0	Len 175.6 Ftg 0.0 Total 175.6	C = 150 0.00131	Pt 2) 55.183 Pe 0.000 Pf 0.230	
2	0.00		UN	434.4						
0	0.00	58.2	6" PVC CL150		6.0900	T,GV	Len 7.9 Ftg 50.8 Total 58.8	C = 150 0.00488	Pt 1) 55.413 Pe 0.000 Pf 0.287	100 GPM HOSE ALLOWANCE
1	0.00		UN	434.4						

Total Pressure at Node 0) 55.700 psi

FIELD SET TFM# 21689-A, 21689-B, 21689-C PROJECT# 2025-11-03-04

THESE PLANS AND SPECIFICATIONS ARE REQUIRED TO BE KEPT ON THE JOB SITE UNTIL A FINAL CERTIFICATE OF OCCUPANCY OR PROJECT COMPLETION FORM IS ISSUED BY THIS OFFICE. No alterations, additions or modifications of these plans are allowed to this approved set without written permission of this office. TENNESSEE STATE FIRE MARSHAL'S OFFICE

© Copyright 2024 Sigma Development Group

Ductile Iron Underground					
6" DI		Inside Dia: 5.8903 in		CValue: 140	7.0'
E	*Elbow*	*14.0 ft*	*corrected to*	*16.1 ft*	1 ea
PVC U.G. C900 CL150					
6" PVC CL150		Inside Dia: 6.0900 in		CValue: 150	124.3'
E	*Elbow*	*14.0 ft*	*corrected to*	*21.6 ft*	2 ea
T	*Tee*	*30.0 ft*	*corrected to*	*46.2 ft*	2 ea
GV	*Gate Valve*	*3.0 ft*	*corrected to*	*4.6 ft*	2 ea
Schedule 10					
4" Sch 10		Inside Dia: 4.2600 in		CValue: 120	5.8'
BV	*Butterfly Valve*	*12.0 ft*	*corrected to*	*15.8 ft*	1 ea
Schedule 10 Dry					
1" Sch 10 C100		Inside Dia: 1.0970 in		CValue: 100	46.6'
E	*Elbow*	*2.0 ft*	*corrected to*	*1.8 ft*	2 ea
T	*Tee*	*5.0 ft*	*corrected to*	*4.4 ft*	3 ea
1¼" Sch 10 C100		Inside Dia: 1.4420 in		CValue: 100	86.4'
E	*Elbow*	*3.0 ft*	*corrected to*	*2.6 ft*	7 ea
T	*Tee*	*6.0 ft*	*corrected to*	*5.3 ft*	2 ea
1½" Sch 10 C100		Inside Dia: 1.6820 in		CValue: 100	40.5'
T	*Tee*	*8.0 ft*	*corrected to*	*7.1 ft*	6 ea
4" Sch 10 C100		Inside Dia: 4.2600 in		CValue: 100	200.3'
E	*Elbow*	*10.0 ft*	*corrected to*	*9.4 ft*	3 ea
Schedule 40 Dry					
1½" Sch 40 C100		Inside Dia: 1.6100 in		CValue: 100	32.4'
T	*Tee*	*8.0 ft*	*corrected to*	*5.7 ft*	3 ea

FIELD SET TFM# 21689-A, 21689-B, 21689-C PROJECT# 2025-11-03-04

THESE PLANS AND SPECIFICATIONS ARE REQUIRED TO BE KEPT ON THE JOB SITE UNTIL A FINAL CERTIFICATE OF OCCUPANCY OR PROJECT COMPLETION FORM IS ISSUED BY THIS OFFICE.
No alterations, deletions, additions or modifications of these plans are allowed to this approved set without written permission of this office.
TENNESSEE STATE FIRE MARSHAL'S OFFICE

© Copyright 2024 Sigma Development Group

4" Ames Colt Double Check Assembly

CDDC

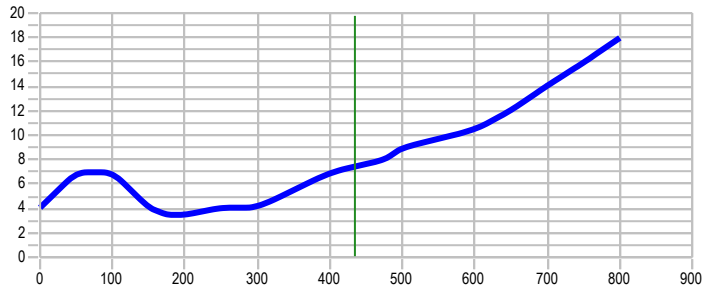

Model C200

Nominal Diameter: 4 in

Located on Pipe: 9-11

Flow Through Device: 434.4 GPM

Calculated Loss: 7.43 psi

4" DRY PIPE VALVE

DPV

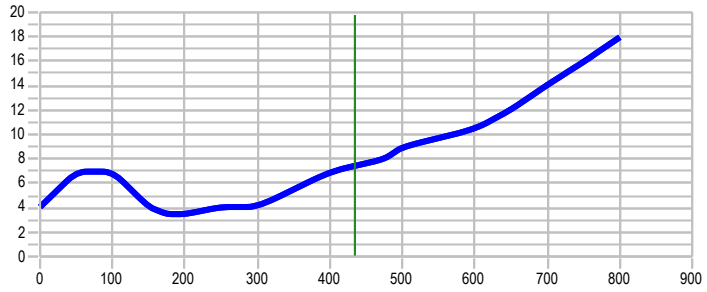

DRY PIPE VALVE

Nominal Diameter: 4 in

Located on Pipe: 11-12

Flow Through Device: 434.4 GPM

Calculated Loss: 0.86 psi

FIELD SET TFM# 21689-A, 21689-B, 21689-C PROJECT# 2025-11-03-04

THESE PLANS AND SPECIFICATIONS ARE REQUIRED TO BE KEPT ON THE JOB SITE UNTIL A FINAL CERTIFICATE OF OCCUPANCY OR PROJECT COMPLETION FORM IS ISSUED BY THIS OFFICE.
No alterations, deletions, additions or modifications of these plans are allowed to this approved set without written permission of this office.
TENNESSEE STATE FIRE MARSHAL'S OFFICE

© Copyright 2024 Sigma Development Group

Hydraulics Summary Sheet

Dashboard Hydraulics

Project Information

Calculation Date: 2/26/2026 2:15 PM

RESERVES AT COBALT
BUILDING A (PROJECT # 2025-11-03-04)
1616 E. JEFFERSON STREET
TFN# 21689-A
BROWNSVILLE, TN. 38012

contract # 12056

system ID 1 **drawing ref** 3

building CLUBHOUSE
construction WOOD
occupancy LIGHT HAZARD
authority

Contractor Information

TRI-STATE SPRINKLER CORP.
3085 FOUNTAINSIDE DR.
SUITE 110
GERMANTOWN, TN. 38138

calculated by SFPC
telephone 901-365-9616
fax 901-365-7319
email

Hydraulics Criteria

density .05 GPM/ft²
remote area 3HEADS ft²
spr coverage 324 ft²
sprs flowing 3

system type WET
design std NFPA13R
hazard LIGHT HAZARD
figure
curve

Sprinklers in Remote

No.	Mfgr	Mod	SIN#	Size	K
3	RELIABLE	F1RES49	R3516	1/2"	4.90

Flow Test

static pressure 68.00 psi
residual pressure 52.00 psi
quantity flowing 1,000.0 GPM
date & time of flow test

location of flow test
EAST JEFFERSON STREET

TFM #21689-A
Project
#2025-11-03-04
RME #002

FIRE PROTECTION SHOP DRAWING ENGINEERING REVIEW
☒ Approved
☐ Approved as Noted
☐ Revise and Resubmit
☐ Not Approved
Review is for general conformance with the design intent, applicable codes, and NFPA standards. This is not a comprehensive check of dimnensions, quantities, methods of fabrication, or coordination with other trades. Contractor is fully responsibility for: accuracy of dimensions, quantities, coordination with other trades, installation methods, field verification, or compliance with all contract documents and governing codes.
Reviewer: Derrick Shaver
Company: Shaver Fire Engineering & Design
PE License No.: 115344
Date: 2/26/26 Project No.: 2025-11-03-04

BUILDING A, 3RD FLOOR - Supply / Demand Graph

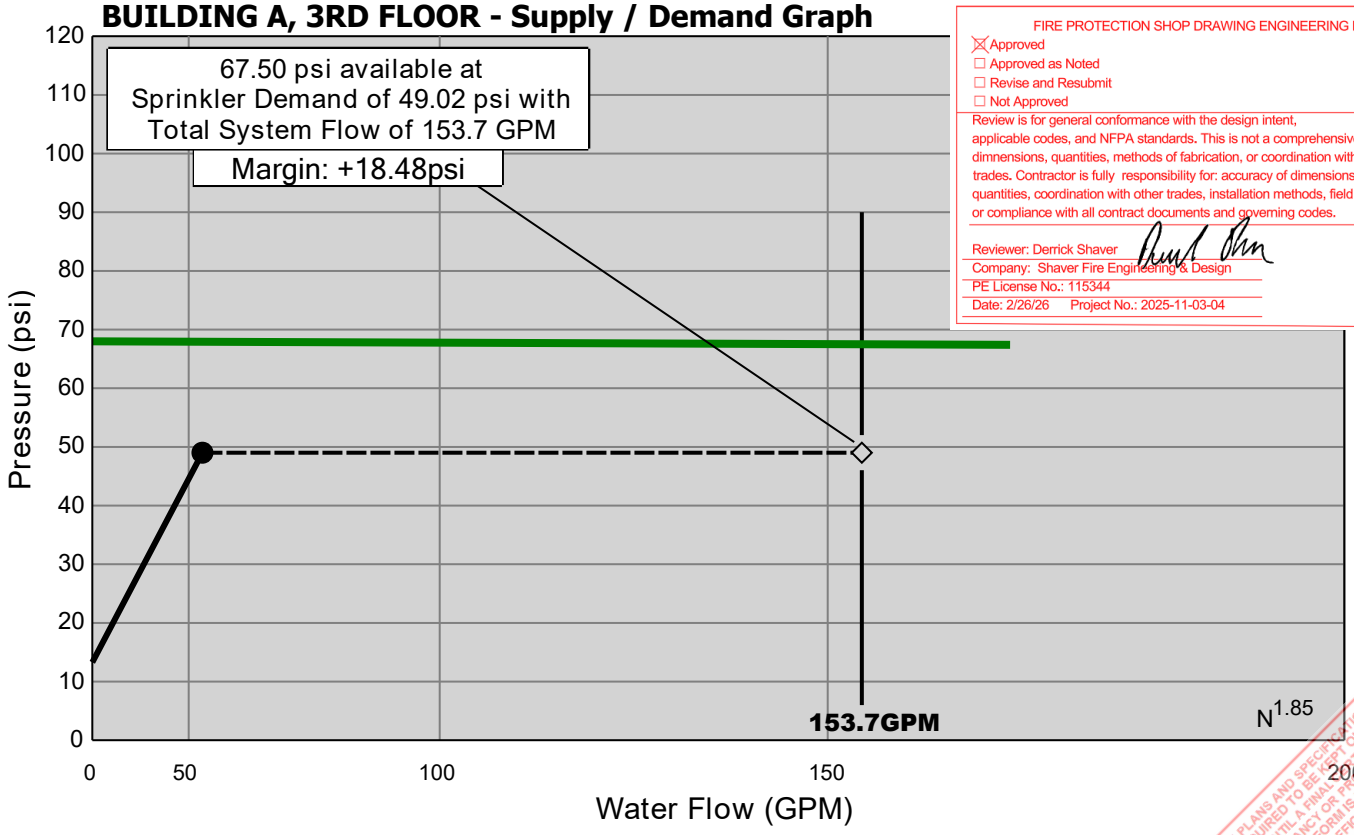

● Demand at sprinkler and interior hose flows
◇ Total System Demand including Hose Flows at Zero

FIELD SET TFM# 21689-A, 21689-B, 21689-C PROJECT# 2025-11-03-04

THESE PLANS AND SPECIFICATIONS ARE REQUIRED TO BE KEPT ON THE JOB SITE UNTIL A FINAL CERTIFICATE OF OCCUPANCY OR PROJECT COMPLETION FORM IS ISSUED BY THIS OFFICE.
No additions, deletions, additions or modifications of any kind are allowed to this approved set without written permission of this office.
TENNNESSEE STATE FIRE MARSHAL'S OFFICE

© Copyright 2024 Sigma Development Group

Node	Elev ft	Device	KFactor	Minimum Flow GPM	Node Pressure psi	Actual Discharge GPM	Notes
112	30.00	**Sprinkler**	4.90	17.00	15.57	19.34	
111	30.00	**Sprinkler**	4.90	17.00	12.04	17.00	
110	30.00	**Sprinkler**	4.90	17.00	12.58	17.38	
102	30.67				15.57	19.3	
101	30.67				11.97	17.0	
100	30.67				12.83	34.4	
31	30.67				17.89	19.3	
30	30.67				17.80	34.4	
25	30.67				17.94	53.7	
24	30.67				19.64	53.7	
23	20.17				24.91	53.7	
22	9.67				30.59	53.7	
20	9.67				31.88	53.7	
16	9.67				36.60	53.7	
13	7.50				38.73	53.7	
12	6.83				39.02	53.7	
11	3.92				40.33	53.7	
9	1.00				48.56	53.7	
8	0.00				48.99	53.7	Finished Floor Node
7	0.00				48.99	53.7	
2	0.00				49.01	53.7	
1	0.00				49.02	53.7	
0	0.00	**Hose@Zero**			49.02	100.0	

FIELD SET TFM# 21689-A, 21689-B, 21689-C PROJECT# 2025-11-03-04

THESE PLANS AND SPECIFICATIONS MUST BE KEPT ON THE JOB SITE UNTIL A FINAL CERTIFICATE OF OCCUPANCY OR PROJECT COMPLETION FORM IS ISSUED BY THIS OFFICE.
No alterations, deletions, additions or modifications of any kind are allowed to this approved set without written permission of this office.
TENNESSEE STATE FIRE MARSHAL'S OFFICE

© Copyright 2024 Sigma Development Group

BUILDING A, 3RD FLOOR

TRI-STATE SPRINKLER CORP.
RESERVES AT COBALT
BUILDING A (PROJECT # 2025-11-03-04)

NotesThere are 0 sprinklers in this remote area.

FIELD SET TFM# 21689-A, 21689-B, 21689-C PROJECT# 2025-11-03-04

THESE PLANS AND SPECIFICATIONS ARE REQUIRED TO BE KEPT ON THE JOB SITE UNTIL A FINAL CERTIFICATE OF OCCUPANCY OR PROJECT COMPLETION FORM IS ISSUED BY THIS OFFICE.
No alterations, deletions, additions or revisions of any kind are allowed to this approved set without written permission of this office.
TENNESSEE STATE FIRE MARSHAL'S OFFICE

© Copyright 2024 Sigma Development Group

Dashboard Hydraulics

Pipe Information

From / To	Elev1 ft / Elev2 ft	$Q=k\sqrt{p}$	Pipe ID / Type	Flows Added GPM / Total	Inside Diameter in	Fittings	Length ft / Fitting ft / Total ft	C Value / Friction Loss psi/ft	Total (Pt) psi / Elev (Pe) psi / Frict (Pf) psi	Notes
101	30.67	4.9	1" CPVC		1.1010	E	Len 0.7	C = 150	Pt 111) 12.036	
111	30.00		DR	17.0			Ftg 3.8		Pe -0.289	
							Total 4.5	0.05037	Pf 0.226	
100	30.67	4.7	1" CPVC		1.1010	0	Len 17.0	C = 150	Pt 101) 11.973	
101	30.67		BN	17.0			Ftg 0.0		Pe 0.000	
							Total 17.0	0.05037	Pf 0.856	
Total Pressure at Node 100) 12.830 psi										
102	30.67	4.9	1" CPVC		1.1010	E	Len 0.7	C = 150	Pt 112) 15.574	
112	30.00		DR	19.3			Ftg 3.8		Pe -0.289	
							Total 4.5	0.06393	Pf 0.287	
31	30.67	4.6	1" CPVC		1.1010	T/E	Len 22.8	C = 150	Pt 102) 15.572	
102	30.67		BN	19.3			Ftg 13.4		Pe 0.000	
							Total 36.2	0.06393	Pf 2.315	
Total Pressure at Node 31) 17.887 psi										
100	30.67	4.9	1" CPVC		1.1010	T	Len 0.7	C = 150	Pt 110) 12.582	
110	30.00		DR	17.4			Ftg 9.6		Pe -0.289	
							Total 10.2	0.05248	Pf 0.537	
30	30.67	8.1	1" CPVC	17.0	1.1010	T	Len 17.3	C = 150	Pt 100) 12.830	
100	30.67		BN	34.4			Ftg 9.6		Pe 0.000	
							Total 26.8	0.18538	Pf 4.969	
Total Pressure at Node 30) 17.799 psi										
25	30.67	4.6	1½" CPVC		1.5980	0	Len 4.8	C = 150	Pt 31) 17.887	
31	30.67		FM	19.3			Ftg 0.0		Pe 0.000	
							Total 4.8	0.01042	Pf 0.050	
Total Pressure at Node 25) 17.937 psi										
25	30.67	8.1	1½" CPVC		1.5980	0	Len 4.6	C = 150	Pt 30) 17.799	
30	30.67		FM	34.4			Ftg 0.0		Pe 0.000	
							Total 4.6	0.03021	Pf 0.138	
24	30.67	12.1	1½" CPVC	19.3	1.5980	E/T	Len 7.2	C = 150	Pt 25) 17.937	
25	30.67		FM	53.7			Ftg 17.5		Pe 0.000	
							Total 24.6	0.06897	Pf 1.699	
23	20.17	10.8	1½" CPVC		1.5980	0	Len 10.5	C = 150	Pt 24) 19.637	
24	30.67		FM	53.7			Ftg 0.0		Pe 4.550	
							Total 10.5	0.06897	Pf 0.724	

FIELD SET TFM# 21689-A, 21689-B, 21689-C PROJECT# 2025-11-03-04

THESE PLANS AND SPECIFICATIONS ARE REQUIRED TO BE KEPT ON THE JOB SITE UNTIL A FINAL CERTIFICATE OF OCCUPANCY OR PROJECT COMPLETION FORM IS ISSUED BY THIS OFFICE.
No alterations, additions or modifications of these plans are allowed to this approved set without written permission of this office.
TENNESSEE STATE FIRE MARSHAL'S OFFICE

© Copyright 2024 Sigma Development Group

From / To	Elev1 ft / Elev2 ft	$Q=k\sqrt{p}$	Pipe ID / Type	Flows Added GPM / Total	Inside Diameter in	Fittings	Length ft / Fitting ft / Total ft	C Value / Friction Loss psi/ft	Total (Pt) psi / Elev (Pe) psi / Frict (Pf) psi	Notes
22	9.67	9.7	1½" CPVC		1.5980	E	Len 10.5 Ftg 5.8 Total 16.3	C = 150 0.06897	Pt 23) 24.911 Pe 4.550 Pf 1.126	
23	20.17		FM	53.7						
20	9.67	9.5	1½" CPVC		1.5980	T	Len 7.2 Ftg 11.6 Total 18.8	C = 150 0.06897	Pt 22) 30.586 Pe 0.000 Pf 1.298	
22	9.67		FM	53.7						
16	9.67	8.9	2" CPVC		2.0030	6E/4E	Len 140.8 Ftg 64.8 Total 205.6	C = 150 0.02296	Pt 20) 31.884 Pe 0.000 Pf 4.720	
20	9.67		FM	53.7						
13	7.50	8.6	2" Sch 10		2.1570	T,E/BV, CV,E	Len 3.5 Ftg 45.5 Total 49.0	C = 120 0.02418	Pt 16) 36.604 Pe 0.939 Pf 1.186	
16	9.67		FR	53.7						
12	6.83	8.6	4" Sch 10 C100		4.2600	0	Len 0.7 Ftg 0.0 Total 0.7	C = 100 0.00123	Pt 13) 38.729 Pe 0.289 Pf 0.001	
13	7.50		FR	53.7						
11	3.92	8.5	4" Sch 10		4.2600	BV,DPV	Len 2.9 Ftg 15.8 Total 18.7	C = 120 0.00088	Pt 12) 39.019 Pe 1.264 Pf 0.016	4" DRY PIPE VALVE DRY PIPE VALVE: Loss = 0.03
12	6.83		FR	53.7						
9	1.00	7.7	4" Sch 10		4.2600	CDDC	Len 2.9 Ftg 0.0 Total 2.9	C = 120 0.00088	Pt 11) 40.329 Pe 1.264 Pf 0.003	4" Ames Colt Double Check Assembly Model C200: Loss = 6.96
11	3.92		FR	53.7						
8	0.00	7.7	6" DI		5.8903	0	Len 1.0 Ftg 0.0 Total 1.0	C = 140 0.00014	Pt 9) 48.555 Pe 0.433 Pf 0.000	
9	1.00		FR	53.7						
7	0.00	7.7	6" DI		5.8903	E	Len 6.0 Ftg 16.1 Total 22.1	C = 140 0.00014	Pt 8) 48.989 Pe 0.000 Pf 0.003	Finished Floor Node (8)
8	0.00		FR	53.7						
2	0.00	7.7	6" PVC CL150		6.0900	T,E, GV/E	Len 116.4 Ftg 94.0 Total 210.4	C = 150 0.00010	Pt 7) 48.992 Pe 0.000 Pf 0.021	
7	0.00		FR	53.7						
1	0.00	7.7	8" PVC CL150		7.9800	0	Len 175.6 Ftg 0.0 Total 175.6	C = 150 0.00003	Pt 2) 49.013 Pe 0.000 Pf 0.005	
2	0.00		UN	53.7						
0	0.00	7.7	6" PVC CL150		6.0900	T,GV	Len 7.9 Ftg 50.8 Total 58.8	C = 150 0.00010	Pt 1) 49.018 Pe 0.000 Pf 0.006	100 GPM HOSE ALLOWANCE
1	0.00		UN	53.7						

FIELD SET TFM# 21689-A, 21689-B, 21689-C PROJECT# 2025-11-03-04

THESE PLANS AND SPECIFICATIONS ARE REQUIRED TO BE KEPT ON THE JOB SITE UNTIL A FINAL CERTIFICATE OF OCCUPANCY OR PROJECT COMPLETION FORM IS ISSUED BY THIS OFFICE.
No alterations or deletions or additions or modifications of these plans are allowed to this approved set without the written permission of this office.
TENNESSEE STATE FIRE MARSHAL'S OFFICE

© Copyright 2024 Sigma Development Group

Pipe Information

From	Elev1 ft	$Q=k\sqrt{p}$	Pipe ID	Flows Added GPM	Inside Diameter in	Fittings	Length ft	C Value	Total (Pt) psi	Notes
To	Elev2 ft		Type	Total			Fitting ft	Friction Loss psi/ft	Elev (Pe) psi	
							Total ft		Frict (Pf) psi	

Total Pressure at Node 0) 49.024 psi

FIELD SET TFM# 21689-A, 21689-B, 21689-C PROJECT# 2025-11-03-04

THESE PLANS AND SPECIFICATIONS ARE REQUIRED TO BE KEPT ON THE JOB SITE UNTIL A FINAL CERTIFICATE OF OCCUPANCY OR PROJECT COMPLETION FORM IS ISSUED BY THIS OFFICE.
No alterations, deletions, additions or modifications of these plans are allowed to this approved set without written permission of this office.
TENNESSEE STATE FIRE MARSHAL'S OFFICE

© Copyright 2024 Sigma Development Group

Component Legend

CPVC

1" CPVC		Inside Dia: 1.1010 in		CValue: 150		59.1'
	E *Elbow*	*2.0 ft*	*corrected to*	*3.8 ft*		3 ea
	T *Tee*	*5.0 ft*	*corrected to*	*9.6 ft*		3 ea
1½" CPVC		Inside Dia: 1.5980 in		CValue: 150		44.8'
	E *Elbow*	*4.0 ft*	*corrected to*	*5.8 ft*		2 ea
	T *Tee*	*8.0 ft*	*corrected to*	*11.6 ft*		2 ea
2" CPVC		Inside Dia: 2.0030 in		CValue: 150		140.8'
	E *Elbow*	*5.0 ft*	*corrected to*	*6.5 ft*		7 ea

Ductile Iron Underground

6" DI		Inside Dia: 5.8903 in		CValue: 140		7.0'
	E *Elbow*	*14.0 ft*	*corrected to*	*16.1 ft*		1 ea

PVC U.G. C900 CL150

6" PVC CL150		Inside Dia: 6.0900 in		CValue: 150		124.3'
	E *Elbow*	*14.0 ft*	*corrected to*	*21.6 ft*		2 ea
	T *Tee*	*30.0 ft*	*corrected to*	*46.2 ft*		2 ea
	GV *Gate Valve*	*3.0 ft*	*corrected to*	*4.6 ft*		2 ea

Schedule 10

2" Sch 10		Inside Dia: 2.1570 in		CValue: 120		3.5'
	E *Elbow*	*5.0 ft*	*corrected to*	*6.2 ft*		2 ea
	T *Tee*	*10.0 ft*	*corrected to*	*12.3 ft*		1 ea
	BV *Butterfly Valve*	*6.0 ft*	*corrected to*	*7.4 ft*		1 ea
	CV *Check Valve*	*11.0 ft*	*corrected to*	*13.5 ft*		1 ea
4" Sch 10		Inside Dia: 4.2600 in		CValue: 120		5.8'
	BV *Butterfly Valve*	*12.0 ft*	*corrected to*	*15.8 ft*		1 ea

FIELD SET TFM# 21689-A, 21689-B, 21689-C PROJECT# 2025-11-03-04

THESE PLANS AND SPECIFICATIONS ARE REQUIRED TO BE KEPT ON THE JOB SITE UNTIL A FINAL CERTIFICATE OF OCCUPANCY OR PROJECT COMPLETION FORM IS ISSUED BY THIS OFFICE.
No alterations, additions or modifications of these plans are allowed to this approved set without written permission of this office.
TENNESSEE STATE FIRE MARSHAL'S OFFICE

© Copyright 2024 Sigma Development Group

4" Ames Colt Double Check Assembly

CDDC

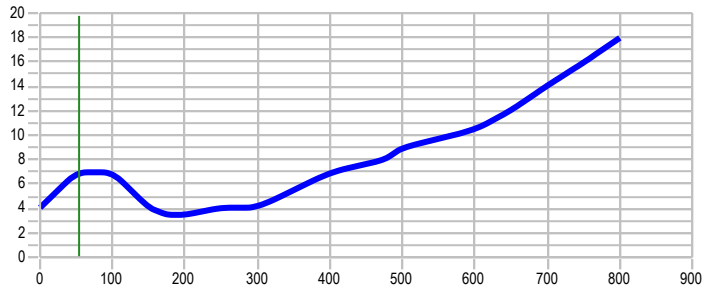

Model C200

Nominal Diameter: 4 in

Located on Pipe: 9-11

Flow Through Device: 53.7 GPM

Calculated Loss: 6.96 psi

4" DRY PIPE VALVE

DPV

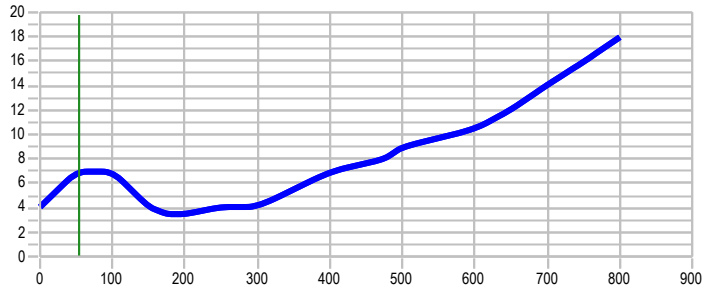

DRY PIPE VALVE

Nominal Diameter: 4 in

Located on Pipe: 11-12

Flow Through Device: 53.7 GPM

Calculated Loss: 0.03 psi

FIELD SET TFM# 21689-A, 21689-B, 21689-C PROJECT# 2025-11-03-04

© Copyright 2024 Sigma Development Group

THESE PLANS AND SPECIFICATIONS ARE REQUIRED TO BE KEPT ON THE JOB SITE UNTIL A FINAL CERTIFICATE OF OCCUPANCY OR PROJECT COMPLETION FORM IS ISSUED BY THIS OFFICE.
No alterations, deletions, additions or modifications of these plans are allowed to this approved set without written permission of this office.
TENNESSEE STATE FIRE MARSHAL'S OFFICE

Hydraulics Summary Sheet

Dashboard Hydraulics

Project Information

Calculation Date: 2/26/2026 2:15 PM

RESERVES AT COBALT
BUILDING B (PROJECT# 2025-11-03-04)
1616 E. JEFFERSON STREET
TFN# 21689-B
BROWNSVILLE, TN. 38012

contract # 12056

system ID 1 **drawing ref** 5

building APT
construction WOOD
occupancy LIGHT HAZARD
authority

Contractor Information

TRI-STATE SPRINKLER CORP.
3085 FOUNTAINSIDE DR.
SUITE 110
GERMANTOWN, TN. 38138

calculated by SFPC
telephone 901-365-9616
fax 901-365-7319
email

Hydraulics Criteria

density	.05 GPM/ft²
remote area	4HEADS ft²
spr coverage	324 ft²
sprs flowing	4

system type WET
design std NFPA13R
hazard LIGHT HAZARD
figure
curve

Sprinklers in Remote

No.	Mfgr	Mod	SIN#	Size	K
4	RELIABLE	F1RES49	R3516	1/2"	4.90

Flow Test

static pressure	68.00	psi
residual pressure	52.00	psi
quantity flowing	1,000.0	GPM

date & time of flow test

location of flow test
EAST JEFFERSON STREET

TFM #21689-A
Project
#2025-11-03-04
RME #002

FIRE PROTECTION SHOP DRAWING ENGINEERING REVIEW
☒ Approved
☐ Approved as Noted
☐ Revise and Resubmit
☐ Not Approved
Review is for general conformance with the design intent, applicable codes, and NFPA standards. This is not a comprehensive check of dimnensions, quantities, methods of fabrication, or coordination with other trades. Contractor is fully responsibility for: accuracy of dimensions, quantities, coordination with other trades, installation methods, field verification, or compliance with all contract documents and governing codes.
Reviewer: Derrick Shaver
Company: Shaver Fire Engineering & Design
PE License No.: 115344
Date: 2/26/26 Project No.: 2025-11-03-04

BUILDING B, 3RD FLOOR - Supply / Demand Graph

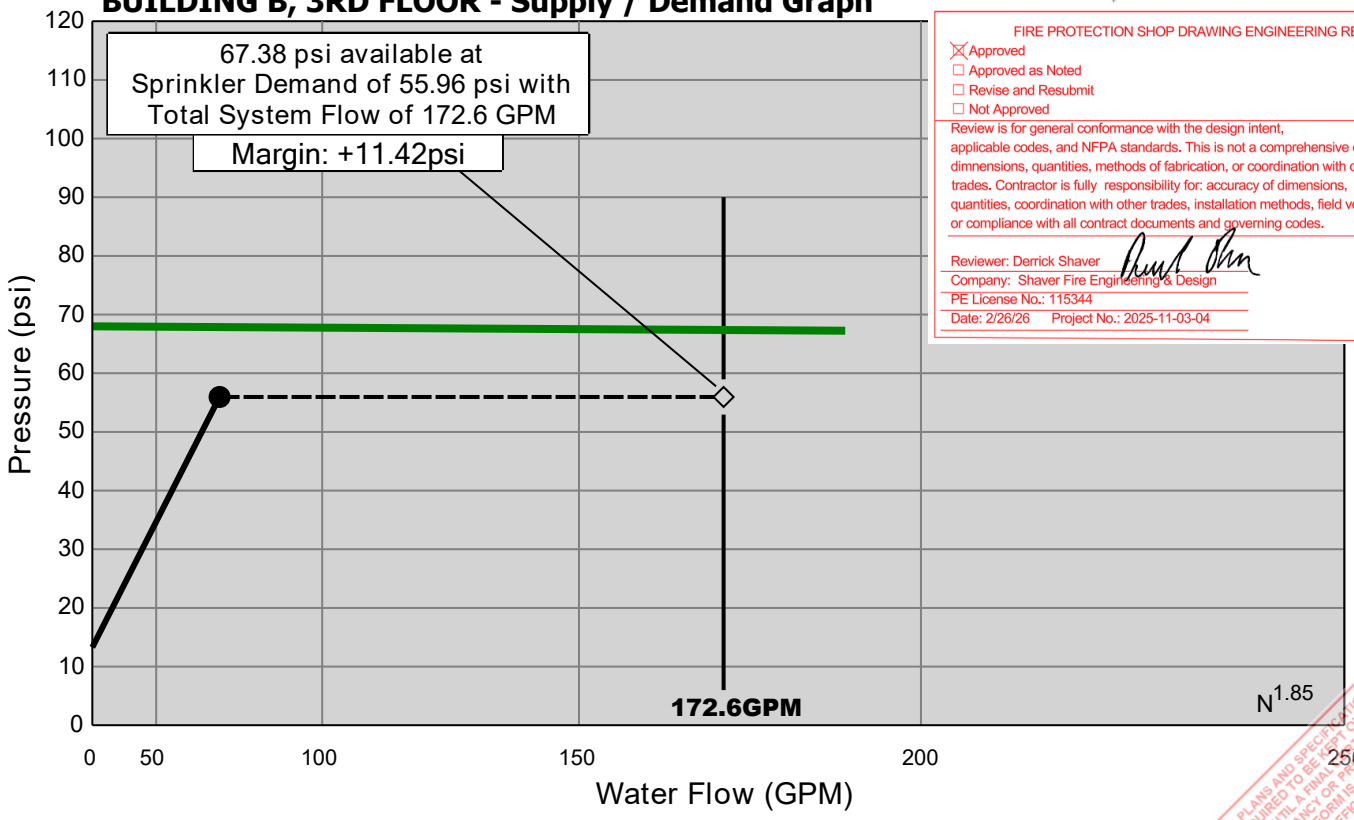

● Demand at sprinkler and interior hose flows ◇ Total System Demand including Hose Flows at Zero

© Copyright 2024 Sigma Development Group

FIELD SET TFM# 21689-A, 21689-B, 21689-C PROJECT# 2025-11-03-04

THESE PLANS AND SPECIFICATIONS ARE REQUIRED TO BE KEPT ON THE JOB SITE UNTIL A FINAL CERTIFICATE OF OCCUPANCY OR PROJECT COMPLETION FORM IS ISSUED BY THIS OFFICE.
No alterations, deletions, additions or modifications of any kind are allowed to this approved set without written permission of this office.
TENNESSEE STATE FIRE MARSHAL'S OFFICE

Node	Elev ft	Device	KFactor	Minimum Flow GPM	Node Pressure psi	Actual Discharge GPM	Notes
113	30.00	**Sprinkler**	4.90	17.00	15.30	19.17	
112	30.00	**Sprinkler**	4.90	17.00	15.18	19.09	
111	30.00	**Sprinkler**	4.90	17.00	12.04	17.00	
110	30.00	**Sprinkler**	4.90	17.00	12.58	17.38	
103	30.67				15.71	19.2	
102	30.67				15.82	19.1	
101	30.67				11.97	17.0	
100	30.67				12.83	34.4	
32	30.67				17.63	19.2	
31	30.67				17.73	38.3	
30	30.67				17.80	34.4	
25	30.67				17.94	72.6	
24	30.67				20.91	72.6	
23	20.17				26.73	72.6	
22	9.67				33.24	72.6	
20	9.67				35.51	72.6	
14	9.67				43.27	72.6	
12	3.33				47.42	72.6	
9	1.00				55.45	72.6	
8	0.00				55.88	72.6	Finished Floor Node
7	0.00				55.89	72.6	
4	0.00				55.93	72.6	
2	0.00				55.95	72.6	
1	0.00				55.95	72.6	
0	0.00	**Hose@Zero**			55.96	100.0	

FIELD SET TFM# 21689-A, 21689-B, 21689-C PROJECT# 2025-11-03-04

THESE PLANS AND SPECIFICATIONS MUST BE KEPT ON THE JOB SITE UNTIL A FINAL CERTIFICATE OF OCCUPANCY OR PROJECT COMPLETION FORM IS ISSUED BY THIS OFFICE.
No alterations, deletions, additions or modifications of any kind are allowed to this approved set without written permission of this office.
TENNESSEE STATE FIRE MARSHAL'S OFFICE

© Copyright 2024 Sigma Development Group

BUILDING B, 3RD FLOOR

TRI-STATE SPRINKLER CORP.
RESERVES AT COBALT
BUILDING B (PROJECT# 2025-11-03-04)

NotesThere are 0 sprinklers in this remote area.

FIELD SET TFM# 21689-A, 21689-B, 21689-C PROJECT# 2025-11-03-04

THESE PLANS AND SPECIFICATIONS ARE REQUIRED TO BE KEPT ON THE JOB SITE UNTIL A FINAL CERTIFICATE OF OCCUPANCY OR PROJECT COMPLETION FORM IS ISSUED BY THIS OFFICE.
No alterations, deletions, additions or revisions of any kind are allowed to this approved set without written permission from this office.
TENNESSEE STATE FIRE MARSHAL'S OFFICE

© Copyright 2024 Sigma Development Group

Dashboard Hydraulics

Pipe Information

From / To	Elev1 ft / Elev2 ft	$Q=k\sqrt{p}$	Pipe ID / Type	Flows Added GPM / Total	Inside Diameter in	Fittings	Length ft / Fitting ft / Total ft	C Value / Friction Loss psi/ft	Total (Pt) psi / Elev (Pe) psi / Frict (Pf) psi	Notes
101	30.67	4.9	1" CPVC		1.1010	E	Len 0.7	C = 150	Pt 111) 12.036	
111	30.00		DR	17.0			Ftg 3.8		Pe -0.289	
							Total 4.5	0.05037	Pf 0.226	
100	30.67	4.7	1" CPVC		1.1010	0	Len 17.0	C = 150	Pt 101) 11.973	
101	30.67		BN	17.0			Ftg 0.0		Pe 0.000	
							Total 17.0	0.05037	Pf 0.856	
Total Pressure at Node 100) 12.830 psi										
103	30.67	4.8	1" CPVC		1.1010	T	Len 1.5	C = 150	Pt 113) 15.301	
113	30.00		DR	19.2			Ftg 9.6		Pe -0.289	
							Total 11.1	0.06289	Pf 0.695	
32	30.67	4.6	1" CPVC		1.1010	T	Len 21.0	C = 150	Pt 103) 15.707	
103	30.67		BN	19.2			Ftg 9.6		Pe 0.000	
							Total 30.6	0.06289	Pf 1.922	
Total Pressure at Node 32) 17.629 psi										
102	30.67	4.8	1" CPVC		1.1010	T,E	Len 1.5	C = 150	Pt 112) 15.183	
112	30.00		DR	19.1			Ftg 13.4		Pe -0.289	
							Total 14.9	0.06244	Pf 0.929	
31	30.67	4.5	1" CPVC		1.1010	T	Len 21.0	C = 150	Pt 102) 15.823	
102	30.67		BN	19.1			Ftg 9.6		Pe 0.000	
							Total 30.6	0.06244	Pf 1.908	
Total Pressure at Node 31) 17.731 psi										
100	30.67	4.9	1" CPVC		1.1010	T	Len 0.7	C = 150	Pt 110) 12.582	
110	30.00		DR	17.4			Ftg 9.6		Pe -0.289	
							Total 10.2	0.05248	Pf 0.537	
30	30.67	8.1	1" CPVC	17.0	1.1010	T	Len 17.3	C = 150	Pt 100) 12.830	
100	30.67		BN	34.4			Ftg 9.6		Pe 0.000	
							Total 26.8	0.18538	Pf 4.969	
Total Pressure at Node 30) 17.799 psi										
31	30.67	4.6	1½" CPVC		1.5980	0	Len 10.0	C = 150	Pt 32) 17.629	
32	30.67		FM	19.2			Ftg 0.0		Pe 0.000	
							Total 10.0	0.01025	Pf 0.102	
25	30.67	9.0	1½" CPVC	19.1	1.5980	0	Len 5.7	C = 150	Pt 31) 17.731	
31	30.67		FM	38.3			Ftg 0.0		Pe 0.000	
							Total 5.7	0.03682	Pf 0.209	
Total Pressure at Node 25) 17.940 psi										

FIELD SET TFM# 21689-A, 21689-B, 21689-C PROJECT# 2025-11-03-04

THESE PLANS AND SPECIFICATIONS ARE REQUIRED TO BE KEPT ON THE JOB SITE UNTIL A FINAL CERTIFICATE OF OCCUPANCY OR PROJECT COMPLETION FORM IS ISSUED BY THIS OFFICE.
No alterations, deletions, additions or modifications of these plans are allowed to this approved set without written permission of this office.
TENNESSEE STATE FIRE MARSHAL'S OFFICE

© Copyright 2024 Sigma Development Group

From / To	Elev1 ft / Elev2 ft	$Q=k\sqrt{p}$	Pipe ID / Type	Flows Added GPM / Total	Inside Diameter in	Fittings	Length ft / Fitting ft / Total ft	C Value / Friction Loss psi/ft	Total (Pt) psi / Elev (Pe) psi / Frict (Pf) psi	Notes
25	30.67	8.1	1½" CPVC		1.5980	0	Len 4.7 Ftg 0.0	C = 150	Pt 30) 17.799 Pe 0.000	
30	30.67		FM	34.4			Total 4.7	0.03021	Pf 0.141	
24	30.67	15.9	1½" CPVC	38.3	1.5980	E/T	Len 7.2 Ftg 17.5	C = 150	Pt 25) 17.940 Pe 0.000	
25	30.67		FM	72.6			Total 24.6	0.12054	Pf 2.970	
23	20.17	14.1	1½" CPVC		1.5980	0	Len 10.5 Ftg 0.0	C = 150	Pt 24) 20.910 Pe 4.550	
24	30.67		FM	72.6			Total 10.5	0.12054	Pf 1.266	
22	9.67	12.6	1½" CPVC		1.5980	E	Len 10.5 Ftg 5.8	C = 150	Pt 23) 26.725 Pe 4.550	
23	20.17		FM	72.6			Total 16.3	0.12054	Pf 1.968	
20	9.67	12.2	1½" CPVC		1.5980	T	Len 7.2 Ftg 11.6	C = 150	Pt 22) 33.243 Pe 0.000	
22	9.67		FM	72.6			Total 18.8	0.12054	Pf 2.268	
14	9.67	11.0	2" CPVC		2.0030	6E/4E	Len 128.5 Ftg 64.8	C = 150	Pt 20) 35.511 Pe 0.000	
20	9.67		FM	72.6			Total 193.3	0.04012	Pf 7.755	
12	3.33	10.5	2" Sch 10		2.1570	BV,CV/E	Len 6.3 Ftg 27.1	C = 120	Pt 14) 43.265 Pe 2.744	
14	9.67		FR	72.6			Total 33.4	0.04227	Pf 1.412	
9	1.00	9.8	2" Sch 10		2.1570	CDDC	Len 2.3 Ftg 0.0	C = 120	Pt 12) 47.422 Pe 1.011	2" Watts Double Check Assembly 757: Loss = 6.92
12	3.33		FR	72.6			Total 2.3	0.04227	Pf 0.099	
8	0.00	9.7	6" DI		5.8903	0	Len 1.0 Ftg 0.0	C = 140	Pt 9) 55.451 Pe 0.433	
9	1.00		FR	72.6			Total 1.0	0.00024	Pf 0.000	
7	0.00	9.7	6" DI		5.8903	E	Len 6.0 Ftg 16.1	C = 140	Pt 8) 55.884 Pe 0.000	Finished Floor Node (8)
8	0.00		FR	72.6			Total 22.1	0.00024	Pf 0.005	
4	0.00	9.7	6" PVC CL150		6.0900	T, GV/EE,E	Len 164.2 Ftg 83.2	C = 150	Pt 7) 55.890 Pe 0.000	
7	0.00		FR	72.6			Total 247.4	0.00018	Pf 0.044	
2	0.00	9.7	8" PVC CL150		7.9800	2EE	Len 215.9 Ftg 27.2	C = 150	Pt 4) 55.934 Pe 0.000	
4	0.00		UN	72.6			Total 243.1	0.00005	Pf 0.012	

FIELD SET TFM# 21689-A, 21689-B, 21689-C PROJECT# 2025-11-03-04

THESE PLANS AND SPECIFICATIONS ARE REQUIRED TO BE KEPT ON THE JOB SITE UNTIL A FINAL CERTIFICATE OF OCCUPANCY OR PROJECT COMPLETION FORM IS ISSUED BY THIS OFFICE.
No alterations or deletions or additions or modifications of any kind are allowed to this approved set of plans without written permission of this office.
TENNESSEE STATE FIRE MARSHAL'S OFFICE

© Copyright 2024 Sigma Development Group

Dashboard Hydraulics

Pipe Information

From / To	Elev1 ft / Elev2 ft	$Q=k\sqrt{p}$	Pipe ID / Type	Flows Added GPM / Total	Inside Diameter in	Fittings	Length ft / Fitting ft / Total ft	C Value / Friction Loss psi/ft	Total (Pt) psi / Elev (Pe) psi / Frict (Pf) psi	Notes
1	0.00	9.7	8" PVC CL150		7.9800	0	Len 175.6 Ftg 0.0	C = 150	Pt 2) 55.945 Pe 0.000	
2	0.00		UN	72.6			Total 175.6	0.00005	Pf 0.008	
0	0.00	9.7	6" PVC CL150		6.0900	T,GV	Len 7.9 Ftg 50.8	C = 150	Pt 1) 55.954 Pe 0.000	100 GPM HOSE ALLOWANCE
1	0.00		UN	72.6			Total 58.8	0.00018	Pf 0.010	

Total Pressure at Node 0) 55.964 psi

FIELD SET TFM# 21689-A, 21689-B, 21689-C PROJECT# 2025-11-03-04

THESE PLANS AND SPECIFICATIONS ARE REQUIRED TO BE KEPT ON THE JOB SITE UNTIL A FINAL CERTIFICATE OF OCCUPANCY OR PROJECT COMPLETION FORM IS ISSUED BY THIS OFFICE.
No alterations, deletions, additions or modifications of these plans are allowed to this approved set without written permission of this office.
TENNESSEE STATE FIRE MARSHAL'S OFFICE

© Copyright 2024 Sigma Development Group

Component Legend

CPVC

1" CPVC		Inside Dia: 1.1010 in		CValue: 150		80.6'
	E *Elbow*	*2.0 ft*	*corrected to*	*3.8 ft*		2 ea
	T *Tee*	*5.0 ft*	*corrected to*	*9.6 ft*		6 ea
1½" CPVC		Inside Dia: 1.5980 in		CValue: 150		55.7'
	E *Elbow*	*4.0 ft*	*corrected to*	*5.8 ft*		2 ea
	T *Tee*	*8.0 ft*	*corrected to*	*11.6 ft*		2 ea
2" CPVC		Inside Dia: 2.0030 in		CValue: 150		128.5'
	E *Elbow*	*5.0 ft*	*corrected to*	*6.5 ft*		7 ea

Ductile Iron Underground

6" DI		Inside Dia: 5.8903 in		CValue: 140		7.0'
	E *Elbow*	*14.0 ft*	*corrected to*	*16.1 ft*		1 ea

PVC U.G. C900 CL150

6" PVC CL150		Inside Dia: 6.0900 in		CValue: 150		172.1'
	EE *45° Elbow*	*7.0 ft*	*corrected to*	*10.8 ft*		1 ea
	E *Elbow*	*14.0 ft*	*corrected to*	*21.6 ft*		1 ea
	T *Tee*	*30.0 ft*	*corrected to*	*46.2 ft*		2 ea
	GV *Gate Valve*	*3.0 ft*	*corrected to*	*4.6 ft*		2 ea
8" PVC CL150		Inside Dia: 7.9800 in		CValue: 150		391.5'
	EE *45° Elbow*	*9.0 ft*	*corrected to*	*13.6 ft*		2 ea

Schedule 10

2" Sch 10		Inside Dia: 2.1570 in		CValue: 120		8.7'
	E *Elbow*	*5.0 ft*	*corrected to*	*6.2 ft*		1 ea
	BV *Butterfly Valve*	*6.0 ft*	*corrected to*	*7.4 ft*		1 ea
	CV *Check Valve*	*11.0 ft*	*corrected to*	*13.5 ft*		1 ea

2" Watts Double Check Assembly

CDDC

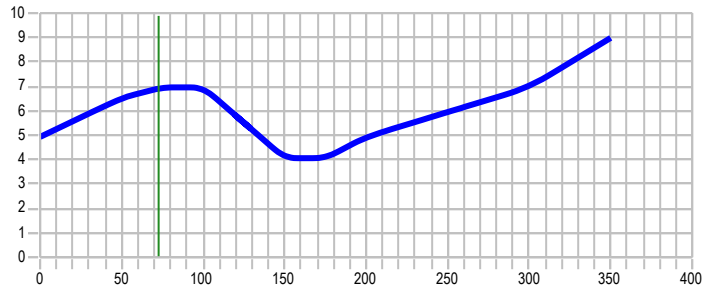

757

Nominal Diameter: 2 in

Located on Pipe: 9-12

Flow Through Device: 72.6 GPM

Calculated Loss: 6.92 psi

FIELD SET TFM# 21689-A, 21689-B, 21689-C PROJECT# 2025-11-03-04

THESE PLANS AND SPECIFICATIONS ARE REQUIRED TO BE KEPT ON THE JOB SITE UNTIL A FINAL CERTIFICATE OF OCCUPANCY OR PROJECT COMPLETION FORM IS ISSUED BY THIS OFFICE.
No alterations, additions or modifications of these plans are allowed to this approved set without written permission of this office.
TENNESSEE STATE FIRE MARSHAL'S OFFICE

© Copyright 2024 Sigma Development Group

Hydraulics Summary Sheet

Dashboard Hydraulics

Project Information

RESERVES AT COBALT
BUILDING C (PROJECT# 2025-11-03-04)
1616 E. JEFFERSON STREET
TFN# 21689-C
BROWNSVILLE, TN. 38012

contract # 12056

Calculation Date: 2/26/2026 2:16 PM

system ID 1 **drawing ref** 7

building APT
construction WOOD
occupancy LIGHT HAZARD
authority

Contractor Information

TRI-STATE SPRINKLER CORP.
3085 FOUNTAINSIDE DR.
SUITE 110
GERMANTOWN, TN. 38138

calculated by SFPC
telephone 901-365-9616
fax 901-365-7319
email

Hydraulics Criteria

density	.05 GPM/ft²
remote area	4HEADS ft²
spr coverage	324 ft²
sprs flowing	4

system type WET
design std NFPA13R
hazard LIGHT HAZARD
figure
curve

Sprinklers in Remote

No.	Mfgr	Mod	SIN#	Size	K
4	RELIABLE	F1RES49	R3516	1/2"	4.90

Flow Test

static pressure	68.00	psi
residual pressure	52.00	psi
quantity flowing	1,000.0	GPM

date & time of flow test

location of flow test
EAST JEFFERSON STREET

TFM #21689-A
Project
#2025-11-03-04
RME #002

Supply / Demand Graph

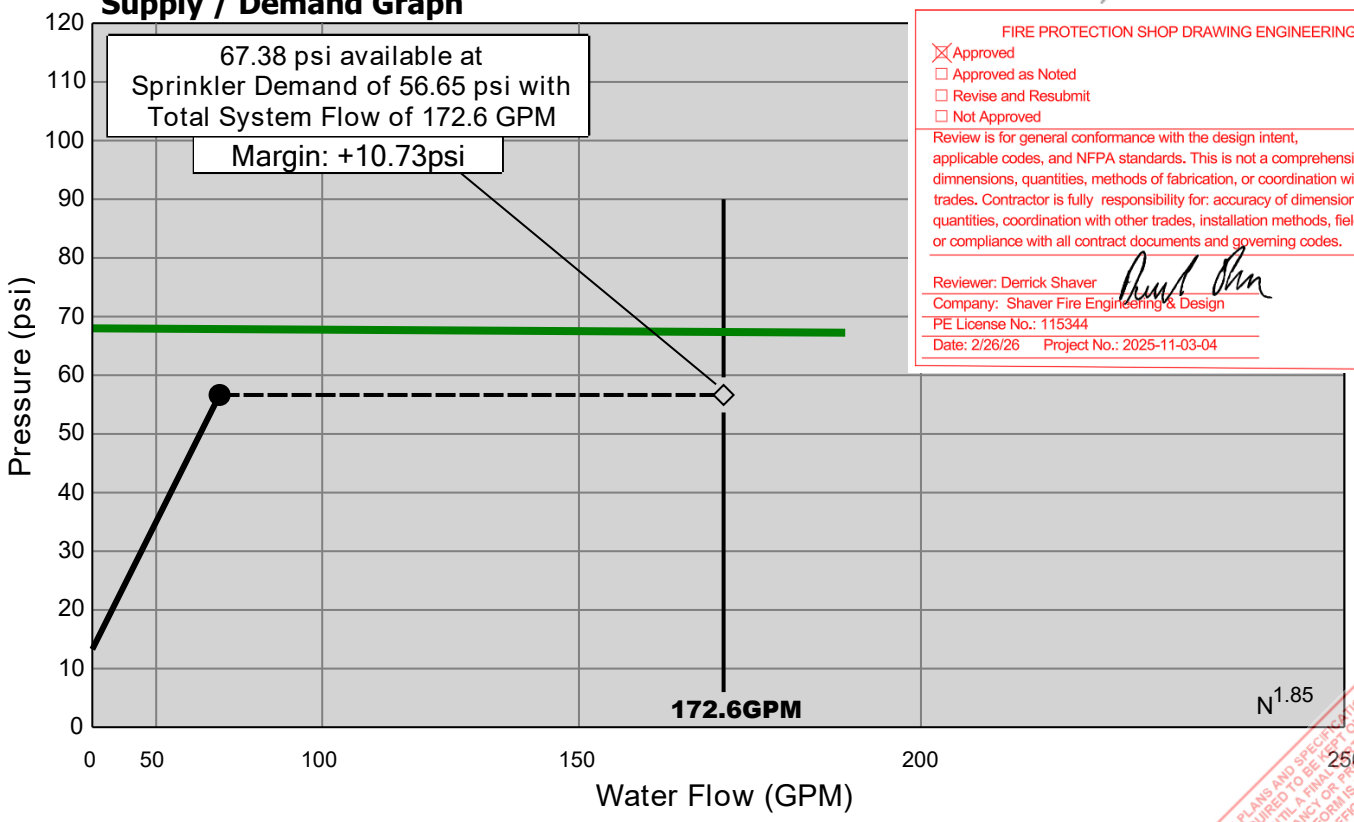

● Demand at sprinkler and interior hose flows ◇ Total System Demand including Hose Flows at Zero

FIRE PROTECTION SHOP DRAWING ENGINEERING REVIEW
☒ Approved
☐ Approved as Noted
☐ Revise and Resubmit
☐ Not Approved
Review is for general conformance with the design intent, applicable codes, and NFPA standards. This is not a comprehensive check of dimnensions, quantities, methods of fabrication, or coordination with other trades. Contractor is fully responsibility for: accuracy of dimensions, quantities, coordination with other trades, installation methods, field verification, or compliance with all contract documents and governing codes.
Reviewer: Derrick Shaver
Company: Shaver Fire Engineering & Design
PE License No.: 115344
Date: 2/26/26 Project No.: 2025-11-03-04

FIELD SET TFM# 21689-A, 21689-B, 21689-C PROJECT# 2025-11-03-04

© Copyright 2024 Sigma Development Group

Node	Elev ft	Device	KFactor	Minimum Flow GPM	Node Pressure psi	Actual Discharge GPM	Notes
113	30.00	**Sprinkler**	4.90	17.00	15.30	19.17	
112	30.00	**Sprinkler**	4.90	17.00	15.18	19.09	
111	30.00	**Sprinkler**	4.90	17.00	12.04	17.00	
110	30.00	**Sprinkler**	4.90	17.00	12.58	17.38	
103	30.67				15.71	19.2	
102	30.67				15.82	19.1	
101	30.67				11.97	17.0	
100	30.67				12.83	34.4	
32	30.67				17.63	19.2	
31	30.67				17.73	38.3	
30	30.67				17.80	34.4	
25	30.67				17.94	72.6	
24	30.67				20.91	72.6	
23	20.17				26.73	72.6	
22	9.67				33.24	72.6	
20	9.67				35.51	72.6	
14	9.67				43.95	72.6	
12	3.33				48.10	72.6	
9	1.00				56.13	72.6	
8	0.00				56.57	72.6	Finished Floor Node
7	0.00				56.57	72.6	
5	0.00				56.62	72.6	
4	0.00				56.62	72.6	
2	0.00				56.63	72.6	
1	0.00				56.64	72.6	
0	0.00	**Hose@Zero**			56.65	100.0	

FIELD SET TFM# 21689-A, 21689-B, 21689-C PROJECT# 2025-11-03-04

THESE PLANS AND SPECIFICATIONS MUST BE KEPT ON THE JOB SITE UNTIL A FINAL CERTIFICATE OF OCCUPANCY OR PROJECT COMPLETION FORM IS ISSUED BY THIS OFFICE.
No alterations, deletions, additions or modifications of any kind are allowed to this approved set without written permission of this office.
TENNESSEE STATE FIRE MARSHAL'S OFFICE

© Copyright 2024 Sigma Development Group

From / To	Elev1 ft / Elev2 ft	$Q=k\sqrt{p}$	Pipe ID / Type	Flows Added GPM / Total	Inside Diameter in	Fittings	Length ft / Fitting ft / Total ft	C Value / Friction Loss psi/ft	Total (Pt) psi / Elev (Pe) psi / Frict (Pf) psi	Notes
101	30.67	4.9	1" CPVC		1.1010	E	Len 0.7	C = 150	Pt 111) 12.036	
111	30.00		DR	17.0			Ftg 3.8		Pe -0.289	
							Total 4.5	0.05037	Pf 0.226	
100	30.67	4.7	1" CPVC		1.1010	0	Len 17.0	C = 150	Pt 101) 11.973	
101	30.67		BN	17.0			Ftg 0.0		Pe 0.000	
							Total 17.0	0.05037	Pf 0.856	
Total Pressure at Node 100) 12.830 psi										
103	30.67	4.8	1" CPVC		1.1010	T	Len 1.5	C = 150	Pt 113) 15.301	
113	30.00		DR	19.2			Ftg 9.6		Pe -0.289	
							Total 11.1	0.06289	Pf 0.695	
32	30.67	4.6	1" CPVC		1.1010	T	Len 21.0	C = 150	Pt 103) 15.707	
103	30.67		BN	19.2			Ftg 9.6		Pe 0.000	
							Total 30.6	0.06289	Pf 1.922	
Total Pressure at Node 32) 17.629 psi										
102	30.67	4.8	1" CPVC		1.1010	T,E	Len 1.5	C = 150	Pt 112) 15.183	
112	30.00		DR	19.1			Ftg 13.4		Pe -0.289	
							Total 14.9	0.06244	Pf 0.929	
31	30.67	4.5	1" CPVC		1.1010	T	Len 21.0	C = 150	Pt 102) 15.823	
102	30.67		BN	19.1			Ftg 9.6		Pe 0.000	
							Total 30.6	0.06244	Pf 1.908	
Total Pressure at Node 31) 17.731 psi										
100	30.67	4.9	1" CPVC		1.1010	T	Len 0.7	C = 150	Pt 110) 12.582	
110	30.00		DR	17.4			Ftg 9.6		Pe -0.289	
							Total 10.2	0.05248	Pf 0.537	
30	30.67	8.1	1" CPVC	17.0	1.1010	T	Len 17.3	C = 150	Pt 100) 12.830	
100	30.67		BN	34.4			Ftg 9.6		Pe 0.000	
							Total 26.8	0.18538	Pf 4.969	
Total Pressure at Node 30) 17.799 psi										
31	30.67	4.6	1½" CPVC		1.5980	0	Len 10.0	C = 150	Pt 32) 17.629	
32	30.67		FM	19.2			Ftg 0.0		Pe 0.000	
							Total 10.0	0.01025	Pf 0.102	
25	30.67	9.0	1½" CPVC	19.1	1.5980	0	Len 5.7	C = 150	Pt 31) 17.731	
31	30.67		FM	38.3			Ftg 0.0		Pe 0.000	
							Total 5.7	0.03682	Pf 0.209	
Total Pressure at Node 25) 17.940 psi										

FIELD SET TFM# 21689-A, 21689-B, 21689-C PROJECT# 2025-11-03-04

THESE PLANS AND SPECIFICATIONS ARE REQUIRED TO BE KEPT ON THE JOB SITE UNTIL A FINAL CERTIFICATE OF OCCUPANCY OR PROJECT COMPLETION FORM IS ISSUED BY THIS OFFICE.
No alterations, deletions, additions or modifications of these plans are allowed to this approved set without written permission of this office.
TENNESSEE STATE FIRE MARSHAL'S OFFICE

© Copyright 2024 Sigma Development Group

From / To	Elev1 ft / Elev2 ft	$Q=k\sqrt{p}$	Pipe ID / Type	Flows Added GPM / Total	Inside Diameter in	Fittings	Length ft / Fitting ft / Total ft	C Value / Friction Loss psi/ft	Total (Pt) psi / Elev (Pe) psi / Frict (Pf) psi	Notes
25	30.67	8.1	1½" CPVC		1.5980	0	Len 4.7 Ftg 0.0	C = 150	Pt 30) 17.799 Pe 0.000	
30	30.67		FM	34.4			Total 4.7	0.03021	Pf 0.141	
24	30.67	15.9	1½" CPVC	38.3	1.5980	E/T	Len 7.2 Ftg 17.5	C = 150	Pt 25) 17.940 Pe 0.000	
25	30.67		FM	72.6			Total 24.6	0.12054	Pf 2.970	
23	20.17	14.1	1½" CPVC		1.5980	0	Len 10.5 Ftg 0.0	C = 150	Pt 24) 20.910 Pe 4.550	
24	30.67		FM	72.6			Total 10.5	0.12054	Pf 1.266	
22	9.67	12.6	1½" CPVC		1.5980	E	Len 10.5 Ftg 5.8	C = 150	Pt 23) 26.725 Pe 4.550	
23	20.17		FM	72.6			Total 16.3	0.12054	Pf 1.968	
20	9.67	12.2	1½" CPVC		1.5980	T	Len 7.2 Ftg 11.6	C = 150	Pt 22) 33.243 Pe 0.000	
22	9.67		FM	72.6			Total 18.8	0.12054	Pf 2.268	
14	9.67	11.0	2" CPVC		2.0030	6E/4E	Len 145.5 Ftg 64.8	C = 150	Pt 20) 35.511 Pe 0.000	
20	9.67		FM	72.6			Total 210.3	0.04012	Pf 8.437	
12	3.33	10.5	2" Sch 10		2.1570	BV,CV/E	Len 6.3 Ftg 27.1	C = 120	Pt 14) 43.947 Pe 2.744	
14	9.67		FR	72.6			Total 33.4	0.04227	Pf 1.412	
9	1.00	9.7	2" Sch 10		2.1570	CDDC	Len 2.3 Ftg 0.0	C = 120	Pt 12) 48.104 Pe 1.011	2" Watts Double Check Assembly 757: Loss = 6.92
12	3.33		FR	72.6			Total 2.3	0.04227	Pf 0.099	
8	0.00	9.7	6" DI		5.8903	0	Len 1.0 Ftg 0.0	C = 140	Pt 9) 56.133 Pe 0.433	
9	1.00		FR	72.6			Total 1.0	0.00024	Pf 0.000	
7	0.00	9.7	6" DI		5.8903	E	Len 6.0 Ftg 16.1	C = 140	Pt 8) 56.566 Pe 0.000	Finished Floor Node (8)
8	0.00		FR	72.6			Total 22.1	0.00024	Pf 0.005	
5	0.00	9.7	6" PVC CL150		6.0900	T,GV, 2E/EE,E	Len 126.3 Ftg 126.3	C = 150	Pt 7) 56.572 Pe 0.000	
7	0.00		FR	72.6			Total 252.7	0.00018	Pf 0.045	
4	0.00	9.7	8" PVC CL150		7.9800	2EE	Len 99.8 Ftg 27.2	C = 150	Pt 5) 56.617 Pe 0.000	
5	0.00		UN	72.6			Total 126.9	0.00005	Pf 0.006	

FIELD SET TFM# 21689-A, 21689-B, 21689-C PROJECT# 2025-11-03-04

THESE PLANS AND SPECIFICATIONS ARE REQUIRED TO BE KEPT ON THE JOB SITE UNTIL A FINAL CERTIFICATE OF OCCUPANCY OR PROJECT COMPLETION FORM IS ISSUED BY THIS OFFICE.
No alterations or deletions or additions or modifications of any kind are allowed to this approved set without written permission of this office.
TENNESSEE STATE FIRE MARSHAL'S OFFICE

© Copyright 2024 Sigma Development Group

From / To	Elev1 ft / Elev2 ft	$Q=k\sqrt{p}$	Pipe ID / Type	Flows Added GPM / Total	Inside Diameter in	Fittings	Length ft / Fitting ft / Total ft	C Value / Friction Loss psi/ft	Total (Pt) psi / Elev (Pe) psi / Frict (Pf) psi	Notes
2	0.00	9.7	8" PVC CL150		7.9800	2EE	Len 215.9 Ftg 27.2	C = 150	Pt 4) 56.623	
4	0.00		UN	72.6			Total 243.1	0.00005	Pe 0.000 Pf 0.012	
1	0.00	9.7	8" PVC CL150		7.9800	0	Len 175.6 Ftg 0.0	C = 150	Pt 2) 56.634	
2	0.00		UN	72.6			Total 175.6	0.00005	Pe 0.000 Pf 0.008	
0	0.00	9.7	6" PVC CL150		6.0900	T,GV	Len 7.9 Ftg 50.8	C = 150	Pt 1) 56.643	100 GPM HOSE ALLOWANCE
1	0.00		UN	72.6			Total 58.8	0.00018	Pe 0.000 Pf 0.010	

Total Pressure at Node 0) 56.653 psi

FIELD SET TFM# 21689-A, 21689-B, 21689-C PROJECT# 2025-11-03-04

THESE PLANS AND SPECIFICATIONS ARE REQUIRED TO BE KEPT ON THE JOB SITE UNTIL A FINAL CERTIFICATE OF OCCUPANCY OR PROJECT COMPLETION FORM IS ISSUED BY THIS OFFICE.
No alterations, additions or modifications of these plans are allowed to this approved set without written permission of this office.
TENNESSEE STATE FIRE MARSHAL'S OFFICE

© Copyright 2024 Sigma Development Group

CPVC

1" CPVC		Inside Dia: 1.1010 in		CValue: 150		80.6'
	E *Elbow*	*2.0 ft*	*corrected to*	*3.8 ft*		2 ea
	T *Tee*	*5.0 ft*	*corrected to*	*9.6 ft*		6 ea
1½" CPVC		Inside Dia: 1.5980 in		CValue: 150		55.7'
	E *Elbow*	*4.0 ft*	*corrected to*	*5.8 ft*		2 ea
	T *Tee*	*8.0 ft*	*corrected to*	*11.6 ft*		2 ea
2" CPVC		Inside Dia: 2.0030 in		CValue: 150		145.5'
	E *Elbow*	*5.0 ft*	*corrected to*	*6.5 ft*		7 ea

Ductile Iron Underground

6" DI		Inside Dia: 5.8903 in		CValue: 140		7.0'
	E *Elbow*	*14.0 ft*	*corrected to*	*16.1 ft*		1 ea

PVC U.G. C900 CL150

6" PVC CL150		Inside Dia: 6.0900 in		CValue: 150		134.3'
	EE *45° Elbow*	*7.0 ft*	*corrected to*	*10.8 ft*		1 ea
	E *Elbow*	*14.0 ft*	*corrected to*	*21.6 ft*		3 ea
	T *Tee*	*30.0 ft*	*corrected to*	*46.2 ft*		2 ea
	GV *Gate Valve*	*3.0 ft*	*corrected to*	*4.6 ft*		2 ea
8" PVC CL150		Inside Dia: 7.9800 in		CValue: 150		491.3'
	EE *45° Elbow*	*9.0 ft*	*corrected to*	*13.6 ft*		4 ea

Schedule 10

2" Sch 10		Inside Dia: 2.1570 in		CValue: 120		8.7'
	E *Elbow*	*5.0 ft*	*corrected to*	*6.2 ft*		1 ea
	BV *Butterfly Valve*	*6.0 ft*	*corrected to*	*7.4 ft*		1 ea
	CV *Check Valve*	*11.0 ft*	*corrected to*	*13.5 ft*		1 ea

2" Watts Double Check Assembly

CDDC

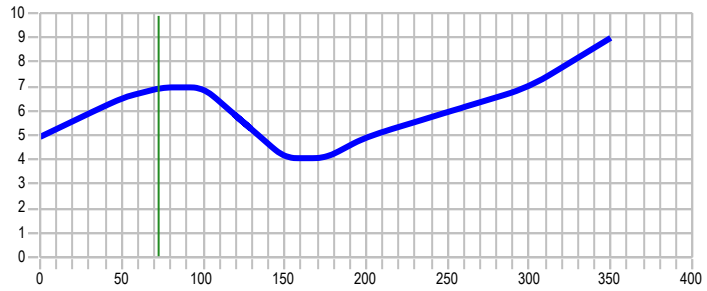

757

Nominal Diameter: 2 in

Located on Pipe: 9-12

Flow Through Device: 72.6 GPM

Calculated Loss: 6.92 psi

FIELD SET TFM# 21689-A, 21689-B, 21689-C PROJECT# 2025-11-03-04

THESE PLANS AND SPECIFICATIONS ARE REQUIRED TO BE KEPT ON THE JOB SITE UNTIL A FINAL CERTIFICATE OF OCCUPANCY OR PROJECT COMPLETION FORM IS ISSUED BY THIS OFFICE.
No alterations, deletions, additions or modifications of these plans are allowed to this approved set without written permission of this office.
TENNESSEE STATE FIRE MARSHAL'S OFFICE

© Copyright 2024 Sigma Development Group



TFM #21689-A
TFM #21689-B
TFM #21689-C
Project
#2025-11-03-04
RME #002

FIRE PROTECTION SHOP DRAWING ENGINEERING REVIEW

☒ Approved
☐ Approved as Noted
☐ Revise and Resubmit
☐ Not Approved

Review is for general conformance with the design intent, applicable codes, and NFPA standards. This is not a comprehensive check of dimnensions, quantities, methods of fabrication, or coordination with other trades. Contractor is fully responsibility for: accuracy of dimensions, quantities, coordination with other trades, installation methods, field verification, or compliance with all contract documents and governing codes.

Reviewer: Derrick Shaver
Company: Shaver Fire Engineering & Design
PE License No.: 115344
Date: 2/26/26 Project No.: 2025-11-03-04

The Reserves at Cobalt Circle

Fire Protection Material & Equipment Brochure

FIELD SET TFM# 21689-A, 21689-B, 21689-C PROJECT# 2025-11-03-04

THESE PLANS AND SPECIFICATIONS ARE REQUIRED TO BE KEPT ON THE JOB SITE UNTIL A FINAL CERTIFICATE OF OCCUPANCY OR PROJECT COMPLETION FORM IS ISSUED BY THIS OFFICE.
No alterations, deletions, additions or modifications of any kind are allowed to this approved set without written permission of this office.
TENNESSEE STATE FIRE MARSHAL'S OFFICE

Table of Contents

1. Dry Valve
2. Hanger Material
3. Seismic Bracing
4. Grooved & Threaded Fittings
5. Steel Piping, CPVC Piping & CPVC Fittings
6. Electric Switches
7. Dry Pendent Sprinkler Heads
8. Sprinkler Heads
9. Miscellaneous
10. Backflow Preventer
11. Underground Material

FIELD SET TFM# 21689-A, 21689-B, 21689-C PROJECT# 2025-11-03-04

THESE PLANS AND SPECIFICATIONS ARE REQUIRED TO BE KEPT ON THE JOB SITE UNTIL A FINAL CERTIFICATE OF OCCUPANCY OR PROJECT COMPLETION FORM IS ISSUED BY THIS OFFICE.
No alterations, deletions, additions or modifications of any kind are allowed to this approved set without written permission of this office.
TENNESSEE STATE FIRE MARSHAL'S OFFICE

Dry Valve

FIELD SET TFM# 21689-A, 21689-B, 21689-C PROJECT# 2025-11-03-04

THESE PLANS AND SPECIFICATIONS ARE REQUIRED TO BE KEPT ON THE JOB SITE UNTIL A FINAL CERTIFICATE OF OCCUPANCY OR PROJECT COMPLETION FORM IS ISSUED BY THIS OFFICE.
No alterations, deletions, additions or modifications of any kind are allowed to this approved set without written permission of this office.
TENNESSEE STATE FIRE MARSHAL'S OFFICE

Reliable®

Model DDX-LP Low Pressure Dry Pipe Valve System

Features

- Low air or nitrogen pressure, 8 to 24 psi (0.6 to 1.7 bar)
- Lightweight ductile iron body with compact trim
- External reset reduces setup and commissioning time
- Does not require priming water
- Available fully assembled, with or without control valve

Product Description

The Reliable Model DDX-LP Dry Pipe Valve System is a hydraulically operated, mechanical latching clapper-type valve designed for use as a primary control valve in a dry pipe system. The pneumatic system pressure when using the Model DDX-LP valve can be set substantially less than conventional differential style dry valves. The following benefits are a direct result of lower pneumatic pressure:

- Smaller, less expensive pneumatic sources
- Improved water transit times following operation of valve, and in some cases, elimination of quick opening devices
- Low pressure makes the use of nitrogen more practical

In addition to these benefits, mechanical type dry pipe valves are less susceptible to accidental tripping than conventional differential dry pipe valves.

All sizes of the Model DDX-LP valve may be equipped with the Reliable Model B1 Accelerator (P/N 6501200019; ordered separately). The accelerator operates as an exhauster to hasten the operation of the dry pipe valve. Please refer to Reliable Technical Bulletin 323 for further information.

Where the use of a dry pipe system is intended to be temporary until a permanent preaction system is installed, the Model DDX-LP Low Pressure Dry Pipe Valve may be installed and later converted to a Model DDX Type D or Type F preaction system. Please reference Technical Service Bulletin 338C for details.

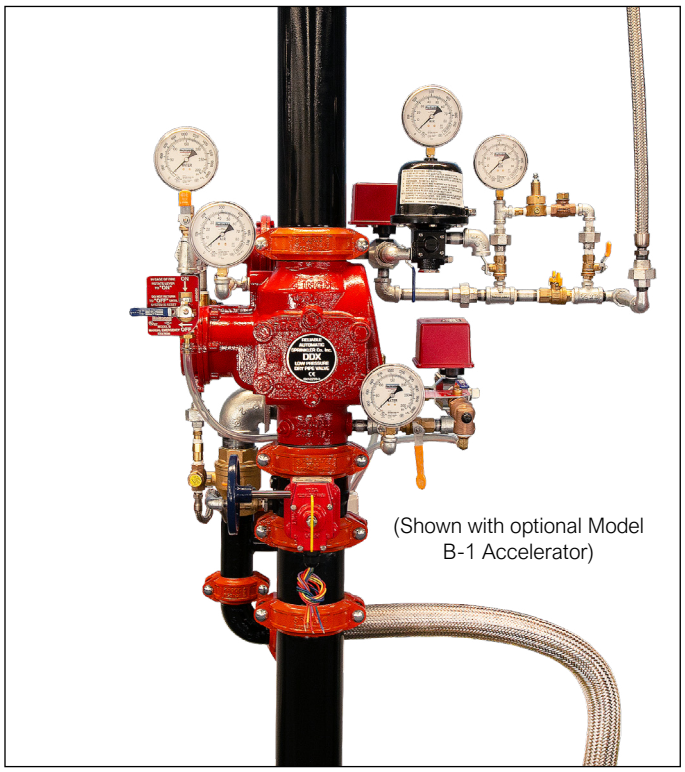

(Shown with optional Model B-1 Accelerator)

Product rendering includes devices and/or options that may not be included when ordered. Please confirm with your Reliable sales representative. Image subject to change.

Model DDX-LP Dry Pipe Valve System Listings and Approvals — **Table A**

Valve Size	End Connection*	Pressure Rating	Listings & Approvals
2” (50mm), 2-1/2” (65mm), & 3” (80mm)	Groove/Groove	250 psi (17,2 bar)	cULus, FM, CE, UKCA, LPCB
76mm	Groove/Groove	250 psi (17,2 bar)	cULus, FM, CE, UKCA, LPCB
4” (100mm)	Groove/Groove	300 psi (20,7 bar)	cULus, FM, CE, LPCB, UKCA
	Flange/Groove		
	Flange/Flange		
6” (150mm)	Groove/Groove	300 psi (20,7 bar)	cULus, FM, CE, LPCB, UKCA
	Flange/Groove		
	Flange/Flange		
165mm	Groove/Groove	300 psi (20,7 bar)	cULus, FM, CE, LPCB, UKCA
8” (200mm)	Groove/Groove	250 psi (17,2 bar)	cULus, FM, CE, UKCA
	Flange/Flange		

***Note:** Grooved ends per ANSI/AWWA C606; flanged ends per ASME B16.5 Class 150 or ISO 7005-2 PN16 (specify).

FIELD SET TFM# 21689-A, 21689-B, 21689-C PROJECT# 2025-11-03-04

THESE PLANS AND SPECIFICATIONS ARE REQUIRED TO BE KEPT ON THE JOB SITE UNTIL A FINAL CERTIFICATE OF OCCUPANCY OR PROJECT COMPLETION FORMS ISSUED BY THIS OFFICE.
No alterations, deletions, additions or modifications of any kind are allowed to this approved set without written permission of this office.
TENNESSEE STATE FIRE MARSHAL'S OFFICE

Operation

The Reliable Model DDX-LP Dry Pipe Valve System is shown in both the closed and open position in Figure 1. In the closed position, pneumatic pressure acts on the actuator preventing release of hydraulic pressure from the pushrod chamber. The supply water pressure acts simultaneously on the underside of the clapper and on the pushrod through the pushrod chamber restricted inlet. The resultant force on the pushrod is multiplied by the mechanical advantage of the lever and acts to hold the clapper closed against normal pressure surges in the water supply. When a sprinkler operates, the loss of pneumatic pressure in the sprinkler system causes the diaphragm and seal in the actuator to move away from the water seat allowing the release of water from the pushrod chamber. Since water cannot be replenished through the inlet restriction as rapidly as it is vented, the pushrod chamber pressure falls instantaneously. When the pushrod chamber pressure approaches approximately one-third of the supply pressure, the upward force of the water pressure acting beneath the clapper overcomes the force applied to the lever, opening the clapper. Water then flows through the Model DDX-LP Dry Pipe Valve into the system piping and into the alarm outlet activating the alarm device(s). Once the clapper has opened, the lever acts as a latch preventing the clapper from returning to the closed position.

Section View of Model DDX-LP Dry Valve with Clapper in Open, Closed, and Latched Positions **Figure 1**

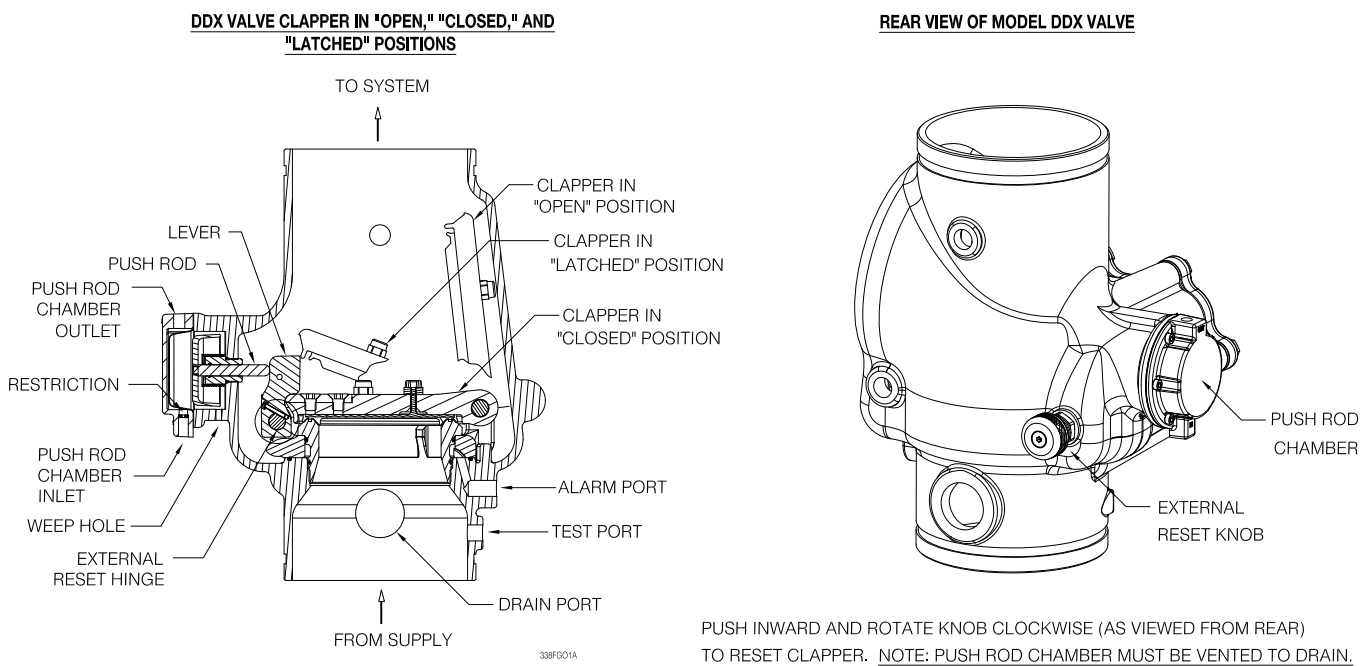

FIELD SET TFM# 21689-A, 21689-B, 21689-C PROJECT# 2025-11-03-04

THESE PLANS AND SPECIFICATIONS ARE REQUIRED TO BE KEPT ON THE JOB SITE UNTIL A FINAL CERTIFICATE OF OCCUPANCY OR PROJECT COMPLETION FORM IS ISSUED BY THIS OFFICE.
No alterations, deletions, additions or modifications of any kind are allowed to this approved set without written permission of this office.
TENNESSEE STATE FIRE MARSHAL'S OFFICE

DDX-LP Valve Dimensions **Figure 2**

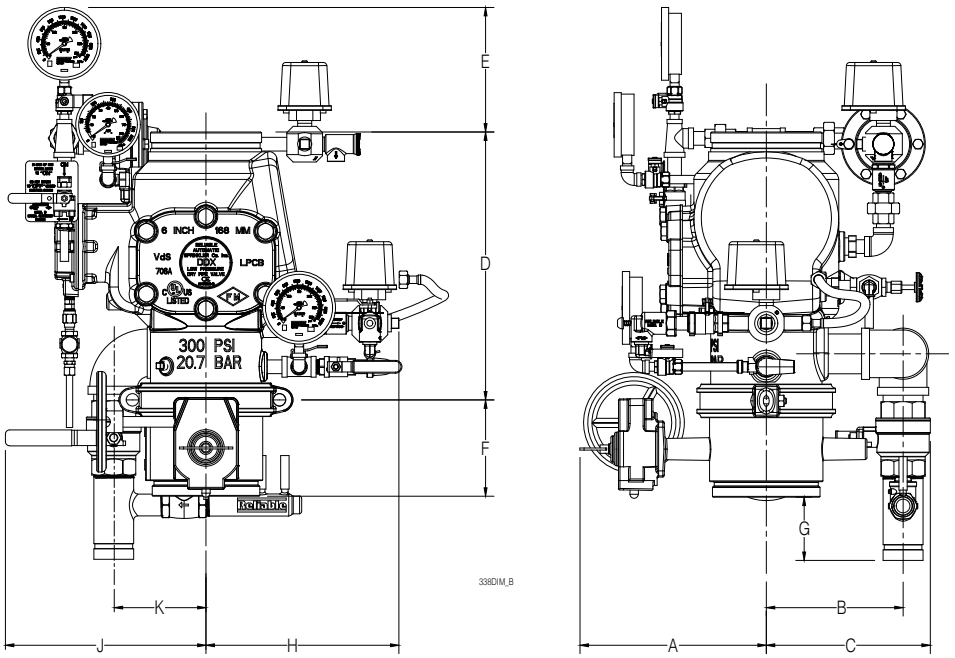

Installation Dimensions in Inches (mm) (Refer to Figure 2) **Table B**

Size	A	B	C	D(1)	D(2)	E	F(3)	G	H	J	K
2" (50 mm)	8-1/2 (216)	7-3/4 (197)	9-1/8 (232)	12-1/2 (318)	NA	8-3/8 (213)	3-7/8 (98)	1-1/2 (38)	10 (254)	9-1/2 (241)	4 (102)
2-1/2" (65 mm), 3" (80 mm) & 76 mm	8-1/2 (216)	7-3/4 (197)	9-1/8 (232)	12-1/2 (318)	NA	8-3/8 (213)	3-7/8 (98)	1-3/8 (35)	9-7/8 (251)	9-1/2 (241)	3-7/8 (98)
4" (100 mm)	9-3/4 (248)	7-5/8 (194)	9-1/4 (235)	14 (356)	16 (406)	7-1/4 (184)	4-9/16 (116)	5-1/4 (133)	11 (279)	11-7/8 (301)	5-1/2 (140)
6" (150 mm) & 165 mm	11-1/8 (283)	8-1/8 (206)	9-3/4 (206)	16 (406)	19 (483)	6-7/8 (175)	5-7/8 (149)	3-3/4 (95)	11 (279)	12 (305)	5-1/2 (140)
8" (200 mm)	12-5/8 (321)	9 (229)	10-5/8 (270)	19-3/8 (492)	21-1/4 (540)	9-7/8 (251)	5-1/4 (134)	4-1/8 (105)	12-5/8 (321)	12 (305)	5-1/2 (140)

Notes:
1. End to end take out of Model DDX valve with grooved inlet.
2. End to end take out of Model DDX valve with flanged inlet where available (see page 1, table A).
3. Not applicable to 76mm or 165mm systems, or systems using a flanged inlet Model DDX valve.

Valve Shipping Weight **Table C**

Valve Size	End Connection	Weight
2" (50mm), 2½" (65mm), 76mm & 3" (80mm)	Groove/ Groove	34 lbs (15 kg)
4" (100mm)	Groove/ Groove	64 lbs (29 kg
	Flange/ Groove	79 lbs (36 kg)
	Flange/ Flange	92 lbs (42 kg)
6" (150mm) & 165mm	Groove/ Groove	95 lbs (43 kg)
	Flange/ Groove	122 lbs (56 kg)
	Flange/ Flange	138 lbs (69 kg)
8" (200mm)	Groove/ Groove	148 lbs (67 kg)
	Flange/ Flange	197 lbs (90 kg)

Trim Shipping Weight **Table D**

Valve Size	Weight
2" (50mm), 2½" (65mm), 76mm & 3" (80mm)	30 lbs (13.6 kg)
4" (100mm), 6" (150mm), 165mm & 8" (200mm)	34 lbs (15.5 kg)

Friction Loss **Table E**

Valve Size	Equivalent Length		Cv
	C = 120	C = 100	
2" (50mm)	4.4 ft (1,3 m)	3.1 ft (1,0 m)	101
2½" (65mm)	6.0 ft (1,8 m)	4.3 ft (1,3 m)	236
76mm	7.7 ft (2,3 m)	5.5 ft (1,7 m)	241
3" (80mm)	12.6 ft (3,8 m)	9.0 ft (2,7 m)	254
4" (100mm)	14 ft (4,3 m)	10 ft (3,0 m)	469
165mm	29.4 ft (9,0 m)	20.9 ft (6,4 m)	886
6" (150mm)	29.4 ft (9,0 m)	20.9 ft (6,4 m)	886
8" (200mm)	53.5 ft (16,3 m)	38.1 ft (11,6 m)	1516

FIELD SET TFM# 21689-A, 21689-B, 21689-C PROJECT# 2025-11-03-04

THESE PLANS AND SPECIFICATIONS ARE NOT APPROVED TO BE USED FOR THE JOB SITE UNTIL A NOTICE OF OCCUPANCY OR CERTIFICATE OF COMPLETION HAS BEEN ISSUED BY THE AUTHORITY HAVING JURISDICTION. Reproduction, use, or disclosure of any portion of these plans, specifications, or any drawings/documents contained therein, without the express written permission of Reliable Automatic Sprinkler Co., Inc. is strictly prohibited, except as allowed by applicable statutes. TENNESSEE STATE FIRE MARSHAL'S OFFICE

Valve Trip Time Information

The actuator that operates the Model DDX-LP Low-Pressure Dry System has a variable differential trip ratio that limits the supervisory air/nitrogen pressure needed as the water supply pressure increases. The differential trip ratio is the ratio of the water supply pressure to the supervisory air/nitrogen pressure when the actuator fully opens. (Note: The actuator may partially open prior to reaching the differential trip ratio which could trip the valve; therefore, always provide the minimum supervisory pressure indicated in Table F of this bulletin, which includes an appropriate safety factor.)

For a valve without an accelerator, use the following differential ratio for valve trip time calculations:

Static Water Supply Pressure in psi (bar)	Differential Trip Ratio
50 (3.5)	7
100 (6.9)	10
175 (12.1)	14
250 (17.2)	18
300 (20.7)	21

For other static water pressures, the differential trip ratio may be calculated using the following equations:

- [psi] Differential Trip Ratio = 0.056 x Static Water Supply Pressure in PSI + 4
- [bar] Differential Trip Ratio = 0.811 x Static Water Supply Pressure in BAR + 4

When using the Model B1 mechanical accelerator, use a differential trip ratio of 0 and a time delay in accordance with Figure 2 of Bulletin 323 for the valve to trip.

When using an electronic accelerator, use a differential trip ratio of 0 and a time delay of 3 seconds for the valve to trip.

Installation

The Model DDX-LP Dry Pipe Valve System shall be installed in accordance with NFPA 13, "Standard for the Installation of Sprinkler Systems," as well as the requirements of any authorities having jurisdiction. The direction of flow shall be up through the assembly. Failure to follow installation instructions may void the warranty and/or listing of the valve. Verify compatibility of the Model DDX-LP Dry Pipe Valve System materials with the water supply and the environment where the valve will be installed prior to installation.

The Model DDX-LP Dry Pipe Valve System must be installed in a readily visible and accessible location where a minimum temperature of 40°F (4°C) or above must be maintained. Heat tracing of the Model DDX-LP Dry Pipe Valve System and trim is not permitted. Heat tracing can result in the formation of hardened mineral deposits that can prevent proper operation of the dry pipe valve.

Whenever ambient temperature conditions are high, the water temperature in the Model DDX-LP Dry Pipe Valve System pushrod chamber may rise, thereby increasing the pressure in the chamber to values exceeding the rated pressure of the system. Where normal temperature and pressure is exceeded, a pressure relief kit (P/N 6503050003; ordered separately) can be installed into the pushrod chamber release line to limit the pressure to 250 psi (17.2 bar).

The valve and trim kit has been tested, approved, and listed in accordance with UL and FM standards. Hydrostatically testing the valve and trim to pressures higher than their rating is limited to the hydrostatic test as referenced by NFPA 13. The clapper can remain in the closed position and the trim kit need not be isolated.

Normal operation and hydrostatic testing does not address the occurrence of a water hammer which may damage the valve. A water hammer can create pressure greater than the rated pressure of the equipment and should be avoided by all necessary means. Water hammer may occur from (but is not limited to) improper fire pump settings, underground construction work, or improper venting of trapped air in piping.

DO NOT use bleeder valves for testing of the low-pressure switch on the trim. Release of pneumatic pressure from the actuator trim will result in operation of the system.

Air/Nitrogen Pressure Requirement **Table F**

Water Pressure psi (bar)	System Air or Nitrogen Pressure psi (bar)
Maximum	Not Less Than
20 (1.4)	8 (0.6)
30 (2.1)	10 (0.7)
50 (3.4)	12 (.8)
75 (5.2)	13 (.9)
100 (6.9)	15 (1.)
125 (8.6)	16 (1.1)
150 (10.3)	17 (1.2)
175 (12.1)	18 (1.2)
200 (13.8)	19 (1.3)
225 (15.5)	21 (1.4)
250 (17.2)	22 (1.5)
275 (19.0)	23 (1.6)
300 (20.7)	24 (1.7)

Notes:

1. Supervisory air or nitrogen pressure should not exceed 30 psi (2.1 bar). Excess pressure may result in damage to the actuator.
2. Fastest valve operation is achieved with supervisory air or nitrogen pressure indicated; however, pressure must never be less than the minimum specified in the table above.
3. Air maintenance devices that maintain a constant pressure are recommended; however, if a tank-less compressor is used, the "compressor on" setting of the pressure switch must never be lower than the minimum pressure in the table above.

FIELD SET TFM# 21689-A, 21689-B, 21689-C PROJECT# 2025-11-03-04

THESE PLANS AND SPECIFICATIONS ARE REQUIRED TO BE KEPT ON THE JOB SITE UNTIL A FINAL CERTIFICATE OF OCCUPANCY OR PROJECT COMPLETION FORM IS ISSUED BY THIS OFFICE.
No portions, deletions, additions or modifications of any kind are allowed to this approved plan without written permission of this office.
TENNESSEE STATE FIRE MARSHAL'S OFFICE

Model DDX-LP Valve Components **Figure 3**

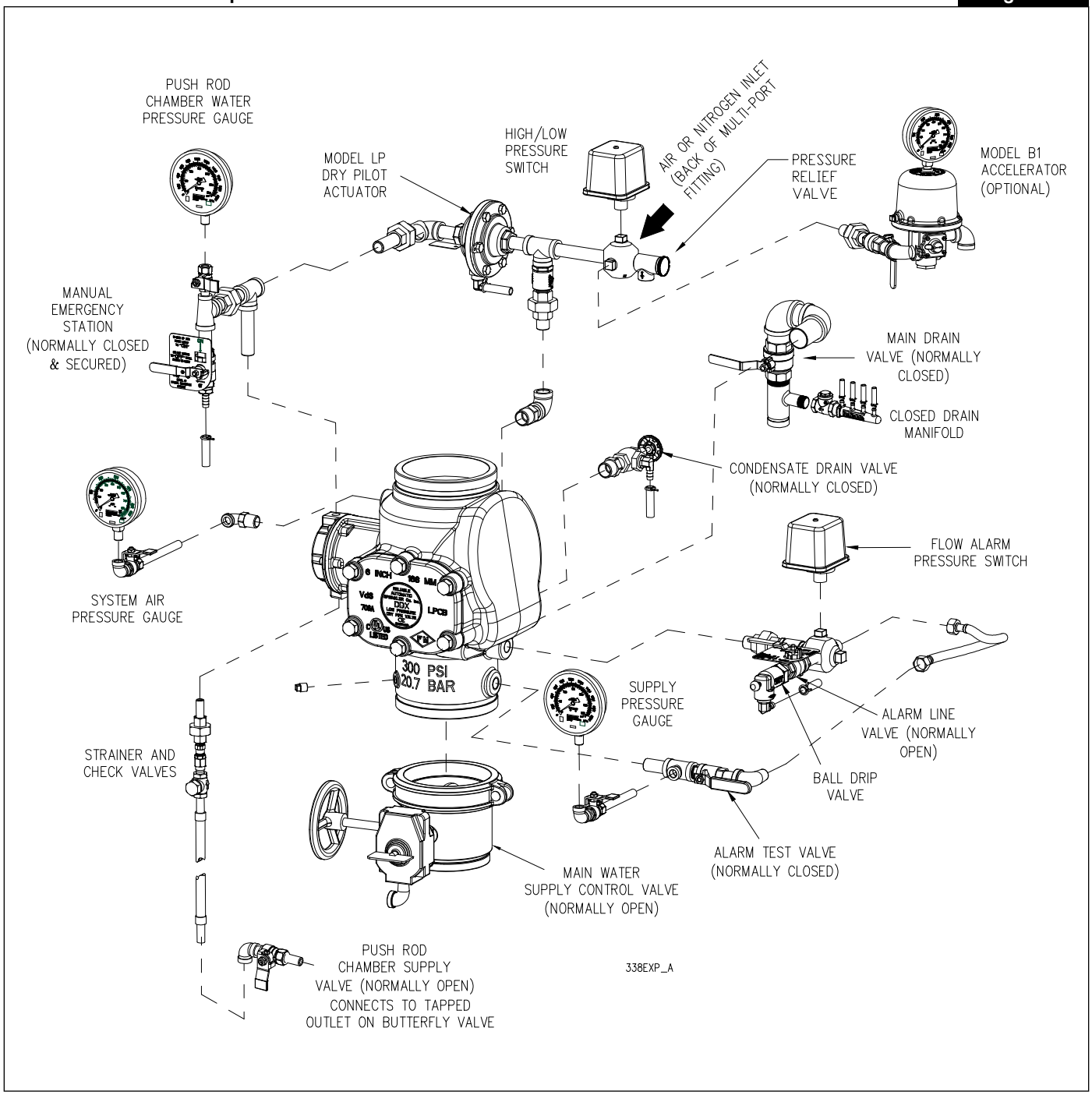

FIELD SET TFM# 21689-A, 21689-B, 21689-C PROJECT# 2025-11-03-04

THESE PLANS AND SPECIFICATIONS ARE REQUIRED TO BE KEPT ON THE JOB SITE UNTIL A FINAL CERTIFICATE OF OCCUPANCY OR PROJECT COMPLETION FORM IS ISSUED BY THIS OFFICE.
Alterations, deletions, additions or modifications of any kind are allowed to this approval only without written permission of this office.
TENNESSEE STATE FIRE MARSHAL'S OFFICE

Valve Reset Procedure

1. Close the main water supply control valve to the DDX-LP valve.
2. Close the Pushrod Chamber Supply valve.
3. Close the valve(s) controlling air or nitrogen supply to the sprinkler system.
4. Open the Main Drain valve and allow system to fully drain. Leave Main Drain valve open.
5. Open all drain valves and vents at low points through-out the system, closing them when flow of water has stopped.
6. Inspect and replace any portion of the detection system and/or sprinkler system subjected to fire conditions.
7. Open the Model B Manual Emergency Station to relieve pressure in the pushrod chamber of the DDX-LP valve and leave open.
8. With the Alarm Line valve open, push in the plunger of Ball Drip valve, forcing the ball from its seat, and drain the alarm line. Close the Alarm Line valve.
9. Push in and rotate the external reset knob counterclockwise (when facing the valve) until you hear a distinct noise indicating that the clapper has reset. **Note:** The reset knob can be rotated only when pressure in the pushrod chamber is vented to atmospheric conditions (see step 7).
10. Open the Pushrod Chamber Supply valve and allow water to fill the pushrod chamber. Leave Pushrod Chamber Supply valve in the open position.
11. Close the Model B Manual Emergency Station valve when a steady stream of water is passing through the valve.
12. Allow water to flow through the Model LP Dry Pilot Actuator until all air is purged from the actuation piping.
13. Close the dry pilot actuator by opening the air or nitrogen supply quick fill valve. Allow the pressure to build to the level specified in Table F then set the pneumatic supply to automatic operation. **Note:** It may be necessary to temporarily close the main drain valve in order to build supervisory pressure to the recommended level.)
14. Open the Alarm Line valve and verify that the Main Drain valve is open. Slightly open the main valve controlling water supply to the Model DDX-LP Valve, closing the Main Drain valve fully when water flow is heard. Observe if air or water leaks through the Ball Drip valve. If no leak occurs, the DDX-LP clapper is sealed.
15. If there is an accelerator installed on the system, reset it now following the manufacturer's instructions. For the Reliable Model B1 Accelerator, please refer to Technical Bulletin 323. **Note:** The air or nitrogen system must be in automatic operation in order for the accelerator to set up properly.
16. Slowly open the main valve controlling water supply until fully opened, and verify that it is properly monitored.
17. Verify that the Pushrod Chamber Supply valve and Alarm Line valve are open. **Note:** The Pushrod Chamber supply valve must remain open to maintain hydraulic pressure in the pushrod chamber after the DDX-LP valve has been reset.
18. Verify that the Model B Manual Emergency Station is secured in the OFF position with the appropriate nylon tie.
19. Notify all concerned parties that the system has been placed into service.

Inspection, Testing, and Maintenance

1. Notify all concerned parties that testing will be performed on system.
2. Water supply — Confirm that valves controlling water supply to the Deluge Valve are opened fully and properly monitored.
3. Alarm line — Confirm that the alarm line valve is open and remains in this position.
4. Other trim valves — Confirm that the pushrod chamber supply valve is open, as well as all pressure gauge valves. The main drain valve, condensate drain valve, and alarm test valve should be closed.
5. Ball drip valve — Push in on the plunger to be sure ball check is off its seat. If no water appears, the Deluge Valve water seat is tight. Inspect the bleed hole on the underside of the pushrod chamber for leakage.
6. Inspect air pressure for conformance to Table F.
7. Releasing device — Check outlet of the releasing device (i.e., hydraulic manual emergency station) for leakage. Also verify that tubing drain lines from releasing devices are not pinched or crushed which could prevent proper releasing of the DDX-LP valve.
8. Testing water flow alarm — Open the alarm test valve permitting water from the supply to flow to the electric sprinkler alarm switch and to the mechanical sprinkler alarm (water motor) if installed. After testing, close this valve securely. Push in on the plunger of ball drip valve until all water has drained from the alarm line.
9. Testing of supervisory pressure switch — Close the main water supply control valve. Decrease pneumatic pressure from normal and verify operation of low pressure alarm. Increase pressure form normal and verify operation of high pressure alarm. Reset pneumatic pressure to normal.
10. Operational test — Open the Model B Manual Emergency Station. Alternatively, deplete pneumatic pressure from the sprinkler system. **Note:** AN OPERATIONAL TEST WILL CAUSE THE DELUGE VALVE TO OPEN AND FLOW WATER INTO THE SPRINKLER SYSTEM.
11. Secure the Model B Manual Emergency Station in the OFF position with nylon tie after Deluge Valve is reset.
12. Notify all concerned parties that testing is complete and system has been returned to service.

Testing System Without Operating Deluge Valve

1. Close the valve controlling water supply to the deluge valve and open the main drain valve.
2. Verify that valve supplying hydraulic pressure to the piston/pushrod chamber is open, allowing water to enter the pushrod chamber.
3. Deplete pneumatic pressure from the sprinkler system.
4. Loss of pneumatic pressure must result in a sudden drop of water pressure in the pushrod chamber, as indicated by the pressure gauge on the hydraulic release trim.
5. Reset the valve per the reset instructions.

FIELD SET TFM# 21689-A, 21689-B, 21689-C PROJECT# 2025-11-03-04

THESE PLANS AND SPECIFICATIONS ARE REQUIRED TO BE KEPT ON THE JOB SITE UNTIL A FINAL CERTIFICATE OF OCCUPANCY OR PROJECT COMPLETION FORM IS ISSUED BY THIS OFFICE.
No alterations, deletions, additions or modifications of any kind are allowed to this approval without written permission of this office.
TENNESSEE STATE FIRE MARSHAL'S OFFICE

Draining Excess/Condensate Water

1. Notify all concerned parties that maintenance is being performed on the system.
2. Close the Main Water Supply Control valve to the system.
3. Open the Main Drain valve.
4. Open the Condensate Drain valve until all water has drained.
5. Close Condensate Drain valve.
6. Allow supervisory pressure to return to normal.
7. Partially open the Main Water Supply Control valve.
8. Slowly close the Main Drain valve.
9. Fully open the Main Water Supply Control valve.
10. Notify all concerned parties that the system has been returned to service.

After fully resetting the Reliable Model DDX-LP Dry Pipe Valve System, confirm that all valves are in the correct position and properly monitored as required by NFPA 13:

- Main Water Control Valve: Open
- Push Rod Chamber Supply Valve: Open
- Accelerator Inlet Valve (if present): Open
- Air or Nitrogen Supply Valve: Open
- Alarm Line Valve: Open
- Alarm Test Valve: Closed
- Main Drain Valve: Closed
- Emergency Manual Release Valve: Closed (Secured)

Maintenance

The owner is responsible for maintaining the fire protection system in proper operating condition. Any system maintenance or testing that involves placing a control valve or detection/control system out of service may eliminate the fire protection that is provided by the fire protection system.

The Reliable Model DDX-LP valve and associated equipment shall periodically be given a thorough inspection and test. NFPA 25, "Inspection, Testing, and Maintenance of Water Based Fire Protection Systems," provides minimum maintenance requirements. System components shall be tested, operated, cleaned, and inspected at least annually, and parts replaced as required. Replace any components found to be corroded, damaged, worn, or non-operable. Increase the frequency of inspections when the valve is exposed to corrosive conditions or chemicals that could impact materials or operation of the assembly.

If face plate is removed during maintenance, torque face plate bolts to the following values during re-installation:

- 35 ft-lbs. (47 N·m) for 2" through 4" valves
- 70 ft-lbs. (95 N·m) for 6"-8" valves

Guarantee

For Reliable Automatic Sprinkler, Co., Inc. guarantee, terms, and conditions, visit www.reliablesprinkler.com.

Listings & Approvals

Reliable Model DDX-LP Dry Pipe Valves with trim that includes a Model LP Dry Pilot Actuator, when used as a complete system are:

- Listed by Underwriters Laboratories, Inc. and UL certified for Canada (cULus).
- FM Approved
- LPCB: 4" (100mm), 165mm, 6" (150mm) & 8" (200mm) only)
- CE
- UKCA: 0832-UKCA-S5044, -S5099, or -S5100

Ordering Information

Specify:

Valve Model DDX-LP Dry Pipe Valve System

Size (See Table A)

End Connections (See Table A)

Standard Trim

- Fully assembled with control valve
- Fully assembled without control valve
- Segmentally assembled trim
- Loose trim (**Note:** Loose trim does not include low pressure switch [P/N 6990019313] or alarm switch [P/N 6990006382]; order separately)

Options

- Model B1 Accelerator (P/N 6501200019)
- Pushrod Chamber Pressure Relief Kit (P/N 6503050001)

Service Kits

Service kits are available for routine servicing of the valve (reference Assembly Drawings on website). Service kits for the Model DDX Deluge Valve include the following components:

- Clapper Seal Assembly (item 8)
- Cover Gasket (item 9)
- Bumpstop(s) (item 10)
- Push rod chamber diaphragm (item 18)
- Grease (item 42)

2", 2-1/2", and 3" Model DDX Service Kit: PN 6501200R03
4" Model DDX Service Kit: PN 6501200R04
6" Model DDX Service Kit: PN 6501200R05
8" Model DDX Service Kit: PN 6501200R06

Note: Early generation 4" and 6" Model DDX valves utilize a drop-in brass clapper. Service kits for early Model DDX valves are as follows:

4" Early generation DDX Deluge Valve Service Kit: PN 6501200R07
6" Early generation DDX Deluge Valve Service Kit: PN 6501200R08

FIELD SET TFM# 21689-A, 21689-B, 21689-C PROJECT# 2025-11-03-04

THESE PLANS AND SPECIFICATIONS ARE REQUIRED TO BE KEPT ON THE JOB SITE UNTIL A FINAL CERTIFICATE OF OCCUPANCY OR PROJECT COMPLETION FORM IS ISSUED BY THIS OFFICE.
This plan, its designs, deletions, additions or modifications of any kind are allowed to be approved by the Fire Protection Contractor without written permission of this office.
TENNESSEE STATE FIRE MARSHALL'S OFFICE
P/N 9999970437

Hanger Material

FIELD SET TFM# 21689-A, 21689-B, 21689-C PROJECT# 2025-11-03-04

THESE PLANS AND SPECIFICATIONS ARE REQUIRED TO BE KEPT ON THE JOB SITE UNTIL A FINAL CERTIFICATE OF OCCUPANCY OR PROJECT COMPLETION FORM IS ISSUED BY THIS OFFICE.
No alterations, deletions, additions or modifications of any kind are allowed to this approved set without written permission of this office.
TENNESSEE STATE FIRE MARSHAL'S OFFICE

Fig. 69 Adjustable Swivel Ring, Tapped Per NFPA Standards

Size Range: 1/2" through 8"
Material: Carbon steel
Finish: ❑ Galvanized
Service: Recommended for suspension of non-insulated **stationary** pipe line.
Maximum Temperature: 650° F
Approvals: Complies with Federal Specification A-A-1192A (Type 10) *WW-H-171-E (Type 10)*, ANSI/MSS SP-69 and MSS SP-58 (Type 10). UL Listed and FM Approved (Sizes 3/4" - 8").
Features:

- Threads are countersunk so that they cannot become burred or damaged.
- Knurled swivel nut provides vertical adjustment after piping is in place.
- Captured swivel nut in the 1/2" through 6" sizes. The capture is permanent in the bottom portion of the band, allowing the hanger to be opened during installation if desired, but not allowing the nut to fall completely out.

Ordering: Specify size, figure number and name.
Note: The acceptability of galvanized coatings at temperatures above 450°F is at the discretion of the end user.
Metric nut available upon request. Non-captured nut also available upon request.



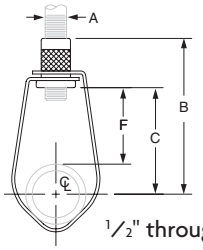

1/2" through 1" pipe

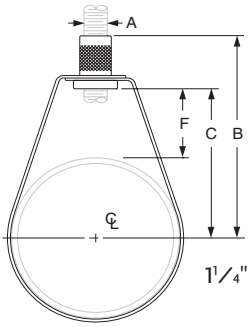

1 1/4" through 8" pipe

FIG. 69: LOADS (LBS) • WEIGHT (LBS) • DIMENSIONS (IN)						
Pipe Size	Max Load	Weight	Rod Size A	B	C	F
1/2	300	0.10	3/8	2 7/8	2	1 9/16
3/4		0.10		2 3/4	1 7/8	1 5/16
1		0.10		2 9/16	1 11/16	1
1 1/4		0.10		2 5/8	1 3/4	7/8
1 1/2		0.10		2 3/4	1 7/8	
2		0.11		3 1/4	2 3/8	1 1/8
2 1/2	525	0.20		4	2 3/4	1 5/16
3		0.20		3 13/16	2 15/16	1 3/16
4	650	0.30		4 11/16	3 13/16	1 9/16
5	1,000	0.54	1/2	5 5/16	4 3/8	
6		0.65		6 11/16	5 9/16	2 1/4
8		1.00		8	7	2 11/16

Note: Reflects changes in rod diameter from previously published data per recent revisions in MSS-SP-58 & 69

PROJECT INFORMATION	APPROVAL STAMP
Project:	❑ Approved
Address:	❑ Approved as noted
Contractor:	❑ Not approved
Engineer:	**Remarks:**
Submittal Date:	
Notes 1:	
Notes 2:	

THESE PLANS AND SPECIFICATIONS ARE REQUIRED TO BE KEPT ON THE JOB SITE UNTIL A FINAL CERTIFICATE OF OCCUPANCY OR PROJECT COMPLETION FORM IS ISSUED BY THIS OFFICE.
No alterations, deletions, additions or modifications of any kind are allowed to this approved set without written permission of this office.
TENNESSEE STATE FIRE MARSHALL'S OFFICE

FIELD SET TFM# 21689-A, 21689-B, 21689-C PROJECT# 2025-11-03-04

Fig. 98 - Rod Stiffener

Component of State of California OSHPD Approved Seismic Restraints System

Size Range — Secures 3/8" thru 7/8" hanger rod
Material — Carbon Steel
Function — Secures channel to hanger rod for vertical seismic bracing.
Approvals — Included in our Seismic Restraints Catalog approved by the State of California Office of Statewide Health Planning and Development (**OSHPD**). For additional load, spacing and placement information relating to OSHPD projects, please refer to the TOLCO Seismic Restraint Systems Guidelines
Finish — Electro Galvanized
Note — Available in HDG finish or Stainless Steel materials.
Order By — Figure number

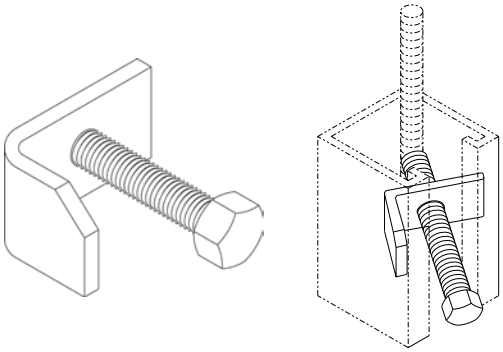

Fig. 99 - All Thread Rod Cut to Length

Size Range — Secures 3/8" thru 7/8" rod in 1" increments
Material — Carbon Steel
Maximum Temperature — 750°F
Finish — Plain
Note — Available in Electro-Galvanized and HDG finish or Stainless Steel materials.
Order By — Figure number, rod diameter, rod length and finish

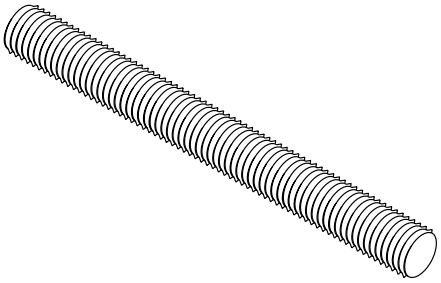

Dimensions	
Rod Size	**Max. Rec. Load Lbs. For Service Temp 650°F**
3/8	730
1/2	1350
5/8	2160
3/4	3230
7/8	4480

Fig. 100 - All Thread Rod Full Lengths

Size Range — Secures 3/8" thru 1½" rod in 10' lengths
Material — Carbon Steel
Maximum Temperature — 750°F
Finish — Plain
Note — Available in Electro-Galvanized and HDG finish or Stainless Steel materials.
Order By — Figure number, rod diameter and finish

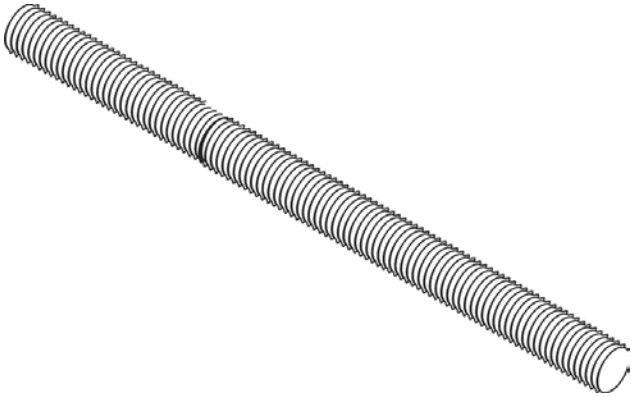

Dimensions • Weights		
Rod Size	**Max Rec. Load Lbs. For Service Temps 650°F**	**Approx. Wt./100**
1/4	240	12
3/8	730	29
1/2	1350	53
5/8	2160	84
3/4	3230	123
7/8	4480	169
1	5900	222
1¼	9500	360
1½	13800	510

FIELD SET TFM# 21689-A, 21689-B, 21689-C PROJECT# 2025-11-03-04

THESE PLANS AND SPECIFICATIONS ARE REQUIRED TO BE KEPT ON THE JOB SITE UNTIL A FINAL CERTIFICATE OF OCCUPANCY OR PROJECT COMPLETION FORM IS ISSUED BY THIS OFFICE.
No alterations, deletions, additions or modifications of any kind are allowed to this approved set without written permission of this office.
TENNESSEE STATE FIRE MARSHAL'S OFFICE

OFFICE/MANUFACTURING FACILITY • 1375 SAMPSON AVE. • CORONA, CA 92879 • PH: 951.737.5599 • FAX: 951.737.0330
CUSTOMER SERVICE • 800.786.5266
www.tolco.com



2022 PRODUCT CATALOG

FIELD SET - TFM# 21685-A, 21689-B, 21689-C, PROJECT# 2025-11-03-04

SAMMYS®

THESE PLANS AND SPECIFICATIONS ARE REQUIRED TO BE KEPT ON THE JOB SITE UNTIL A FINAL CERTIFICATE OF OCCUPANCY OR PROJECT COMPLETION FORM IS ISSUED BY THIS OFFICE.
No alterations, deletions, additions or modifications of any kind are allowed to this document without the written permission of the TENNESSEE STATE FIRE MARSHAL'S OFFICE

TABLE OF CONTENTS

SAMMYS®

Sammys® for Wood ..... 4 - 5

Sammys® for Steel ..... 6 - 7

Sammy X-Press® for Steel ..... 8 - 9

Sammys® for Concrete ..... 10 - 11

Sammys Toggle™ 12

Dektite® Pipe Flashing 12

Sammys Pole Tool™ 13

Approvals 14

Special Notes 15

FIELD SET TFM# 21689-A, 21689-B, 21689-C PROJECT# 2025-11-03-04

Warranty • Disclaimer of Warranty

Proper fastener connection design takes in to account where and how fasteners are used. Allowance for special characteristics in materials, differences in materials, differences in types of materials being joined, unique or unusual environmental service or installation conditions and the safety factors required by anticipating normal or short term loading conditions must be considered. Due to possible differences in specifications, applications, and interpretation of results, purchasers and specifiers must make their own evaluation of the products, to determine the suitability of these products for intended use. All warranties of Buildex products, expressed or implied, including the warranties of merchantabilty and fitness for particular purposes are specifically excluded except for the following: Buildex will repair or replace any product which, within twelve months after sale by Buildex or its distributors, is found by Buildex to be defective in material or workmanship - normal wear and tear accepted. This is the sole warranty of Buildex and the sole remedy available to distributor or buyer. Buildex shall not be liable for any injury, loss or damage, direct, indirect, or consequential, arising out of the use of, or the inability to use, any Buildex product.

THESE PLANS AND/OR SPECIFICATIONS ARE REQUIRED TO BE KEPT ON THE JOB SITE UNTIL A FINAL CERTIFICATE OF OCCUPANCY OR PROJECT COMPLETION FORM IS ISSUED BY THIS OFFICE.

No alterations, deletions, additions or modifications of any kind are allowed to this approved set without written permission of this office.

TENNESSEE STATE FIRE MARSHAL'S OFFICE

WOOD & STEEL INSTALLATION

1. Install appropriate Sammy nut driver (as shown on box label) in a 3/8" or ½" portable drill and insert the anchor into the nut driver.
2. Position drill perpendicular to the structural member and begin drilling **(DO NOT USE IMPACT OR HAMMER MODE).***
3. When the nut driver spins freely on the cap of the screw, stop drilling and remove. Installation is now complete.
   - *DSTR and SWDR models add retainer nut and hand tighten (torque to 20 in-lbs max)*

*For Sammys for Steel, use drill speeds as shown below:

SAMMYS FOR STEEL	SUGGESTED DRILL SPEED (RPM)
DSTR1-1/2, TEK 50, TEK 5.0, SDWR 1-1/2, SH-TEK 50	0 - 1800
All Other SAMMYS for Steel	0 - 2500

VERTICAL INSTALLATION



HORIZONTAL INSTALLATION

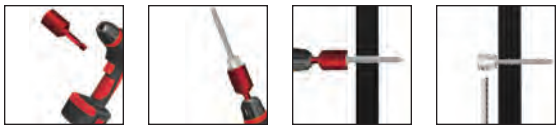

CONCRETE INSTALLATION

1. Using included 1/4"diameter carbide tip drill bit, predrill the concrete member to a depth of 2", with a hammer drill or rotary hammer set on hammer mode.
   - *For faster concrete installation see available concrete installation kit (8122910)*
2. Install appropriate Sammy nut driver (as shown on box label) in a 3/8" or 1/2" portable drill and insert the anchor into the nut driver.
3. Position drill perpendicular to the structural member and begin drilling **(DO NOT USE IMPACT OR HAMMER MODE).**
4. When the nut driver spins freely on the cap of the screw, stop drilling and remove. Installation is now complete.

VERTICAL INSTALLATION



HORIZONTAL INSTALLATION





***Note:** SAMMYS nut drivers have a unique spin off feature which provides a fast and safe installation each time. When the face of the driver comes in contact with the material you are installing into, continue drilling until nut driver spins free. Installation is then complete. Warranty is void if other tools (or modified nut drivers) are used for installation.*

Eye protection should be worn at all times when installing this product

SAMMY X-PRESS INSTALLATION

Only install Sammy X-press with UXPIT tool (8194910)

1. Insert the UXPIT hex receiver into 3/8" or ½" portable drill and pull handle end of tool away from drill to expose 25/64" drill bit; set aside handle end of tool
2. Drill pilot hole through metal deck or purlin
3. Slide handle end of tool over drill bit until it connects to the receiver and insert Sammy X-press anchor into socket
4. Insert the Sammy X-Press anchor through the pre-drilled hole
5. While holding onto tool handle, start the drill Sammy X-press anchor until it spins freely

   For structural concrete over metal deck, follow steps above *before* pouring concrete

   For non-structural lightweight concrete applied over metal deck not for use with air dry density greater than 35 PCF, follow steps above after the lightweight concrete has been applied

ITW CCNA Terms and Conditions

Visit www.itwccna.com for terms and conditions

FIELD SET TFM# 21689-A, 21689-B, 21689-C PROJECT# 2025-11-03-04

THESE PLANS AND SPECIFICATIONS ARE REQUIRED TO BE KEPT ON THE JOB SITE UNTIL A FINAL CERTIFICATE OF OCCUPANCY OR PROJECT COMPLETION FORM IS ISSUED BY THIS OFFICE.
No alterations, deletions, additions or modifications of any kind are allowed to this approved set without written permission of this office.
TENNESSEE STATE FIRE MARSHAL'S OFFICE



SAMMYS FOR WOOD – Vertical Application

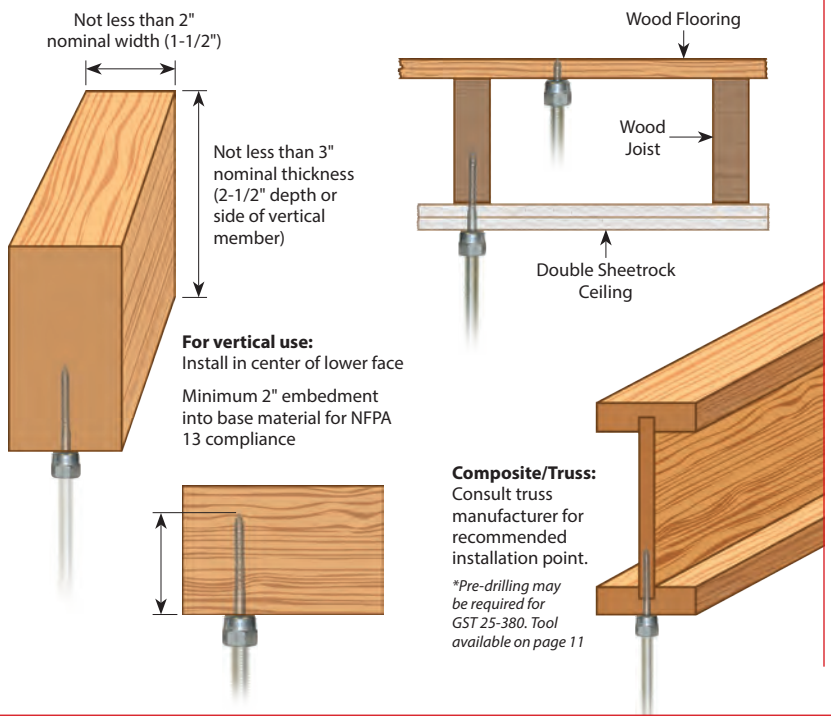

For vertical use:
Install in center of lower face

Minimum 2" embedment into base material for NFPA 13 compliance

Composite/Truss:
Consult truss manufacturer for recommended installation point.

**Pre-drilling may be required for GST 25-380. Tool available on page 11*

PRODUCT FEATURES

- No pre-drilling required
- Quick to install using the Sammy Nut Driver with an 18V cordless drill
- Saves time from traditional methods
- Reduces installation costs
- Assembled in the U.S.A.

View our installation videos:
www.sammysanchors.com/install

VERTICAL MOUNT

Approvals	Rod Size	Part Number	Model	Screw Description	Ultimate Pullout (lbs)	UL Test Load (lbs)	FM Test Load (lbs)	Box Qty	Case Qty	Nut Driver
	1/4"	8002957	GST 100	1/4 x 1"	210 (7/16" OSB) 760 (3/4" Ply)			25	125	#14 Black Part # 8113910
	1/4"	8003957	GST 200	1/4 x 2"	1760 (Fir)			25	125	#14 Black Part # 8113910
UL	3/8"	8007957	GST 10	1/4 x 1"	210 (7/16" OSB) 760 (3/4" Ply)	300		25	125	#14 Black Part # 8113910
UL FM	3/8"	8008957	GST 20	1/4 x 2"	1760 (Fir)	850	1475	25	125	#14 Black Part # 8113910
UL	3/8"	8068925	GST 20-SS*	1/4 x 2"	1760 (Fir)	850		25	125	#14 Black Part # 8113910
UL	3/8"	8009925	GST 25-380	3/8 x 2-1/2"	2113 (Fir)	1500		25	125	#14 Black Part # 8113910
UL FM	3/8"	8010957	GST 30	1/4 x 3"	2060 (Fir)	1500	1475	25	125	#14 Black Part # 8113910
	1/2"	8013925	GST 2	1/4 x 2"	1760 (Fir)			25	125	#14 SW Red Part # 8114910
	1/2"	8015925	GST 3	1/4 x 3"	2275 (Fir)			25	125	#14 SW Red Part # 8114910

* GST-20-SS is Stainless Steel

SAMMYS NUT DRIVERS



#14 Black Nut Driver
Part # 8113910



#14 SW Red Nut Driver
Part # 8114910



#14 SH Orange Nut Driver
Part # 8273910

SPECIAL NUT DRIVER SYSTEM: The nut drivers were designed with a unique spin-off feature which provides a fast and safe installation each time. When the face of the driver comes into contact with the material you are installing into, continue drilling until nut driver spins free. Installation is then complete. Warranty requires the use of the appropriate nut driver for installations.

FIELD SET TFM# 21689-A, 21689-B, 21689-C PROJECT# 2025-11-03-04

SIDEWINDER® FOR WOOD – Horizontal Application

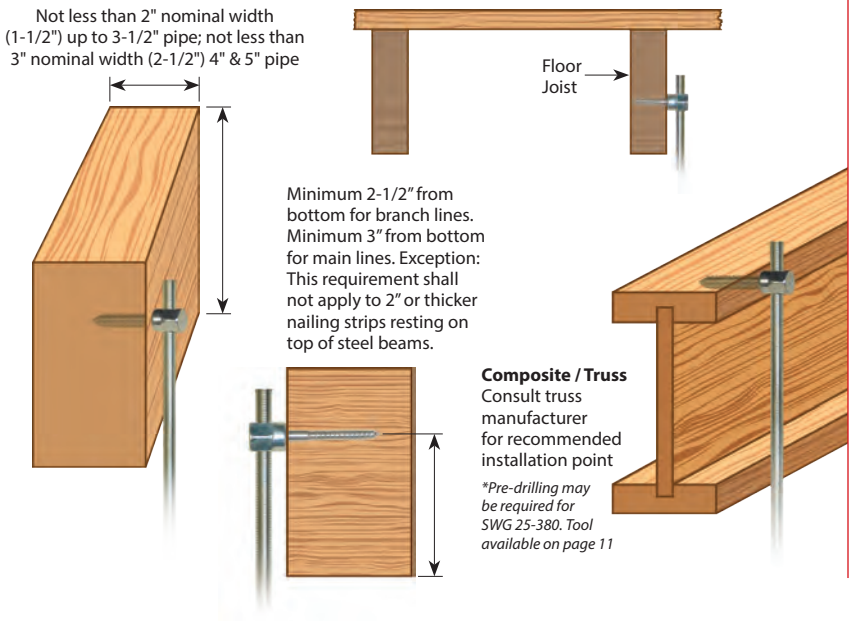

PRODUCT FEATURES

- No pre-drilling required
- Quick to install using the Sammy Nut Driver with an 18V cordless drill
- Saves time from traditional methods
- Reduces installation costs
- Assembled in the U.S.A.

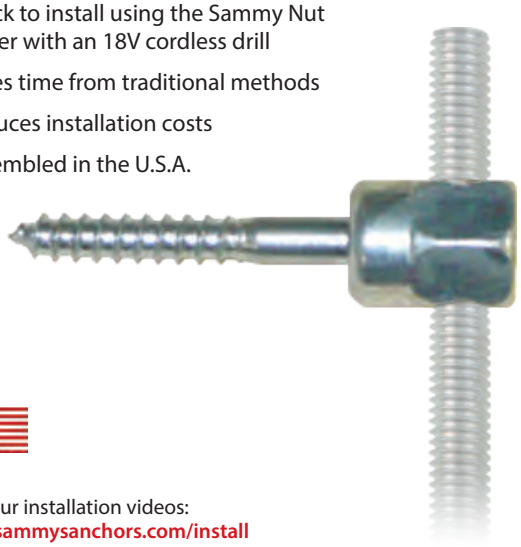

View our installation videos:
www.sammysanchors.com/install

HORIZONTAL MOUNT

Approvals	Rod Size	Part Number	Model	Screw Description	Ultimate Shear (lbs)	UL Test Load (lbs)	Box Qty	Case Qty	Nut Driver
cULus	3/8"	8020957	SWG 10	1/4 x 1"	622 (Fir)	300	25	125	#14 SW Red Part # 8114910
cULus	3/8"	8021957	SWG 20	1/4 x 2"	1725 (Fir)	1050	25	125	#14 SW Red Part # 8114910
cULus	3/8"	8022925	SWG 25-380	3/8 x 2-1/2"	2249 (Fir)	1500	25	125	#14 SW Red Part # 8114910
	3/8"	8023925	SWG 30	1/4 x 3"	1884 (Fir)	1500	25	125	#14 SW Red Part # 8114910

SAMMYS SWIVEL HEAD™ FOR WOOD – Swivel Application

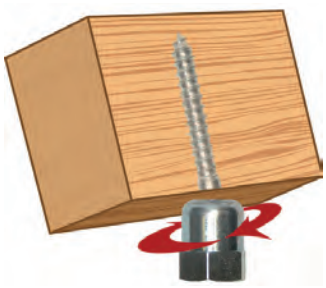



PRODUCT FEATURES

- Eliminates distortion of threaded rod
- Accomodates up to 3½" x 12 pitch roof
- Saves time from traditional methods
- Reduces installation costs
- Assembled in the U.S.A.

View our installation videos:
www.sammysanchors.com/install



SWIVEL MOUNT

Approvals	Rod Size	Part Number	Model	Screw Description	Ultimate Pullout (lbs)	UL Test Load (lbs)	FM Test Load (lbs)	Max. Deflection	Box Qty	Case Qty	Nut Driver
cULus FM	3/8"	8139957	SH-GST 20	1/4 x 2"	1257 (Fir)	1050	1475	17°	25	125	#14 Black Part # 8113910
cULus	3/8"	8269957	SH-GST/CST 20	5/16 x 1-3/4"	1903 Dim. Lumber 1406 @ 45° off vertical Dim. Lumber	1500 850 @ 45°		89°	25	125	#14 SH Orange Part 8273910

*May require pre-drilling; consult joist manufacturer / **Will not swivel until installed with black nut driver

FIELD SET TFM# 21689-A, 21689-B, 21689-C PROJECT# 2025-11-03-04

PLANS AND SPECIFICATIONS ARE REQUIRED TO BE KEPT ON THE JOB SITE UNTIL A FINAL CERTIFICATE OF OCCUPANCY OR PROJECT COMPLETION FORM IS ISSUED BY THIS OFFICE.
No alterations, deletions, additions or modifications of any kind are allowed to this approved set without written permission of this office.
TENNESSEE STATE FIRE MARSHALL'S OFFICE



SAMMYS FOR STEEL – Vertical Application



PRODUCT FEATURES

- Made with Teks® self-drilling fasteners — no pre-drilling required
- Installs into steel range from 20 gauge - 1/2" thickness
- Saves time from traditional methods
- Reduces installation costs
- Quick to install using the Sammys Nut Driver with an 18V cordless drill/driver
- A standard screwgun with a depth sensitive nosepiece should be used to install Teks. For optimal fastener performance, the screwgun should be a minimum of 6 amps and have an RPM range of 0-2500 for Teks 3 and 1-1800 for Teks 5.
- Assembled in the U.S.A.

View our installation videos:
www.sammysanchors.com/install

VERTICAL MOUNT

Approvals	Rod Size	Part Number	Model	Screw Description	Ultimate Pullout (lbs)	UL Test Load (lbs)	FM Test Load (lbs)	Min. Thick	Max. Thick	Box Qty	Case Qty	Nut Driver
	1/4"	8024957	DSTR 100 *	1/4-20 x 1" TEKS 3	1510 (20 ga.)			.036"-20 ga	3/16"	25	125	#14 Black Part # 8113910
	1/4"	8025957	DST 100	1/4-14 x 1" TEKS 3	446 (20 ga.)			.036"-20 ga	3/16"	25	125	#14 Black Part # 8113910
	1/4"	8026957	DST 150	1/4-14 x 1-1/2" TEKS 3	970 (16 ga.)			.036"-20 ga	3/16"	25	125	#14 Black Part # 8113910
	1/4"	8027957	DST 200	1/4-14 x 2" TEKS 3	446 (20 ga.)			.036"-20 ga	3/16"	25	125	#14 Black Part # 8113910
UL FM	3/8"	8038957	DSTR 1 *	1/4-20 x 1" TEKS 3	1510 (20 ga.)	1500	1475	.036"-20 ga	3/16"	25	125	#14 Black Part # 8113910
UL FM	3/8"	8037957	DSTR 1-1/2 *	12-24 x 1-1/2" TEKS 5	1510 (3/16")	1500	1475	036" - 20 ga	1/2"	25	125	#14 Black Part # 8113910
UL FM	3/8"	8039957	DSTR 516 *	5/16-18 x 1-1/4" TEKS 3	2200 (20 ga.)	1500	1475	.036"-20 ga	3/16"	25	125	#14 Black Part # 8113910
	3/8"	8040957	DST 10	1/4-14 x 1" TEKS 3	446 (20 ga.) 970 (16 ga.)			.036"-20 ga	3/16"	25	125	#14 Black Part # 8113910
	3/8"	8041957	DST 15	1/4-14 x 1-1/2" TEKS 3	446 (20 ga.) 970 (16 ga.)			.036"-20 ga	3/16"	25	125	#14 Black Part # 8113910
	3/8"	8042957	DST 20	1/4 - 14 x 2" TEKS 3	446 (20 ga.) 970 (16 ga.)			.036"-20 ga.	3/16"	25	125	#14 Black Part # 8113910
	3/8"	8044957	DST 30	1/4-14 x 3" TEKS 3	446 (20 ga.) 970 (16 ga.)			.036"-20 ga	3/16"	25	125	#14 Black Part # 8113910
UL FM	3/8"	8045957	DST 516	5/16-18 x 1-1/4" TEKS 3	1500 (3/16")	1500	1475	.125"-1/8"	3/16"	25	125	#14 Black Part # 8113910
UL FM	3/8"	8046957	TEK 50	12-24 x 1-1/2" TEKS 5	3125 (3/16")	1500	1475	.250"-1/4"	1/2"	25	125	#14 Black Part # 8113910
	1/2"	8031925	DST 2.0	1/4-14 x 2" TEKS 3	446 (20 ga.) 970 (16 ga.)			.036" - 20 ga.	3/16"	25	125	#14 Black Part # 8113910

*Includes retaining nut

SAMMYS NUT DRIVERS



#14 Black Nut Driver
Part # 8113910



#14 SW Red Nut Driver
Part # 8114910



#14 SH Orange Nut Driver
Part # 8273910

SPECIAL NUT DRIVER SYSTEM: The nut drivers were designed with a unique spin-off feature which provides a fast and safe installation each time. When the face of the driver comes into contact with the material you are installing into, continue drilling until nut driver spins free. Installation is then complete. Warranty requires the use of the appropriate nut driver for installations.

FIELD SET TFM# 21689-A, 21689-B, 21689-C PROJECT# 2025-11-03-04

SIDEWINDER® FOR STEEL – Horizontal Application



PRODUCT FEATURES

- Made with Teks® self-drilling fasteners - no pre-drilling required.
- Installs into steel range from 20 gauge – 1/2" thicknesses.
- A standard screwgun with a depth sensitive nosepiece should be used to install Teks. For optimal fastener performance, the screwgun should be a minimum of 6 amps and have an RPM range of 0-2500 for Teks 3 and 1-1800 for Teks 5.
- Saves time from traditional methods.
- Reduces installation costs.
- Quick to install using the Sammys Nut Driver with an 18V cordless drill/driver.
- Assembled in the U.S.A.

View our installation videos:
www.sammysanchors.com/install



HORIZONTAL MOUNT

Approvals	Rod Size	Part Number	Model	Screw Description	Ultimate Shear (lbs)	UL Test Load (lbs)	FM Test Load (lbs)	Min. Thick	Max. Thick	Box Qty	Case Qty	Nut Driver
	3/8"	8050957	SWD 10	1/4-14 x 1" TEKS 3	1477 (16 ga.)			.060"-16 ga	3/16"	25	125	#14 SW Red Part # 8114910
	3/8"	8052957	SWD 20	1/4-14 x 2" TEKS 3	1477 (16 ga.)			.060"-16 ga	3/16"	25	125	#14 SW Red Part # 8114910
UL FM	3/8"	8055957	SWDR 1 *	1/4-20 x 1" TEKS 3	1900 (20 ga.)	1500	1475	.036"-20 ga	3/16"	25	125	#14 SW Red Part # 8114910
UL FM	3/8"	8054957	SWDR 1-1/2 *	12-24 x 1-1/2" TEKS 5	2375 (3/16")	1500	1475	.188"-3/16"	1/2"	25	125	#14 SW Red Part # 8114910
UL FM	3/8"	8056957	SWDR 516 *	5/16-18 x 1-1/4" TEKS 3	2480 (20 ga.)	1500	1475	.036"-20 ga	3/16"	25	125	#14 SW Red Part # 8114910

*Includes retaining nut

SAMMYS SWIVEL HEAD™ FOR STEEL – Swivel Application

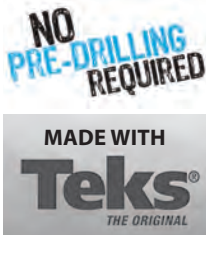



PRODUCT FEATURES

- Eliminates distortion of threaded rod in sloped roof applications.
- Accommodates 3-1/2 x 12 pitch.
- Installs into angled z-purlin; allows threaded rod to hang plumb.
- Allows 17° deflection from vertical.
- Assembled in the U.S.A.

View our installation videos:
www.sammysanchors.com/install

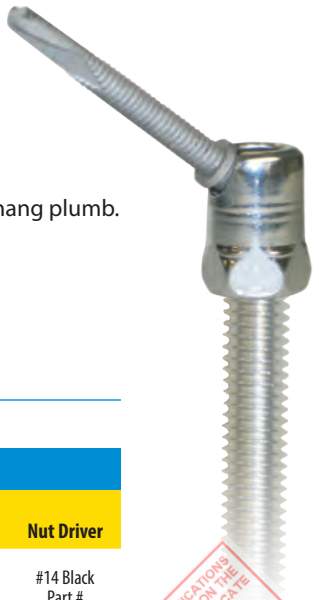

SWIVEL MOUNT

Approvals	Rod Size	Part Number	Model	Screw Description	Ultimate Pullout (lbs)	UL Test Load (lbs)	FM Test Load (lbs)	Min. Thick	Max. Thick	Box Qty	Case Qty	Nut Driver
UL FM	3/8"	8137957	SH-DSTR 1*	1/4-20 x 1" TEKS 3	3220 (3/16")	1500	1475	.036"	3/16"	25	125	#14 Black Part # 8113910
UL	3/8"	8268957	SH-TEK 50	12-24 x 1-5/8" TEKS 5	2368 (1/2" steel vertical) 1306 (45° off vertical) 2281 (3/16" HSS) 1585 (3/16" HSS 45° off vertical)	1500 (vertical) 4" 850 (45° off vertical) 2-1/2"		3/16"	1/2"	25	125	#14 SH Orange Part # 8273910

* Does not comply with ROHS requirements / Includes retaining nut

FIELD SET TFM# 21689-A, 21689-B, 21689-C PROJECT# 2025-11-03-04

PLANS AND SPECIFICATIONS ARE REQUIRED TO BE KEPT ON THE JOB SITE UNTIL A FINAL CERTIFICATE OF OCCUPANCY OR PROJECT COMPLETION FORM IS ISSUED BY THIS OFFICE.
No alterations, deletions, additions or modifications of any kind are allowed to this approved set without written permission of this office.
TENNESSEE STATE FIRE MARSHAL'S OFFICE



SAMMY X-PRESS® – Vertical Application



PRODUCT FEATURES

- The **Sammy X-Press** expands to provide direct vertical attachment in:
  – light gauge steel deck or purlin (22 ga – 1/8").
- Installs in seconds with Sammy X-Press It® Tool, saving time & installation costs.
- Use in applications where access to the back of the installed fastener is prohibited, ie. metal roof deck, tubular steel, or vapor barrier fabric.
- Less jobsite material needed.
- No retaining nut required.
- Provides design flexibility.
- Assembled in the U.S.A.

View our installation videos:
www.sammysanchors.com/install

VERTICAL MOUNT

Approvals	Rod Size	Part Number	Model	Description	Ultimate Pullout (lbs)	UL Test Load (lbs)	UL Min Thick	FM Test Load (lbs)	FM Min Thick	Max. Thick	Box Qty	Case Qty	Application
cULus LISTED	1/4″	8181922	XP 200	Sammy X-Press 200	1146 (22 ga)	185 (Luminaire) 250 (Luminaire)	.027"			.125"	25	125	Metal Deck
cULus LISTED FM APPROVED	3/8″	8150922	XP 20	Sammy X-Press 20	1146 (22 ga)	850 (2½" Pipe) 185 (Luminaire) 250 (Luminaire) 283 (Conduit & Cable)	.027" .027" .060" .030"	940 (2" Pipe) 1475 (4" Pipe)	.029" .104"	.125"	25	125	Metal Deck
cULus LISTED	3/8″	8150922	XP 20	Sammy X-Press 20	1146 (22 ga)	850 (2½″ Pipe)		Pre-Pour Structural Concrete @ 3000 psi Post-Pour Range II LWC ≤ 35 PCF (lbs/ft³)			25	125	Metal Deck (Pre-Pour) Metal Deck (Post-Pour)
cULus LISTED FM APPROVED	3/8″	8153922	XP 35	Sammy X-Press 35	1783 (16 ga)	1500 (4" Pipe) 185 (Luminaire) 250 (Luminaire) 416 (Conduit & Cable)	.060" .030" .060" .060"	940 (2″ Pipe) 1475 (4″ Pipe)	.029″ .104″	.125"	25	125	Purlin



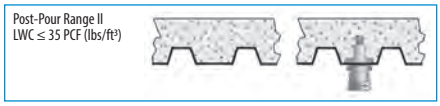

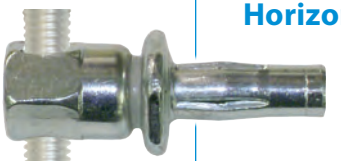

SAMMY X-PRESS SIDEWINDER™ – Horizontal Application



PRODUCT FEATURES

- The **Sammy X-Press Sidewinder** expands to provide horizontal attachment in:
  – 16 ga - 3/16" steel - purlin, tubular steel
- Installs in seconds with Sammy X-Press It® Tool, saving time & installation costs.
- Use in applications where access to the back of the installed fastener is prohibited; ie. metal roof deck, tubular steel, or vapor barrier fabric.
- Less jobsite material needed.
- No retaining nut required.
- Provides design flexibility.
- Assembled in the U.S.A.

View our installation videos:
www.sammysanchors.com/install

HORIZONTAL MOUNT

Approvals	Rod Size	Part Number	Model	Description	Ultimate Shear (lbs)	UL Test Load (lbs)	UL Min Thick	Max. Thick	Box Qty	Case Qty	Application
cULus LISTED	3/8″	8293957	SWXP35	Sidewinder X-Press 35	1798 (16 ga)	1250 (3½" Pipe) 80 (Luminaire) 416 (Conduit & Cable)	.060"	.125"	25	125	Metal Deck/Purlin

FIELD SET TFM# 21689-A, 21689-B, 21689-C PROJECT# 2025-11-03-04

THESE PLANS AND SPECIFICATIONS ARE REQUIRED TO BE KEPT ON THE JOB SITE UNTIL A FINAL CERTIFICATE OF OCCUPANCY OR PROJECT COMPLETION FORM IS ISSUED BY THIS OFFICE.
No alterations, deletions, additions or modifications of any kind are allowed to this approved set without written permission of this office.
TENNESSEE STATE FIRE MARSHAL'S OFFICE

SAMMY X-PRESS SWIVEL – Swivel Application



PRODUCT FEATURES



- The **Sammy X-Press Swivel** allows you to hang plumb in extreme roof pitches: – 89° in z-purlin
  – 45° in metal deck for 12/12 pitch
- Installs in seconds with Sammy X-Press It® Tool, saving time & installation costs.
- Use in applications where access to the back of the installed fastener is prohibited, ie. metal roof deck, tubular steel, or vapor barrier fabric.
- Less jobsite material needed.
- No retaining nut required.
- Provides design flexibility.
- Assembled in the U.S.A.

View our installation videos:
www.sammysanchors.com/install

SWIVEL MOUNT

Approvals	Rod Size	Part Number	Model	Description	Ultimate Pullout (lbs)	UL Test Load (lbs)	UL Min Thick	FM Test Load (lbs)	FM Min Thick	Max. Thick	Box Qty	Case Qty	Application
cULus FM	3/8″	8294922	SXP 20	Swivel X-Press 20	1061 (22 ga Vert) 829 (45° Off Vert)	750 (2" Pipe) 170 Vertical (Luminaire) 80 @ 45° (Luminaire) 283 Vertical (Conduit & Cable) 233 @ 45° (Conduit & Cable)	.029	635 (2" Pipe)	.029"	.125"	25	125	Metal Deck/Purlin
cULus FM	3/8″	8295922	SXP 35	Swivel X-Press 35	1675 (16 ga Vert) 1558 (89° Off Vert)	1250 (3½″ Pipe) 250 Vertical (Luminaire) 80 @ 90° (Luminaire) 500 Vertical (Conduit & Cable) 333 @ 89° (Conduit & Cable)	.059	635 (2″ Pipe)	0.29"	.125″	25	125	Metal Deck/Purlin
†	1/2″	8272957	SXP 2.0	Swivel X-Press 2.0	1061 (22 ga Vert) 829 (45° Off Vert)					.125″	25	125	Metal Deck/Purlin
†	1/2″	8271957	SXP 3.5	Swivel X-Press 3.5	1675 (16 ga Vert) 1558 (89° Off Vert)					.125″	25	125	Metal Deck/Purlin

† cULus Approved for Sway Bar Bracing Only

SAMMY X-PRESS IT® INSTALLATION TOOL – Application



PRODUCT FEATURES



- The **Sammy X-Press** expands to provide direct vertical attachment in:
  – metal deck (22-16 ga)
  – z-purlin (18-16 ga)
- Assembled in the U.S.A.

View our installation videos:
www.sammysanchors.com/install

SAMMY X-PRESS IT®

Part Number	Model	Description	Qty
8194910	UXPIT*	Universal X-Press It Tool	1
8152910	XPDB	25/64" Drill Bit	1

* Tool includes: Sleeve, Bit Receiver, Hex Wrench, and 25/64" Drill Bit

FIELD SET TFM# 21689-A, 21689-B, 21689-C PROJECT# 2025-11-03-04

THESE PLANS AND SPECIFICATIONS ARE REQUIRED TO BE KEPT ON THE JOB SITE UNTIL A FINAL CERTIFICATE OF OCCUPANCY OR PROJECT COMPLETION FORM IS ISSUED BY THIS OFFICE.
No alterations, deletions, additions or modifications of any kind are allowed to this approved set without written permission of this office.
TENNESSEE STATE FIRE MARSHAL'S OFFICE



SAMMYS FOR CONCRETE – Vertical Application

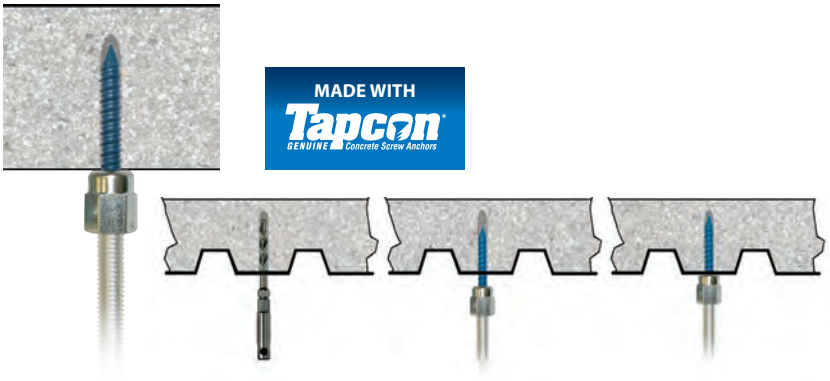

MADE WITH Tapcon® GENUINE Concrete Screw Anchors

PRODUCT FEATURES

- Easy two step process (Drill hole & drive Sammys concrete anchor).
- ¼" pre-drilled pilot hole required.
- Concrete Installation Tool available for a one tool installation process.
- Assembled in the U.S.A.

View our installation videos:
www.sammysanchors.com/install

VERTICAL MOUNT

Approvals	Rod Size	Part Number	Model	Screw Description	Ultimate Pullout (lbs)*	FM Test Load (lbs)	Box Qty	Case Qty	Nut Driver
	1/4"	8058957	CST 200	5/16 x 1-3/4"	2400		25	125	#14 Black Part # 8113910
FM APPROVED	3/8"	8059957	CST 20	5/16 x 1-3/4"	2400	1475	25	125	#14 Black Part # 8113910
	1/2"	8060925	CST 2	5/16 x 1-3/4"	2400		25	125	#14 SW Red Part # 8114910

* Tested in 3000 PSI concrete

For complete performance data see ICC Report ESR-3699

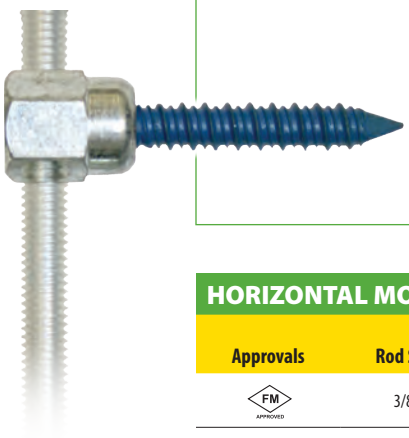

SIDEWINDER® FOR CONCRETE – Horizontal Application

MADE WITH Tapcon® GENUINE Concrete Screw Anchors



PRODUCT FEATURES

- Easy two step process (Drill hole & drive Sammys concrete anchor).
- ¼" pre-drilled pilot hole required.
- Concrete Installation Tool available for a one tool installation process.
- Assembled in the U.S.A.

View our installation videos:
www.sammysanchors.com/install

HORIZONTAL MOUNT

Approvals	Rod Size	Part Number	Model	Screw Description	Ultimate Shear (lbs)*	FM Test Load (lbs)	Box Qty	Case Qty	Nut Driver
FM APPROVED	3/8"	8061957	SWC 20	5/16 x 1-3/4"	2450	1475	25	125	#14 SW Red Part # 8114910

* Tested in 3000 PSI concrete

SAMMYS NUT DRIVERS



#14 Black Nut Driver
Part # 8113910



#14 SW Red Nut Driver
Part # 8114910



#14 SH Orange Nut Driver
Part # 8273910

SPECIAL NUT DRIVER SYSTEM: The nut drivers were designed with a unique spin-off feature which provides a fast and safe installation each time. When the face of the driver comes into contact with the material you are installing into, continue drilling until nut driver spins free. Installation is then complete. Warranty requires the use of the appropriate nut driver for installations.

FIELD SET TFM# 21689-A, 21689-B, 21689-C PROJECT# 2025-11-03-04

SAMMYS FOR CONCRETE – Swivel Application

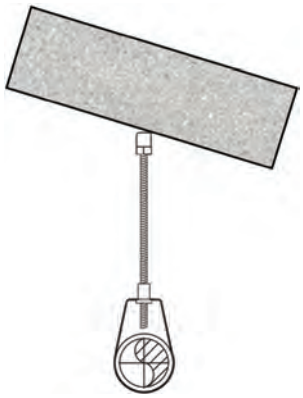

MADE WITH Tapcon® GENUINE Concrete Screw Anchors

PRODUCT FEATURES

- Installs vertically and swivels up to 89° in wood & concrete structures
- Eliminates distortion of threaded rod
- 1/4" pre-drilled pilot hole required
- Concrete installation tool available for a one piece installation process
- Assembled in the U.S.A.

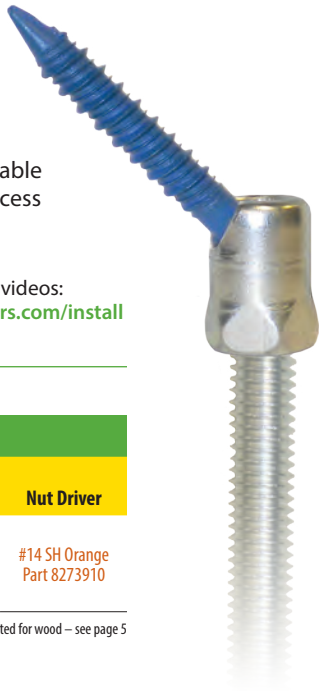

View our installation videos:
www.sammysanchors.com/install

SWIVEL MOUNT

Approvals	Rod Size	Part Number	Model	Screw Description	Ultimate Pullout (lbs)*	Box Qty	Case Qty	Nut Driver
FM APPROVED	3/8"	8269957	SH-GST/CST 20	5/16 x 1-3/4"	2537 in 3000 psi concrete 1459 @ 45°off vertical in 3000 psi concrete 2852 in 6000 psi concrete 1636 @ 45°off vertical in 6000 psi concrete	25	125	#14 SH Orange Part 8273910

* Tested in 3000 PSI concrete

Note: UL Listed for wood – see page 5

CONCRETE / WOOD INSTALLATION KIT

Rotary Hammer Drill into concrete

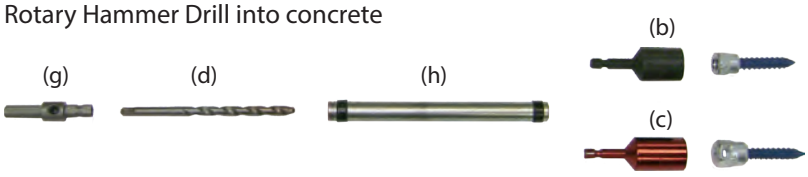

Hammer Drill into concrete

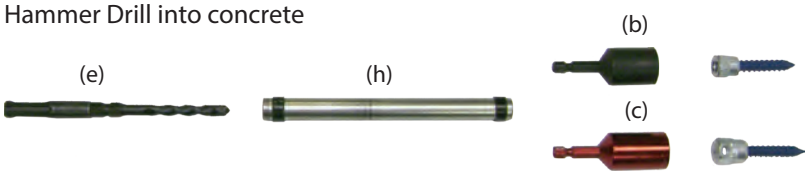



(a)

CONCRETE INSTALLATION KIT

Part Number		Description	Each Qty
8122910	**(a)**	**Concrete Installation Kit –** Kit includes the following items:	**1**
8113910	(b)	#14 Black Nut Driver	1
8114910	(c)	#14 SW Red Nut Driver	1
8116910*	(d)	#250 Bit (1/4")	1
8117910	(e)	SDS Bit (1/4")	1
8118910*	(f)	7/32 Wood Bit	1
8120910*	(g)	HEX 250 Bit Receiver (1/4")	1
8098910*	(h)	SL 250 Sleeve	1

* Can only be purchased with complete kit

FIELD SET TFM# 21689-A, 21689-B, 21689-C PROJECT# 2025-11-03-04

THESE PLANS AND SPECIFICATIONS ARE REQUIRED TO BE KEPT ON THE JOB SITE UNTIL A FINAL CERTIFICATE OF OCCUPANCY OR PROJECT COMPLETION FORM IS ISSUED BY THIS OFFICE.
No alterations, deletions, additions or modifications of any kind are allowed to this approved set without written permission of this office.
TENNESSEE STATE FIRE MARSHAL'S OFFICE



SAMMYS TOGGLE™ – Application



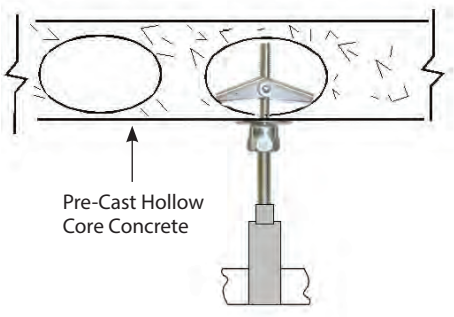

INSTALLATION STEPS

1. Pre-drill a 5/8" hole with a regular drill or hole saw.
2. Insert SST screw into #14 black nut driver. With wing nut and washer on bolt, insert wing nut through surface, and begin installation.
3. When bolt is secure and nut driver spins free, stop drill motor and remove.

Rod Size	Part Number	Model	Screw Description	Ultimate Pullout (lbs)	Box Qty	Case Qty	Nut Driver
3/8"	8064925	SST 30	1/4 x 3"	450 (Lath & Plaster) 404 (2 Layers 5/8 Drywall)	25	125	#14 Black Part # 8113910



DEKTITE® PIPE FLASHING – Application

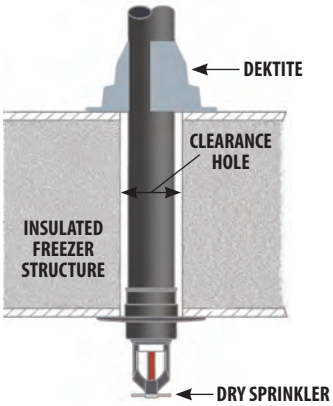

STAY UP TO CODE!

with a quicker, more efficient way to flash your refrigeration/freezer units.

PRODUCT FEATURES

- Complies with NFPA 13 Code Changes.
- Flashing for dry pendant sprinklers subject to extreme temperature change.
- One piece construction is easy to install.
- Pipe diameter markings ensure accurate fit.
- EPDM temperature range of -65°F to +250°F.

Part Number	Description	Pipe Outside Diameter	Dektite Base Diameter	Dektite Height	Box Qty
4003910	1	1/4" - 2"	4-3/4"	3"	10
4004910	2	1-3/4" - 3-1/4"	6-1/4"	4"	10

FIELD SET TFM# 21689-A, 21689-B, 21689-C PROJECT# 2025-11-03-04

THESE PLANS AND SPECIFICATIONS ARE REQUIRED TO BE KEPT ON THE JOB SITE UNTIL A FINAL CERTIFICATE OF OCCUPANCY OR PROJECT COMPLETION FORM IS ISSUED BY THIS OFFICE.
No alterations, deletions, additions or modifications of any kind are allowed to this approved set without written permission of this office.
TENNESSEE STATE FIRE MARSHAL'S OFFICE

SAMMYS POLE TOOL™ – Installation Instructions



Adjust the Pole Tool to length. The adjusting pin must be 18" below the base or the pin may interfere with the rod.

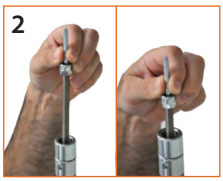

Load rod and Sammys into Pole Tool.



The socket will spin free when the screw is completely installed. Pull down to remove the Pole Tool.

PRODUCT FEATURES

- Speed your labor by 25%.
- Work from the ground up.
- No scaffolding, ladders, or lifts.
- Perfect for working in tight spaces, through ceiling grid, and high vaulted ceilings.
- Works with any Vertical SAMMYS: Wood, Steel or Concrete.

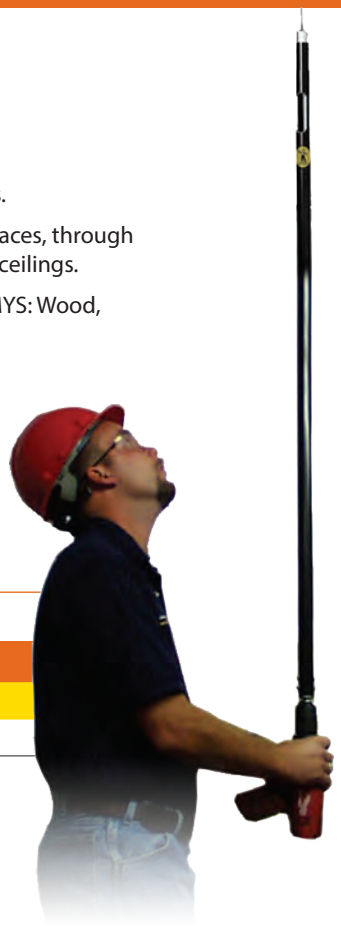

Part Number	Description	Box Qty
SP6	Speedy Pole 6'-18'	1

FIELD SET TFM# 21689-A, 21689-B, 21689-C PROJECT# 2025-11-03-04

THESE PLANS AND SPECIFICATIONS ARE REQUIRED TO BE KEPT ON THE JOB SITE UNTIL A FINAL CERTIFICATE OF OCCUPANCY OR PROJECT COMPLETION FORM IS ISSUED BY THIS OFFICE.
No alterations, deletions, additions or modifications of any kind are allowed to this approved set without written permission of this office.
TENNESSEE STATE FIRE MARSHAL'S OFFICE

Part Number	Model	Rod Size	Mount Direction	UL Max Pipe Size	UL Test Load (lbs)	UL Min Thickness	FM Max Pipe Size	FM Test Load (lbs)	FM Min Thickness
SAMMYS FOR WOOD – PIPE HANGER						**Min Wood Thickness**			**Min Wood Thickness**
8007957	GST 10	3/8"	Vertical	CPVC 1-1/2"	300	1-1/2"			
8020957	SWG 10	3/8"	Horizontal	CPVC 1-1/2"	300	1-1/2"			
8008957	GST 20	3/8"	Vertical	2-1/2"	850	1-1/2"	4"	1475	1-1/2"
8068925	GST 20-SS	3/8"	Vertical	2-1/2"	850	1-1/2"			
8010957	GST 30	3/8"	Vertical	4"	1500	1-1/2"	4"	1475	1-1/2"
8009925	GST 25-380	3/8"	Vertical	4"	1500	1-1/2"			
8022925	SWG 25-380	3/8"	Horizontal	3-1/2" - 4"*	1500	1-1/2"			
8021957	SWG 20	3/8"	Horizontal	2-1/2" - 3"**	1050	1-1/2"			
8073925	SWG 20-SS	3/8"	Horizontal	2-1/2"	850	1-1/2"			
8269957	SH-GST/CST 20	3/8"	45° Angle off Vertical	2-1/2"	850	1-1/2"			
8269957	SH-GST/CST 20	3/8"	45° Angle off Vertical	4"	1500	1-1/2"			
8139957	SH-GST 20	3/8"	17° Angle Off Vertical	3"	1050	1-1/2"	4"	1475	1-1/2"
SAMMYS FOR STEEL – PIPE HANGER						**Min Steel Thickness**			**Min Steel Thickness**
8038957	DSTR 1	3/8"	Vertical	4"	1500	.035"	4"	1475	.105"
8037957	DSTR 1-1/2	3/8"	Vertical	4"	1500	.035"	4"	1475	.105"
8039957	DSTR 516	3/8"	Vertical	4"	1500	.037"	4"	1475	.105"
8045957	DST 516	3/8"	Vertical	4"	1500	.188"	4"	1475	.188"
8046957	TEK 50	3/8"	Vertical	4"	1500	.250"	4"	1475	.188"
8055957	SWDR 1	3/8"	Horizontal	4"	1500	.037"	4"	1475	.060"
8056957	SWDR 516	3/8"	Horizontal	4"	1500	.037"	4"	1475	.060"
8054957	SWDR 1-1/2	3/8"	Horizontal	4"	1500	.037"	4"	1475	.060"
8137957	SH-DSTR 1	3/8"	17° Angle off Vertical	4"	1500	.035"	4"	1475	.105"
8268957	SH-TEK 50	3/8"	Vertical 70° Angle off Vertical	2-1/2" 4"	850 1500				
8150922	XP 20	3/8"	Vertical	2-1/2"	850	.027"	2" 4"	940 1475	.029" .105"
8153922	XP 35	3/8"	Vertical	4"	1500	.060"	2″ 4″	940 1475	.029" .125"
8294922	SXP 20	3/8"	Vertical or up to 45°	2"	750	.027"	2″	635	.029"
8295922	SXP 35	3/8"	Vertical or up to 89°	3-1/2"	1250	.060"	2″	635	.029"
8293957	SWXP 35	3/8"	Horizontal	3-1/2"	1250	.060"			
SAMMYS FOR CONCRETE – PIPE HANGER									
8059957	CST 20	3/8″	Vertical				4"	1475	3000psi
8061957	SWC 20	3/8″	Horizontal				4"	1475	3000psi
8150922	XP 20	3/8″	Vertical	2-1/2″	850	Pre-Pour Structural @ 3000psi			
8150922	XP 20	3/8″	Vertical	2-1/2″	850	Post-Pour Range II LWC ≤ 35 PCF (lbs/ft³)			

Part Number	Model	Rod Size	Mount Direction	UL Load Rating (lbs)	UL Min Steel Thickness
SAMMYS FOR STEEL – LUMINAIRE FITTING					
8150922	XP 20	3/8″	Vertical	185 250	.027″ .035″
8153922	XP 35	3/8″	Vertical	185 250	.027″ .035″
8181922	XP 200	1/4″	Vertical	185 250	.027″ .035″
8294922	SXP 20	3/8″	Vertical 45°	170 80	.027″ .027″
8295922	SXP 35	3/8″	Vertical 90°	250 80	.060″ .060″
8293957	SWXP 35	3/8″	Horizontal	80	.060″

Part Number	Model	Rod Size	Mount Direction	UL Load Rating (lbs)	UL Min Steel Thickness	Listed Application
SAMMYS FOR STEEL – CONDUIT, TUBING, AND CABLE						
8150922	XP 20	3/8″	Vertical	283	.027″	Max 4 trade size EMT, RMC, and IMC & 5 trade size rigid PVC conduit
8153922	XP 35	3/8″	Vertical	500	.060″	Max 4 trade size EMT & 6 trade sze RMC, IMC, and rigid PVC conduit
8294922	SXP 20	3/8″	Vertical	283	.027″	Max 4 trade size EMT, RMC, and IMC & 5 trade size rigid PVC conduit
8295922	SXP 35	3/8″	Vertical	500	.060″	Max 4 trade size EMT & 6 trade sze RMC, IMC, and rigid PVC conduit
8293957	SWXP 35	3/8″	Horizontal	500	.060″	Max 4 trade size EMT & 6 trade sze RMC, IMC, and rigid PVC conduit
8149957	CZ2000	1/4″ or 3/8″	Onto Vertical Rod			UL Listed 4S16 - Cable Hanger, Cat. No. C-Z2000 Plenum Rated, Complies w/ NEC Standards

SHEET STEEL GAUGES									
Gauge No.	22 ga	20 ga	18 ga	16 ga	14 ga	12 ga	1/8"	3/16"	1/4"
Nominal Decimal Equivalent	.030"	.036"	.048"	.060"	.075"	.105"	.125"	.188"	.25"

* SWG 25-380 Maximum pipe size in composite wood joist allowed by UL is 3-1/2″

* SWG 25-380 Maximum pipe size in wood timber or joist allowed by UL is 4″

** SWG 20 Maximum pipe size in composite wood joist allowed by UL is 2-1/2″

** SWG 20 Maximum pipe size in wood timber or joist allowed by UL is 3″

UL compliance with NEC Standards.

UL and FM tests were performed in compliance with NFPA 13 Standards.

Fastening requirement: 5 times weight of water-filled schedule 40 pipe plus 250 pounds

FIELD SET TFM# 21689-A, 21689-B, 21689-C PROJECT# 2025-11-03-04

THIS SET OF PLANS & SPECIFICATIONS MUST BE KEPT ON THE JOB SITE AT ALL TIMES DURING THE PERFORMANCE OF WORK. A COPY OF THE CERTIFICATE OF OCCUPANCY SHALL BE KEPT ON THE JOB SITE AT THE COMPLETION OF THE PROJECT. ISSUED BY TENNESSEE STATE FIRE MARSHAL'S OFFICE

No alterations, deletions, or modifications of any kind shall be made to this approved set without written permission of the office. SEE STATE FIRE MARSHAL'S OFFICE

SPECIAL NOTES

ENGINEERING NOTE
The anchors listed by UL were tested in plate steel that measured .188" and .118". Subsequent testing was done for z-purlin applications using (.037") or 20 gauge steel. Testing with the new Sammy X-Press® was completed using (.030") or 22 gauge steel metal deck.

SAMMYS® NUT DRIVERS
Special nut drivers were designed to be used with Sammys. When the appropriate nut drivers are used for installation, the driver spins freely on the screw after installation is complete and eliminates the expected wrist snap, reduces over-torque, and prevents screw failure.

STEEL SCREWS
Due to variations in hardness of certain metals, it should be noted that our self-drilling screws for steel will experience different drill speeds, with an RPM range of 0-2500 for Teks 3 and 1-1800 for Teks 5.

VIBRATORY ENVIRONMENTS
For attaching or anchoring in high vibratory environments, special care should be taken not just for building attachments but also for the hangers or assemblies being supported. Consult local code authorities for accepted anchoring devices.

COMPOSITE JOIST/TRUSS
Truss manufacturers vary installation recommendations for composite joist. UL testing was completed to validate that Sammys and Sidewinders SWG 20 and SWG 25-380 can be installed into the top cord of a truss. Sammy GST 20 can be installed into the center of the lower cord of a composite joist. Penetration of the upright center web is permitted by some joist manufacturers. Consult truss manufacturer for recommended installation point.

Pre-drilling may be required by joist manufacturers. If so, pre-drill pilot hole 1/8" smaller than root diameter of fastener.

Consult the table below:

Part Number	Root Diameter	Hole Size
GST 20	.182"	1/8"
GST 25-380	.280"	7/32"
SWG 20	.182"	1/8"
SWG 25-380	.280"	7/32"

To increase efficiency of the installation process, sleeve tools, bit receivers, and wood bits are available for pre-drilling.

NFPA/NEC STANDARDS
All UL and FM testing complies with NFPA 13 and NEC standards. Check with your local (AHJ) Authority Having Jurisdiction to confirm application and usage.

UL LISTINGS / FM APPROVALS
UL and FM reports are available at www.itwbuildex.com

c UL us LISTED
PIPE HANGER
ALSO LISTED AS CONDUIT AND CABLE HARDWARE
ALSO LISTED AS ANCHOR FOR LUMINAIRE
9R21

FM APPROVED

TECHNICAL DRAWINGS
Technical drawings are available and can be downloaded at www.itwbuildex.com in the following formats: .dwg, .dxf, and .igs.

ASSEMBLED IN THE U.S.A.
ASSEMBLED U.S.A.

CONTACT INFORMATION
Technical Assistance: (800) 848-5611 Option #2
Customer Service: (800) 848-5611 Option #1

FIELD SET TFM# 21689-A, 21689-B, 21689-C PROJECT# 2025-11-03-04

THESE PLANS AND SPECIFICATIONS ARE REQUIRED TO BE KEPT ON THE JOB SITE UNTIL A FINAL CERTIFICATE OF OCCUPANCY OR PROJECT COMPLETION FORM IS ISSUED BY THIS OFFICE.
No alterations, deletions, additions or modifications of any kind are allowed to this approved set without written permission of this office.
TENNESSEE STATE FIRE MARSHAL'S OFFICE



SAMMYS®

NATIONAL HEADQUARTERS
ITW COMMERCIAL CONSTRUCTION,
NORTH AMERICA
155 HARLEM AVE,
GLENVIEW IL 60025
PHONE: 800-848-5611
FAX: 630-893-1270

TECHNICAL SUPPORT
PHONE: 800-848-5611
HOURS: 8:30 A.M. - 5:00 P.M. (CST, M-F)
EMAIL: TECHSUPPORT@ITWCCNA.COM

CUSTOMER SERVICE
PHONE: 800-848-5611
HOURS: 7:30 A.M. - 5:00 P.M. (CST, M-F)
EMAIL: ORDERS@ITWCCNA.COM

WILL CALL/DISTRIBUTION
2501 GALVIN DR
ELGIN, IL 60123
PHONE: 800-848-5611

FIELD SET | TFM# 21689-A, 21689-B, 21689-C PROJECT# 2025-11-03-04

www.itwbuildex.com

© 2022 Illinois Tool Works, Inc.
ITWCCNA-000

THESE PLANS AND SPECIFICATIONS ARE REQUIRED TO BE KEPT ON THE JOB SITE UNTIL A FINAL CERTIFICATE OF OCCUPANCY OR PROJECT COMPLETION FORM IS ISSUED BY THIS OFFICE.
No alterations, deletions, additions or modifications of any kind are allowed to this approved set without written permission of this office.
TENNESSEE STATE FIRE MARSHAL'S OFFICE

SOSR STAND OFF TWO HOLE STRAP FOR CPVC PIPE



CERTIFICATIONS

FEATURES

- Includes flared edges to protect piping
- Rated for use with CPVC fire sprinkler pipe
- Positions pipe 1-1/2" (38 mm) off the mounting surface eliminating the need for wooden spacer blocks
- Can be mounted in both vertical and horizontal positions on concrete, steel and wood
- Meets the UL® 203 stringent upward thrust requirement
- UL® Listed as both a hanger and pipe restraint
- Complies with static load requirements of NFPA® 13
- Includes mounting screws
- Can be used with 3TW backing nut on composite wood joist installations

SPECIFICATIONS

Finish: Pregalvanized

Material: Steel

FIELD SET TFM# 21689-A, 21689-B, 21689-C PROJECT# 2025-11-03-04

THESE PLANS AND SPECIFICATIONS ARE REQUIRED TO BE KEPT ON THE JOB SITE UNTIL A FINAL CERTIFICATE OF OCCUPANCY OR PROJECT COMPLETION FORM IS ISSUED BY THIS OFFICE.
No alterations, deletions, additions or modifications of any kind are allowed to this approved set without written permission of this office.
TENNESSEE STATE FIRE MARSHAL'S OFFICE

Table 1/2						
Catalog Number	**Pipe Size**	**Hole Size (HS)**	**A**	**B**	**C**	**Thickness (T)**
SOSR075	3/4"	0.2"	2 11/16"	3 5/8"	1"	18 ga
SOSR100	1"	0.2"	2 15/16"	3 11/16"	1"	18 ga
SOSR125	1 1/4"	0.2"	3 5/16"	3 5/8"	1"	16 ga
SOSR150	1 1/2"	0.2"	3 7/8"	4 1/2"	1"	16 ga
SOSR200	2"	0.2"	4"	5 1/4"	1"	16 ga

Table 2/2		
Catalog Number	**Hanger Spacing**	**Packing Quantity**
SOSR075	6' max	1.0000
SOSR100	6' max	1.0000
SOSR125	6' max	1.0000
SOSR150	7' max	1.0000
SOSR200	8' max	1.0000

DIAGRAMS

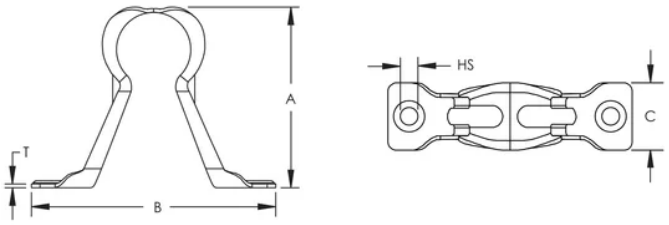

WARNING

nVent products shall be installed and used only as indicated in nVent's product instruction sheets and training materials. Instruction sheets are available at www.nvent.com and from your nVent customer service representative. Improper installation, misuse, misapplication or other failure to completely follow nVent's instructions and warnings may cause product malfunction, property damage, serious bodily injury and death and/or void your warranty.

FIELD SET TFM# 21689-A, 21689-B, 21689-C PROJECT# 2025-11-03-04

THESE PLANS AND SPECIFICATIONS ARE REQUIRED TO BE KEPT ON THE JOB SITE UNTIL A FINAL CERTIFICATE OF OCCUPANCY OR PROJECT COMPLETION FORM IS ISSUED BY THIS OFFICE.
No alterations, deletions, additions or modifications of any kind are allowed to this approved set without written permission of this office.
TENNESSEE STATE FIRE MARSHAL'S OFFICE

FIELD SET TFM# 21689-A, 21689-B, 21689-C PROJECT# 2025-11-03-04

North America
+1.800.753.9221
Option 1 – Customer Care
Option 2 – Technical Support

Europe
Netherlands:
+31 800-0200135
France:
+33 800 901 793

Europe
Germany:
800 1890272
Other Countries:
+31 13 5835404

APAC
Shanghai:
+ 86 21 2412 1618/19
Sydney:
+61 2 9751 8500

Our powerful portfolio of brands:

nVent.com **CADDY ERICO HOFFMAN RAYCHEM SCHROFF TRACER**

© 2024 nVent. All nVent marks and logos are owned or licensed by nVent Services GmbH or its affiliates. All other trademarks are the property of their respective owners.

nVent reserves the right to change specifications without notice.

THESE PLANS AND SPECIFICATIONS ARE REQUIRED TO BE KEPT ON THE JOB SITE UNTIL FINAL CERTIFICATE OF OCCUPANCY OR PROJECT COMPLETION FORM IS ISSUED BY THIS OFFICE.
No alterations, deletions, additions or modifications of any kind are allowed to this approved set without written permission of this office.
TENNESSEE STATE FIRE MARSHAL'S OFFICE

109 SIDE MOUNT STRAP FOR CPVC PIPE



CERTIFICATIONS

FEATURES

- Includes flared edges to protect piping
- Rated for use with CPVC fire sprinkler pipe
- Includes mounting screws

SPECIFICATIONS

Finish: Pregalvanized

Material: Steel

Table 1/2

Catalog Number	Pipe Size	Outer Diameter (OD)	Hole Size (HS)	A	B	C
1090075EG	3/4"	1.05"	7/32"	2 5/16"	1 11/16"	1 3/16"
1090100EG	1"	1.31"	7/32"	2 5/8"	1 15/16"	1 3/16"
1090125EG	1 1/4"	1.66"	7/32"	2 15/16"	2 5/16"	1 3/16"
1090150EG	1 1/2"	1.9"	7/32"	3 3/16"	2 1/2"	1 3/16"

FIELD SET TFM# 21689-A, 21689-B, 21689-C PROJECT# 2025-11-03-04

THESE PLANS AND SPECIFICATIONS ARE REQUIRED TO BE KEPT ON THE JOB SITE UNTIL A FINAL CERTIFICATE OF OCCUPANCY OR PROJECT COMPLETION FORM IS ISSUED BY THIS OFFICE.
No alterations, deletions, additions or modifications of any kind are allowed to this approved set without written permission of this office.
TENNESSEE STATE FIRE MARSHAL'S OFFICE

Catalog Number	Pipe Size	Outer Diameter (OD)	Hole Size (HS)	A	B	C
1090200EG	2"	2 3/8"	7/32"	3 5/8"	3"	1 3/16"

Table 2/2

Catalog Number	Hanger Spacing
1090075EG	5.5' max
1090100EG	6' max
1090125EG	6.5' max
1090150EG	7' max
1090200EG	8' max

DIAGRAMS

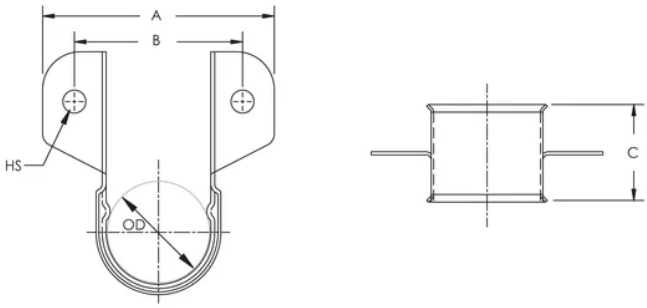

WARNING

nVent products shall be installed and used only as indicated in nVent's product instruction sheets and training materials. Instruction sheets are available at www.nvent.com and from your nVent customer service representative. Improper installation, misuse, misapplication or other failure to completely follow nVent's instructions and warnings may cause product malfunction, property damage, serious bodily injury and death and/or void your warranty.

North America
+1.800.753.9221
Option 1 – Customer Care
Option 2 – Technical Support

Europe
Netherlands:
+31 800-0200135
France:
+33 800 901 793

Europe
Germany:
800 1890272
Other Countries:
+31 13 5835404

APAC
Shanghai:
+ 86 21 2412 1618/19
Sydney:
+61 2 9751 8500

Our powerful portfolio of brands:
nVent.com CADDY ERICO HOFFMAN RAYCHEM SCHROFF TRACER

© 2024 nVent. All nVent marks and logos are owned or licensed by nVent Services GmbH or its affiliates. All other trademarks are the property of their respective owners.

nVent reserves the right to change specifications without notice.

FIELD SET TFM# 21689-A, 21689-B, 21689-C PROJECT# 2025-11-03-04

108 TWO HOLE STRAP FOR CPVC PIPE



CERTIFICATIONS

FEATURES

- Includes flared edges to protect piping
- Rated for use with CPVC fire sprinkler pipe
- Includes mounting screws

SPECIFICATIONS

Finish: Pregalvanized

Material: Steel

Table 1/2

Catalog Number	Pipe Size	Outer Diameter (OD)	Hole Size (HS)	A	B	C
1080075EG	3/4"	1.05"	7/32"	3 1/4"	2 1/4"	1 3/16"
1080100EG	1"	1.31"	7/32"	3 1/2"	2 1/2"	1 3/16"
1080125EG	1 1/4"	1.66"	7/32"	4 1/4"	3 1/4"	1 3/16"
1080150EG	1 1/2"	1.9"	7/32"	4 7/16"	3 7/16"	1 3/16"

FIELD SET TFM# 21689-A, 21689-B, 21689-C PROJECT# 2025-11-03-04

THESE PLANS AND SPECIFICATIONS ARE REQUIRED TO BE KEPT ON THE JOB SITE UNTIL A FINAL CERTIFICATE OF OCCUPANCY OR PROJECT COMPLETION FORM IS ISSUED BY THIS OFFICE.
No alterations, deletions, additions or modifications of any kind are allowed to this approved set without written permission of this office.
TENNESSEE STATE FIRE MARSHAL'S OFFICE

Catalog Number	Pipe Size	Outer Diameter (OD)	Hole Size (HS)	A	B	C
1080200EG	2"	2 3/8"	7/32"	4 15/16"	3 15/16"	1 3/16"

Table 2/2

Catalog Number	Hanger Spacing
1080075EG	5.5' max
1080100EG	6' max
1080125EG	6.5' max
1080150EG	7' max
1080200EG	8' max

DIAGRAMS

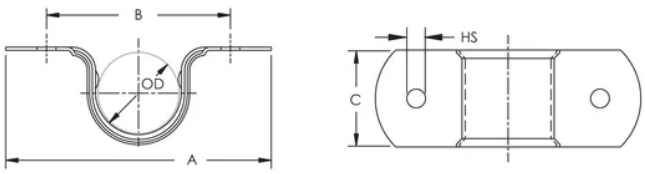

WARNING

nVent products shall be installed and used only as indicated in nVent's product instruction sheets and training materials. Instruction sheets are available at www.nvent.com and from your nVent customer service representative. Improper installation, misuse, misapplication or other failure to completely follow nVent's instructions and warnings may cause product malfunction, property damage, serious bodily injury and death and/or void your warranty.

North America
+1.800.753.9221
Option 1 – Customer Care
Option 2 – Technical Support

Europe
Netherlands:
+31 800-0200135
France:
+33 800 901 793

Europe
Germany:
800 1890272
Other Countries:
+31 13 5835404

APAC
Shanghai:
+ 86 21 2412 1618/19
Sydney:
+61 2 9751 8500

Our powerful portfolio of brands:
nVent.com CADDY ERICO HOFFMAN RAYCHEM SCHROFF TRACER

© 2024 nVent. All nVent marks and logos are owned or licensed by nVent Services GmbH or its affiliates. All other trademarks are the property of their respective owners.

nVent reserves the right to change specifications without notice.

FIELD SET TFM# 21689-A, 21689-B, 21689-C PROJECT# 2025-11-03-04

Seismic Bracing

FIELD SET TFM# 21689-A, 21689-B, 21689-C PROJECT# 2025-11-03-04

THESE PLANS AND SPECIFICATIONS ARE REQUIRED TO BE KEPT ON THE JOB SITE UNTIL A FINAL CERTIFICATE OF OCCUPANCY OR PROJECT COMPLETION FORM IS ISSUED BY THIS OFFICE.
No alterations, deletions, additions or modifications of any kind are allowed to this approved set without written permission of this office.
TENNESSEE STATE FIRE MARSHAL'S OFFICE

UNIVERSAL STRUCTURAL BRACKET



CERTIFICATIONS

FEATURES

- Universal design allows one product to attach directly to concrete, wood, bar joist or I-beam adapters
- Integrated angle gauge easily displays brace member angle of installation
- Snap-off bolt head helps enable easy installation and inspection of seismic sway braces
- Works with 1" through 2" brace pipes to reduce inventory
- Low profile minimizes prying effect on concrete fasteners
- Meets NFPA® 13 as pre-qualified for seismic applications
- FM® Specification Tested
- FM Approved with 12 gauge or thicker Type A solid strut as brace member

SPECIFICATIONS

Finish: Electrogalvanized

Material: Steel

Table 1/2

Catalog Number	Hole Size (HS)	Width (W)	Thickness (T)	A	B	C

FIELD SET TFM# 21689-A, 21689-B, 21689-C PROJECT# 2025-11-03-04

THESE PLANS AND SPECIFICATIONS ARE REQUIRED TO BE KEPT ON THE JOB SITE UNTIL A FINAL CERTIFICATE OF OCCUPANCY OR PROJECT COMPLETION FORM IS ISSUED BY THIS OFFICE.
No alterations, deletions, additions or modifications of any kind are allowed to this approved set without written permission of this office.
TENNESSEE STATE FIRE MARSHAL'S OFFICE

CSBU1	9/16"	1 15/16"	3/16"	2 1/16"	1 5/16"	1 3/8"
CSBU2	13/16"	1 15/16"	3/16"	2 1/16"	1 5/16"	1 3/8"
CSBU58	11/16"	1 15/16"	3/16"	2 1/16"	1 5/16"	1 3/8"

Table 2/2

Catalog Number	D	E	UL Listed Load
CSBU1	1 1/4"	1 3/4"	2000 lb
CSBU2	1 1/4"	1 3/4"	2000 lb
CSBU58	1 1/4"	1 3/4"	2000 lb

FM Loads

Part Number	Brace Member	Horizontal Capacity per Installation Angle from Vertical			
		30°- 44°	45°- 59°	60°- 74°	75°- 90°
CSBU1xx	Schedule 40 Pipe	1,690 lb	2,210 lb	2,660 lb	3,090 lb
	1" EMT Conduit	530 lb	911 lb	1108 lb	1223 lb
	1" Rigid Conduit	1,690 lb	2,210 lb	2,660 lb	3,090 lb
CSBU2xx	Schedule 40 Pipe	1,480 lb	2,290 lb	2,860 lb	3,090 lb
	1" EMT Conduit	530 lb	911 lb	1108 lb	1223 lb
	1" Rigid Conduit	1,480 lb	2,290 lb	2,860 lb	3,090 lb

DIAGRAMS

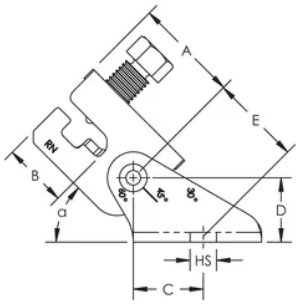

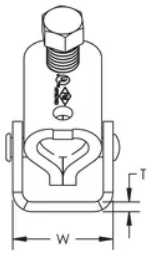

WARNING

nVent products shall be installed and used only as indicated in nVent's product instruction sheets and training materials. Instruction sheets are available at www.nvent.com and from your nVent customer service representative. Improper installation, misuse, misapplication or other failure to completely follow nVent's instructions and warnings may cause product malfunction, property damage, serious bodily injury and death and/or void your warranty.

FIELD SET TFM# 21689-A, 21689-B, 21689-C PROJECT# 2025-11-03-04

THESE PLANS AND SPECIFICATIONS ARE REQUIRED TO BE KEPT ON THE JOB SITE UNTIL A FINAL CERTIFICATE OF OCCUPANCY OR PROJECT COMPLETION FORM IS ISSUED BY THIS OFFICE.
No alterations, deletions, additions or modifications of any kind are allowed to this approved set without written permission of this office.
TENNESSEE STATE FIRE MARSHAL'S OFFICE

FIELD SET TFM# 21689-A, 21689-B, 21689-C PROJECT# 2025-11-03-04

North America
+1.800.753.9221
Option 1 – Customer Care
Option 2 – Technical Support

Europe
Netherlands:
+31 800-0200135
France:
+33 800 901 793

Europe
Germany:
800 1890272
Other Countries:
+31 13 5835404

APAC
Shanghai:
+ 86 21 2412 1618/19
Sydney:
+61 2 9751 8500

Our powerful portfolio of brands:
nVent.com CADDY ERICO HOFFMAN RAYCHEM SCHROFF TRACER

© 2023 nVent. All nVent marks and logos are owned or licensed by nVent Services GmbH or its affiliates. All other trademarks are the property of their respective owners.

nVent reserves the right to change specifications without notice.

QUICK GRIP JR. LATERAL SWAY BRACE

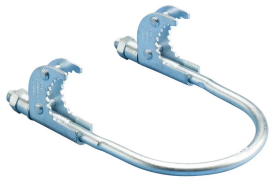

CERTIFICATIONS

FEATURES

- Easy two-step installation eliminates extra trips between structure and service pipe
- Works with 1" and 1 1/4" (25 mm and 32 mm) brace pipes to reduce inventory
- Snap-off bolt head helps enable easy installation and inspection of seismic sway braces
- Meets NFPA®-13 requirements for seismic sway bracing
- Meets CEN/TS 17551:2021 requirements for Seismic Sway Bracing

SPECIFICATIONS

Finish: Electrogalvanized

Material: Steel

Table 1/1

Catalog Number	Pipe Size	Width (W)	Height (H)
CSBQIKCL0100EG	1"	2 5/8"	5 1/8"
CSBQIKCL0125EG	1 1/4"	3"	5 3/8"
CSBQIKCL0150EG	1 1/2"	3 1/4"	5 5/8"

FIELD SET TFM# 21689-A, 21689-B, 21689-C PROJECT# 2025-11-03-04

THESE PLANS AND SPECIFICATIONS ARE REQUIRED TO BE KEPT ON THE JOB SITE UNTIL A FINAL CERTIFICATE OF OCCUPANCY OR PROJECT COMPLETION FORM IS ISSUED BY THIS OFFICE.
No alterations, deletions, additions or modifications of any kind are allowed to this approved set without written permission of this office.
TENNESSEE STATE FIRE MARSHAL'S OFFICE

Catalog Number	Pipe Size	Width (W)	Height (H)
CSBQIKCL0200EG	2"	3 5/8"	6 3/8"

UL Loads (Listed for Restraints)

Part Number	Service Pipe Schedule	Lateral	
		1" Brace Pipe	1 1/4" Brace Pipe
CSBQIKCL0100EG	Dyna-Flow®	N/A	N/A
	10	655 lb	655 lb
	40	655 lb	655 lb
CSBQIKCL0125EG	Dyna-Flow®	655 lb	540 lb
	10	655 lb	540 lb
	40	655 lb	540 lb
CSBQIKCL0150EG	Dyna-Flow®	750 lb	655 lb
	10	750 lb	655 lb
	40	750 lb	655 lb
CSBQIKCL0200EG	Dyna-Flow®	750 lb	540 lb
	10	750 lb	540 lb
	40	750 lb	540 lb

FM Loads

Part Number	Service Pipe Schedule	Lateral			
		Horizontal Capacity per Installation Angle from Vertical			
		30°- 44°	45°- 59°	60°- 74°	75°- 90°
CSBQIKCL0100EG	Lightwall	290 lb	410 lb	495 lb	550 lb
	10	150 lb	210 lb	280 lb	315 lb
	40	475 lb	665 lb	825 lb	925 lb
CSBQIKCL0125EG	Lightwall	290 lb	410 lb	495 lb	550 lb
	10	150 lb	210 lb	280 lb	315 lb
	40	475 lb	665 lb	825 lb	925 lb
CSBQIKCL0150EG	Lightwall	290 lb	410 lb	495 lb	550 lb
	10	150 lb	210 lb	280 lb	315 lb
	40	475 lb	665 lb	825 lb	925 lb
CSBQIKCL0200EG	Lightwall	390 lb	550 lb	670 lb	750 lb
	10	350 lb	500 lb	620 lb	690 lb
	40	490 lb	690 lb	850 lb	950 lb

FIELD SET TFM# 21689-A, 21689-B, 21689-C PROJECT# 2025-11-03-04

THESE PLANS AND SPECIFICATIONS ARE REQUIRED TO BE KEPT ON THE JOB SITE UNTIL A FINAL CERTIFICATE OF OCCUPANCY OR PROJECT COMPLETION FORM IS ISSUED BY THIS OFFICE.
No alterations, deletions, additions or modifications of any kind are allowed to this approved set without written permission of this office.
TENNESSEE STATE FIRE MARSHAL'S OFFICE

DIAGRAMS

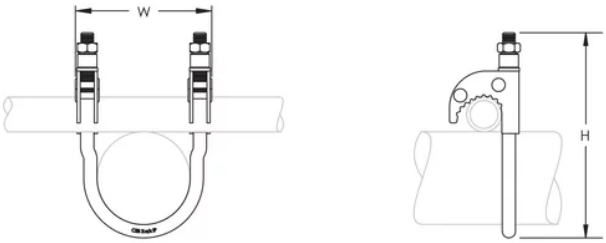

WARNING

nVent products shall be installed and used only as indicated in nVent's product instruction sheets and training materials. Instruction sheets are available at www.nvent.com and from your nVent customer service representative. Improper installation, misuse, misapplication or other failure to completely follow nVent's instructions and warnings may cause product malfunction, property damage, serious bodily injury and death and/or void your warranty.

FIELD SET TFM# 21689-A, 21689-B, 21689-C PROJECT# 2025-11-03-04

North America
+1.800.753.9221
Option 1 – Customer Care
Option 2 – Technical Support

Europe
Netherlands:
+31 800-0200135
France:
+33 800 901 793

Europe
Germany:
800 1890272
Other Countries:
+31 13 5835404

APAC
Shanghai:
+ 86 21 2412 1618/19
Sydney:
+61 2 9751 8500

Our powerful portfolio of brands:
nVent.com CADDY ERICO HOFFMAN RAYCHEM SCHROFF TRACER

© 2023 nVent. All nVent marks and logos are owned or licensed by nVent Services GmbH or its affiliates. All other trademarks are the property of their respective owners.

nVent reserves the right to change specifications without notice.

THESE PLANS AND SPECIFICATIONS ARE REQUIRED TO BE KEPT ON THE JOB SITE UNTIL FINAL CERTIFICATE OF OCCUPANCY OR PROJECT COMPLETION FORM IS ISSUED BY THIS OFFICE.
No alterations, deletions, additions or modifications of any kind are allowed to this approved set without written permission of this office.
TENNESSEE STATE FIRE MARSHAL'S OFFICE

UNIVERSAL SWAY BRACE



CERTIFICATIONS

FEATURES

- Use for both lateral and longitudinal sway brace applications
- Unique slotted holes provide for easy slip-on installation eliminating loose hardware
- Snap-off bolt head helps enable easy installation and inspection of seismic sway braces
- Works with 1" through 2" brace pipes to reduce inventory
- Meets NFPA®-13 requirements for seismic sway bracing
- FM® Specification Tested
- Meets CEN/TS 17551:2021 requirements for Seismic Sway Bracing
- FM Approved with 12 gauge or thicker Type A solid strut as brace member

SPECIFICATIONS

Finish: Electrogalvanized

Material: Steel

Table 1/2

Catalog Number	Pipe Size	Brace Pipe Size	Width (W)	Angle (a)	A	B

FIELD SET TFM# 21689-A, 21689-B, 21689-C PROJECT# 2025-11-03-04

THESE PLANS AND SPECIFICATIONS ARE REQUIRED TO BE KEPT ON THE JOB SITE UNTIL A FINAL CERTIFICATE OF OCCUPANCY OR PROJECT COMPLETION FORM IS ISSUED BY THIS OFFICE.
No alterations, deletions, additions or modifications of any kind are allowed to this approved set without written permission of this office.
TENNESSEE STATE FIRE MARSHAL'S OFFICE

CSB0100	1"	1 – 2"	1 1/2"	45 °	3 9/16"	1 5/16"
CSB0125	1 1/4"	1 – 2"	1 1/2"	45 °	3 9/16"	1 5/16"
CSB0400	4"	1 – 2"	1 1/2"	45 °	3 9/16"	1 5/16"
CSB0150	1 1/2"	1 – 2"	1 1/2"	45 °	3 9/16"	1 5/16"
CSB0200	2"	1 – 2"	1 1/2"	45 °	3 9/16"	1 5/16"
CSB0250	2 1/2"	1 – 2"	1 1/2"	45 °	3 9/16"	1 5/16"
CSB0300	3"	1 – 2"	1 1/2"	45 °	3 9/16"	1 5/16"
CSB0500	5"	1 – 2"	1 1/2"	45 °	3 9/16"	1 5/16"
CSB1000	10"	1 – 2"	1 1/2"	45 °	3 9/16"	1 5/16"
CSB1200	12"	1 – 2"	1 1/2"	45 °	3 9/16"	1 5/16"
CSB0600	6"	1 – 2"	1 1/2"	45 °	3 9/16"	1 5/16"
CSB0800	8"	1 – 2"	1 1/2"	45 °	3 9/16"	1 5/16"

Table 2/2

Catalog Number	C	D	Certifications
CSB0100	5/8"	5"	cUL, UL, OSHPD/HCAI, FM Approved, Seismic
CSB0125	11/16"	5 1/2"	cUL, UL, OSHPD/HCAI, FM Approved, Seismic
CSB0400	1 1/16"	8 1/2"	cUL, UL, OSHPD/HCAI, FM Approved, Seismic
CSB0150	3/4"	5 3/8"	cUL, UL, OSHPD/HCAI, FM Approved, Seismic
CSB0200	13/16"	6"	cUL, UL, OSHPD/HCAI, FM Approved, Seismic
CSB0250	15/16"	6 3/4"	cUL, UL, OSHPD/HCAI, FM Approved, Seismic
CSB0300	1"	7 3/8"	cUL, UL, OSHPD/HCAI, FM Approved, Seismic
CSB0500	1"	10 1/16"	cUL, UL, OSHPD/HCAI, FM Approved, Seismic
CSB1000	1"	15 3/16"	cUL, UL, OSHPD/HCAI, FM Approved, Seismic
CSB1200	1"	16 7/8"	OSHPD/HCAI, FM Approved, Seismic
CSB0600	1 1/8"	10 7/8"	cUL, UL, OSHPD/HCAI, FM Approved, Seismic
CSB0800	1 1/4"	13"	cUL, UL, OSHPD/HCAI, FM Approved, Seismic

FIELD SET TFM# 21689-A, 21689-B, 21689-C PROJECT# 2025-11-03-04

THESE PLANS AND SPECIFICATIONS ARE REQUIRED TO BE KEPT ON THE JOB SITE UNTIL A FINAL CERTIFICATE OF OCCUPANCY OR PROJECT COMPLETION FORM IS ISSUED BY THIS OFFICE.
No alterations, deletions, additions or modifications of any kind are allowed to this approved set without written permission of this office.
TENNESSEE STATE FIRE MARSHAL'S OFFICE

ADDITIONAL PRODUCT DETAILS

FM® Specification Tested for 1-1/2" to 4" pipe sizes using no hub cast iron pipe.

Load ratings for Sch 10 may also be applied to AS 1074 Medium, GB/T 3091, EN 10255 (Medium or Heavy), and JIS G3452 pipe.

Load ratings for Sch 40 may also be applied to AS 1074 Heavy, GB/T 3091, EN 10255 (Heavy), and JIS G3454 pipe.

Load ratings for FM approved lightwall may also be applied to AS 1074 Lightwall, EN 10255 L,-EN 10220, and GB/T 8163 pipe.

UL Loads

Part Number	Lateral				Longitudinal			
	Sch 10/Sch 40 Service Pipe	Bull Moose Eddy Flow Service Pipe	Wheatland Mega-Flow Service Pipe	Youngstown Fire-Flo Service Pipe	Sch 10/Sch 40 Service Pipe	Bull Moose Eddy Flow Service Pipe	Wheatland Mega-Flow Service Pipe	Youngstown Fire-Flo Service Pipe
CSB0100xx	1800 lb	N/A	N/A	N/A	1000 lb	N/A	N/A	N/A
CSB0125xx	1800 lb	1800 lb	1800 lb	N/A	680 lb	680 lb	680 lb	N/A
CSB0150xx	1800 lb	1800 lb	1800 lb	1800 lb	1000 lb	1000 lb	1000 lb	1000 lb
CSB0200xx	1800 lb	1800 lb	1800 lb	1800 lb	1300 lb	1300 lb	1300 lb	1300 lb
CSB0250xx	1800 lb	1800 lb	1800 lb	1800 lb	1300 lb	1300 lb	1300 lb	1300 lb
CSB0300xx	1800 lb	1800 lb	1800 lb	1800 lb	1400 lb	1400 lb	1400 lb	1400 lb
CSB0400xx	1800 lb	1800 lb	1800 lb	1800 lb	1700 lb	1700 lb	1700 lb	1700 lb
CSB0500xx	1800 lb	N/A	N/A	N/A	1700 lb	N/A	N/A	N/A
CSB0600xx	1800 lb	N/A	1800 lb	N/A	1700 lb	N/A	1700 lb	N/A
CSB0800xx	1800 lb	N/A	N/A	N/A	1700 lb	N/A	N/A	N/A
CSB1000xx	1900 lb	N/A	N/A	N/A	1900 lb	N/A	N/A	N/A
CSB1200xx	N/A	N/A	N/A	N/A	N/A	N/A	N/A	N/A

FIELD SET TFM# 21689-A, 21689-B, 21689-C PROJECT# 2025-11-03-04

THESE PLANS AND SPECIFICATIONS ARE REQUIRED TO BE KEPT ON THE JOB SITE UNTIL A FINAL CERTIFICATE OF OCCUPANCY OR PROJECT COMPLETION FORM IS ISSUED BY THIS OFFICE.
No alterations, deletions, additions or modifications of any kind are allowed to this approved set without written permission of this office.
TENNESSEE STATE FIRE MARSHAL'S OFFICE

FM Loads								
Part Number	Horizontal Capacity per Installation Angle from Vertical							
	Lateral				Longitudinal			
	30° - 44°	45° - 59°	60° - 74°	75° - 90°	30° - 44°	45° - 59°	60° - 74°	75° - 90°
FM Approved Lightwall, Sch 10 and Sch 40 Service Pipes								
CSB0100xx	1,490 lb	2,110 lb	2,580 lb	2,900 lb	1,290 lb	1,240 lb	1,260 lb	1,400 lb
CSB0125xx	1,380 lb	1,960 lb	2,400 lb	2,690 lb	1,290 lb	1,240 lb	1,260 lb	1,400 lb
CSB0150xx	1,380 lb	1,960 lb	2,400 lb	2,690 lb	1,200 lb	1,860 lb	2,180 lb	2,250 lb
CSB0200xx	1,380 lb	1,960 lb	2,400 lb	2,690 lb	1,200 lb	1,820 lb	2,180 lb	2,250 lb
CSB0250xx	1,440 lb	2,030 lb	2,490 lb	2,790 lb	1,320 lb	1,820 lb	2,190 lb	2,500 lb
CSB0300xx	1,390 lb	1,970 lb	2,420 lb	2,710 lb	1,300 lb	1,790 lb	2,190 lb	2,500 lb
CSB0400xx	1,390 lb	1,970 lb	2,420 lb	2,710 lb	1,300 lb	1,790 lb	2,190 lb	2,500 lb
CSB0500xx	1,390 lb	1,970 lb	2,420 lb	2,710 lb	1,300 lb	1,790 lb	2,190 lb	2,500 lb
CSB0600xx	1,460 lb	2,060 lb	2,520 lb	2,830 lb	1,410 lb	1,950 lb	2,350 lb	2,680 lb
0.188" Wall and Sch 40 Service Pipes								
CSB0800xx	1,330 lb	1,880 lb	2,300 lb	2,580 lb	1,400 lb	1,920 lb	2,350 lb	2,640 lb
CSB1000xx	1,330 lb	1,880 lb	2,300 lb	2,580 lb	1,400 lb	1,920 lb	2,350 lb	2,640 lb
CSB1200xx	1,680 lb	2,370 lb	2,910 lb	3,260 lb	1,600 lb	1,860 lb	2,240 lb	2,590 lb

FM Loads with 12 Gauge or Thicker Type A Strut as Brace Member								
Part Number	Horizontal Capacity per Installation Angle from Vertical							
	Lateral				Longitudinal			
	30° - 44°	45° - 59°	60° - 74°	75° - 90°	30° - 44°	45° - 59°	60° - 74°	75° - 90°
FM Approved Lightwall, Sch 10 and Sch 40 Service Pipes								
CSB0100xx	1040 lb	1470 lb	1800 lb	2010 lb	660 lb	580 lb	640 lb	-
CSB0125xx	1040 lb	1470 lb	1800 lb	2010 lb	660 lb	580 lb	640 lb	-
CSB0150xx	1580 lb	2240 lb	2740 lb	3070 lb	1320 lb	1340 lb	1620 lb	-
CSB0200xx	1580 lb	2240 lb	2740 lb	3070 lb	890 lb	1220 lb	1830 lb	-
CSB0250xx	1620 lb	2300 lb	2820 lb	3160 lb	890 lb	1220 lb	1830 lb	-
CSB0300xx	1520 lb	2160 lb	2640 lb	2960 lb	890 lb	1220 lb	1830 lb	-
CSB0400xx	1520 lb	2160 lb	2640 lb	2960 lb	1340 lb	1850 lb	2350 lb	-
CSB0500xx	1520 lb	2160 lb	2640 lb	2960 lb	1340 lb	1850 lb	2350 lb	-
CSB0600xx	1570 lb	2220 lb	2720 lb	3050 lb	1540 lb	1850 lb	2230 lb	-
0.188" Wall and Sch 40 Service Pipes								
CSB0800xx	1570 lb	2220 lb	2720 lb	3050 lb	1270 lb	1750 lb	2160 lb	-
CSB1000xx	1410 lb	2000 lb	2450 lb	2740 lb	1270 lb	1750 lb	2160 lb	-
CSB1200xx	1460 lb	2070 lb	2530 lb	2840 lb	1390 lb	1750 lb	2110 lb	-

FIELD SET TFM# 21689-A, 21689-B, 21689-C PROJECT# 2025-11-03-04

THESE PLANS AND SPECIFICATIONS ARE REQUIRED TO BE KEPT ON THE JOB SITE UNTIL A FINAL CERTIFICATE OF OCCUPANCY OR PROJECT COMPLETION FORM IS ISSUED BY THIS OFFICE.
No alterations, deletions, additions or modifications of any kind are allowed to this approved set without written permission of this office.
TENNESSEE STATE FIRE MARSHAL'S OFFICE

DIAGRAMS

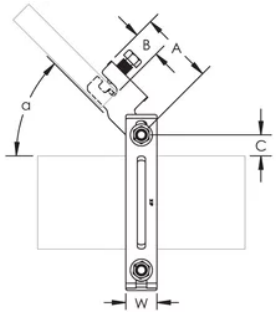

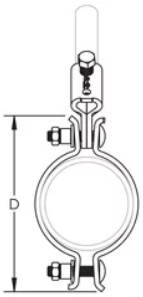

WARNING

nVent products shall be installed and used only as indicated in nVent's product instruction sheets and training materials. Instruction sheets are available at www.nvent.com and from your nVent customer service representative. Improper installation, misuse, misapplication or other failure to completely follow nVent's instructions and warnings may cause product malfunction, property damage, serious bodily injury and death and/or void your warranty.

FIELD SET TFM# 21689-A, 21689-B, 21689-C PROJECT# 2025-11-03-04

North America
+1.800.753.9221
Option 1 – Customer Care
Option 2 – Technical Support

Europe
Netherlands:
+31 800-0200135
France:
+33 800 901 793

Europe
Germany:
800 1890272
Other Countries:
+31 13 5835404

APAC
Shanghai:
+ 86 21 2412 1618/19
Sydney:
+61 2 9751 8500

Our powerful portfolio of brands:
nVent.com CADDY ERICO HOFFMAN RAYCHEM SCHROFF TRACER

© 2023 nVent. All nVent marks and logos are owned or licensed by nVent Services GmbH or its affiliates. All other trademarks are the property of their respective owners.

nVent reserves the right to change specifications without notice.

THESE PLANS AND SPECIFICATIONS ARE REQUIRED TO BE KEPT ON THE JOB SITE UNTIL FINAL CERTIFICATE OF OCCUPANCY OR PROJECT COMPLETION FORM IS ISSUED BY THIS OFFICE.
No alterations, deletions, additions or modifications of any kind are allowed to this approved set without written permission of this office.
TENNESSEE STATE FIRE MARSHAL'S OFFICE

Grooved And Threaded Fittings

FIELD SET TFM# 21689-A, 21689-B, 21689-C PROJECT# 2025-11-03-04

THESE PLANS AND SPECIFICATIONS ARE REQUIRED TO BE KEPT ON THE JOB SITE UNTIL A FINAL CERTIFICATE OF OCCUPANCY OR PROJECT COMPLETION FORM IS ISSUED BY THIS OFFICE.
No alterations, deletions, additions or modifications of any kind are allowed to this approved set without written permission of this office.
TENNESSEE STATE FIRE MARSHAL'S OFFICE

FireLock® Fittings

See Victaulic publication 10.01 for details



FireLock® products comprise a unique system specifically designed for fire protection services. FireLock full-flow elbows and tees feature CAD-developed, hydrodynamic design, affording a shorter center-to-end dimension than standard fittings. A noticeable bulge allows the water to make a smoother turn to maintain similar flow characteristics as standard full flow fittings.

FireLock fittings are designed for use exclusively with Victaulic IPS-sized couplings that have been Listed or Approved for Fire Protection Services. Use of other couplings or flange adapters may result in bolt pad interference.

Victaulic FireLock fittings pressure ratings conform to the ratings of Victaulic FireLock EZ® Style 009N/Style 009H couplings.

MATERIAL SPECIFICATIONS

Fitting: Ductile iron conforming to ASTM A-536, grade 65-45-12.

Fitting Coating:

- Orange enamel.
- Red Enamel in EMEA-I.
- **Optional:** Hot dipped galvanized.

JOB/OWNER

System No. _____

Location _____

CONTRACTOR

Submitted By _____

Date _____

ENGINEER

Spec Sect _____ Para _____

Approved _____

Date _____

FIELD SET TFM# 21689-A, 21689-B, 21689-C PROJECT# 2025-11-03-04

THESE PLANS AND SPECIFICATIONS ARE REQUIRED TO BE KEPT ON THE JOB SITE UNTIL A FINAL CERTIFICATE OF OCCUPANCY OR PROJECT COMPLETION FORM IS ISSUED BY THE STATE OFFICE.
No alterations, deletions, additions or modifications of any kind are allowed to this approved plan without written permission of this office.
TENNESSEE STATE FIRE MARSHAL'S OFFICE

www.victaulic.com

VICTAULIC IS A REGISTERED TRADEMARK OF VICTAULIC COMPANY. © 2012 VICTAULIC COMPANY. ALL RIGHTS RESERVED.

FireLock® Fittings

DIMENSIONS

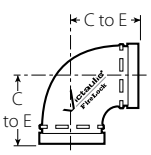

NO. 001

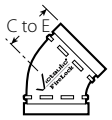

NO. 003

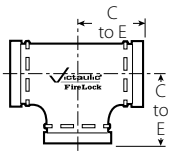

NO. 002

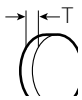

NO. 006

Size		No. 001 90° Elbow		No. 003 45° Elbow		No. 002 Straight Tee		No. 006 Cap	
Nominal Size Inches mm	Actual Outside Diameter Inches mm	C to E Inches mm	Approx. Weight Each Lbs. kg	C to E Inches mm	Approx. Weight Each Lbs. kg	C to E Inches mm	Approx. Weight Each Lbs. kg	Thickness "T" Inches mm	Approx. Weight Each Lbs. kg
1 ¼ 32	1.660 42.4	—	—	—	—	—	—	0.8 21	0.3 0.1
1 ½ 40	1.900 48.3	— —	— —	— —	— —	— —	— —	0.82 21	0.4 0.2
2 50	2.375 60.3	2.75 70	1.7 0.8	2.00 51	1.8 0.8	2.75 70	2.4 1.1	0.88 22	0.6 0.3
2 ½ 65	2.875 73.0	3.00 76	3.1 1.4	2.25 57	2.2 1.0	3.00 76	3.6 1.6	0.88 22	1.0 0.5
76.1 mm	3.000 76.1	3.00 76	3.30 1.5	2.25 57	2.4 1.1	—	—	—	—
3 80	3.500 88.9	3.38 86	4.0 1.8	2.50 64	3.1 1.4	3.38 86	5.3 2.4	0.88 22	1.2 0.5
108 mm	4.250 108.0	4.00 102	5.7 2.6	3.00 76	5.1 2.3	4.00 102	7.5 3.4	—	—
4 100	4.500 114.3	4.00 102	6.7 3.0	3.00 76	5.6 2.5	4.00 102	8.7 3.9	1.00 25	2.4 1.1
5 125	5.563 141.3	4.88 124	12.6 5.7	3.25 83	8.3 3.8	4.88 124	15.7 7.1	1.00 25	4.1 1.9
159 mm	6.250 158.8	5.50 140	12.6 5.7	3.50 89	9.2 4.2	5.50 140	17.9 8.0	—	—
6 150	6.625 168.3	5.50 140	18.3 8.3	3.50 89	11.7 5.3	5.50 140	22.7 10.3	1.00 25	5.9 2.7
8 200	8.625 219.1	6.81 173	25.5 11.6	4.25 108	20.4 9.3	6.94 176	38.7 17.6	1.13 29	12.7 5.8

FIELD SET TFM# 21689-A, 21689-B, 21689-C PROJECT# 2025-11-03-04

PLANS AND SPECIFICATIONS ARE REQUIRED TO BE KEPT ON THE JOB SITE UNTIL A FINAL CERTIFICATE OF OCCUPANCY OR PROJECT COMPLETION FORM IS ISSUED BY THIS OFFICE.
No changes, additions or modifications to these plans are allowed to this approved set without written permission from this office.
TENNESSEE STATE FIRE MARSHAL'S OFFICE

VICTAULIC IS A REGISTERED TRADEMARK OF VICTAULIC COMPANY. © 2012 VICTAULIC COMPANY. ALL RIGHTS RESERVED.

FireLock® Fittings

FLOW DATA

Size		Frictional Resistance Equivalent Feet/meters of Straight Pipe †			
Nominal Size Inches mm	Actual Outside Diameter Inches mm	Elbows		No. 002 Straight Tee	
		No. 001 90° Elbow	No. 003 45° Elbow	Branch	Run
1 ¼ 32	1.660 42.4	— —	— —	— —	— —
1 ½ 40	1.900 48.3	— —	— —	— —	— —
2 50	2.375 60.3	3.5 1.1	1.8 0.5	8.5 2.6	3.5 1.1
2 ½ 65	2.875 73.0	4.3 1.3	2.2 0.7	10.8 3.3	4.3 1.3
76.1 mm	3.000 76.1	4.5 1.4	2.3 0.7	11.0 3.4	4.5 1.4
3 80	3.500 88.9	5.0 1.5	2.6 0.8	13.0 4.0	5.0 1.5
108 mm	4.250 108.0	6.4 2.0	3.2 0.9	15.3 4.7	6.4 2.0
4 100	4.500 114.3	6.8 2.1	3.4 1.0	16.0 4.9	6.8 2.1
5 125	5.563 141.3	8.5 2.6	4.2 1.3	21.0 6.4	8.5 2.6
159 mm	6.250 158.8	9.4 2.9	4.9 1.5	25.0 7.6	9.6 2.9
6 150	6.625 168.3	10.0 3.0	5.0 1.5	25.0 7.6	10.0 3.0
8 200	8.625 219.1	13.0 4.0	5.0 1.5	33.0 10.1	13.0 4.0

† The flow data listed is based upon the pressure drop of Schedule 40 pipe.

FIELD SET TFM# 21689-A, 21689-B, 21689-C PROJECT# 2025-11-03-04

THESE PLANS AND SPECIFICATIONS ARE REQUIRED TO BE KEPT ON THE JOB OR IN THE FINAL CERTIFICATE OF OCCUPANCY OR PROJECT COMPLETION FORM IS ISSUED BY THE OFFICE.
No additions, deletions, additions or modifications of any kind are allowed to this approved plan without written permission of this office.
TENNESSEE STATE FIRE MARSHAL'S OFFICE

VICTAULIC IS A REGISTERED TRADEMARK OF VICTAULIC COMPANY. © 2012 VICTAULIC COMPANY. ALL RIGHTS RESERVED.

FireLock® Fittings

GENERAL NOTES

NOTE: When assembling FireLock EZ couplings onto end caps, take additional care to make certain the end cap is fully seated against the gasket end stop. For FireLock EZ Style 009N/009H couplings, use FireLock No. 006 end caps containing the "EZ" marking on the inside face or No. 60 end caps containing the "QV EZ" marking on the inside face. Non-Victaulic end cap products shall not be used with Style 009/009V/009H couplings.

WARRANTY

Refer to the Warranty section of the current Price List or contact Victaulic for details.

NOTE

This product shall be manufactured by Victaulic or to Victaulic specifications. All products to be installed in accordance with current Victaulic installation/assembly instructions. Victaulic reserves the right to change product specifications, designs and standard equipment without notice and without incurring obligations.

FIELD SET TFM# 21689-A, 21689-B, 21689-C PROJECT# 2025-11-03-04

VICTAULIC IS A REGISTERED TRADEMARK OF VICTAULIC COMPANY. © 2012 VICTAULIC COMPANY. ALL RIGHTS RESERVED.

PLANS AND SPECIFICATIONS ARE REQUIRED TO BE KEPT ON THE JOB SITE UNTIL A FINAL CERTIFICATE OF OCCUPANCY OR PROJECT COMPLETION FORM IS ISSUED BY THIS OFFICE.
No alterations, additions or modifications of any kind are allowed to this approved set without written permission of this office.
TENNESSEE STATE FIRE MARSHAL'S OFFICE

Building connections that last™

ASC Engineered Solutions

Ductile Iron Threaded Fittings
Specifications



FIELD SET TFM# 21689-A, 21689-B, 21689-C PROJECT# 2025-11-03-04

ALL PLANS AND SPECIFICATIONS ARE REQUIRED TO BE KEPT ON THE JOB UNTIL A FINAL CERTIFICATE OF OCCUPANCY OR PROJECT COMPLETION FORM IS ISSUED BY THIS OFFICE.
No modifications, deletions, additions or modifications of any kind are allowed to this approved set without written permission from this office.
FIRE MARSHAL'S OFFICE
TENNESSEE STATE

SCI
SCI
An ASC Engineered Solution

Ductile Iron Threaded Fittings

Specifications

- SCI® branded fittings are UL Listed and FM Approved at ***500 psi***
- Rated to 300 psi WSP
- Ductile iron castings conform to ASTM A536
- Fitting dimensions conform to ASME B16.3
- Bushings and plugs conform to ASME B16.14
- All fittings are 100% air tested
- NPT threads on all fittings conform to ASME B1.20.1
- Independent lab verification that fittings meet applicable chemical & mechanical properties
- Manufacturing facilities are ISO 9001:2008 and ISO 14001
- ProPak™ Packaging

c UL us LISTED

FM APPROVED

Temperature Degrees F	Working Pressure, Non-Shock psig Class 300 Threaded Fittings
-20 to 100	500
150	500
200	480
250	460
300	440
350	420
400	400
450	380
500	360
550	340
600	320
650	300



SCI ProPak™ System

FIELD SET TFM# 21689-A, 21689-B, 21689-C PROJECT# 2025-11-03-04

THESE PLANS AND SPECIFICATIONS ARE REQUIRED TO BE KEPT ON THE JOB SITE UNTIL A FINAL CERTIFICATE OF OCCUPANCY OR PROJECT COMPLETION FORM IS ISSUED BY THIS OFFICE.
No alterations, deletions, additions or modifications of any kind are allowed to this approved set without written permission of this office.
TENNESSEE STATE FIRE MARSHAL'S OFFICE

Fig. 35E 3 – 90° Elbow



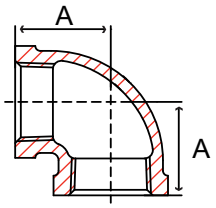

Size in	Part Number	A in	Packing		Weight lb
			Inner	Master	
1/2	35E 3004	1.13	100	200	0.2
3/4	35E 3006	1.31	70	140	0.3
1	35E 3010	1.50	40	80	0.5
1-1/4	35E 3012	1.75	25	50	0.8
1-1/2	35E 3014	1.94	18	36	1.1
2	35E 3020	2.25	10	20	1.8
2-1/2	35E 3024	2.70	4	8	3.2

Fig. 35RE3 – 90° Reducing Elbow



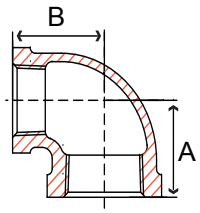

Size in	Part Number	A in	B in	Packing		Weight lb
				Inner	Master	
3/4 x 1/2	35RE3006004	1.20	1.22	80	160	0.3
1 x 1/2	35RE3010004	1.26	1.36	70	140	0.4
1 x 3/4	35RE3010006	1.38	1.45	50	100	0.4
1-1/4 x 1/2	35RE3012004	1.34	1.53	35	70	0.5
1-1/4 x 3/4	35RE3012006	1.45	1.63	35	70	0.6
1-1/4 x 1	35RE3012010	1.58	1.67	30	60	0.7
1-1/2 x 1/2	35RE3014004	1.52	1.75	30	60	0.6
1-1/2 x 3/4	35RE3014006	1.52	1.75	25	50	0.7
1-1/2 x 1	35RE3014010	1.65	1.80	20	40	0.8
1-1/2 x 1-1/4	35RE3014012	1.82	1.88	18	36	1.0
2 x 1/2	35RE3020004	1.60	1.97	18	36	1.0
2 x 3/4	35RE3020006	1.60	1.97	18	36	1.0
2 x 1	35RE3020010	1.73	2.02	16	32	1.2
2 x 1-1/4	35RE3020012	1.90	2.10	12	24	1.3
2 x 1-1/2	35RE3020014	2.02	2.16	10	20	1.5
2-1/2 x 1-1/2	35RE3024014	2.16	2.51	6	12	2.2
2-1/2 x 2	35RE3024020	2.39	2.60	6	12	2.5

Fig. 35F 3 – 45° Elbow



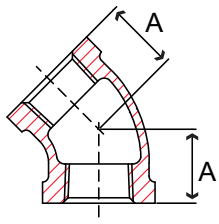

Size in	Part Number	A in	Packing		Weight lb
			Inner	Master	
1/2	35F 3004	0.88	150	300	0.2
3/4	35F 3006	0.98	80	160	0.3
1	35F 3010	1.13	40	80	0.5
1-1/4	35F 3012	1.29	25	50	0.7
1-1/2	35F 3014	1.44	20	40	1.0
2	35F 3020	1.69	10	20	1.6
2-1/2	35F 3024	1.95	4	8	2.7

Fig. 35T 3 – Tee



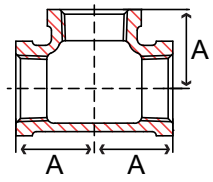

Size in	Part Number	A in	Packing		Weight lb
			Inner	Master	
1/2	35T 3004	1.13	80	160	0.3
3/4	35T 3006	1.31	30	60	0.5
1	35T 3010	1.50	25	50	0.7
1-1/4	35T 3012	1.75	10	20	1.1
1-1/2	35T 3014	1.94	10	20	1.5
2	35T 3020	2.25	6	12	2.4
2-1/2	35T 3024	2.70	4	8	4.3

C UL US LISTED FM APPROVED

Fig. 35RT3 – Reducing Tee

Size in	Part Number	A in	B in	C in	Packing Inner	Packing Master	Weight lb
3/4 x 1/2	35RT3006004	1.20	1.20	1.22	60	120	0.4
1 x 1/2	35RT3010004	1.26	1.26	1.36	30	60	0.6
1 x 1/2 x 1	35RT3010004010	1.50	1.36	1.50	30	60	0.6
1 x 3/4	35RT3010006	1.38	1.38	1.45	25	50	0.6
1 x 3/4 x 3/4	35RT3010006006	1.38	1.31	1.45	35	70	0.6
1 x 3/4 x 1	35RT3010006010	1.50	1.45	1.50	25	50	0.7
1-1/4 x 1/2	35RT3012004	1.34	1.34	1.53	20	40	0.8
1-1/4 x 1/2 x 1-1/4	35RT3012004012	1.75	1.53	1.75	25	50	0.9
1-1/4 x 3/4	35RT3012006	1.45	1.45	1.62	15	30	0.9
1-1/4 x 3/4 x 1-1/4	35RT3012006012	1.75	1.62	1.75	20	40	1.0
1-1/4 x 1	35RT3012010	1.58	1.58	1.67	15	30	1.0
1-1/4 x 1 x 1/2	35RT3012010004	1.34	1.26	1.53	25	50	0.7
1-1/4 x 1 x 3/4	35RT3012010006	1.45	1.38	1.63	20	40	0.8
1-1/4 x 1 x 1	35RT3012010010	1.58	1.50	1.69	20	40	0.9
1-1/4 x 1 x 1-1/4	35RT3012010012	1.75	1.69	1.75	15	30	1.0
1-1/2 x 1/2	35RT3014004	1.41	1.41	1.66	16	32	1.0
1-1/2 x 1/2 x 1-1/4	35RT3014004012	1.81	1.56	1.88	24	48	1.1
1-1/2 x 1/2 x 1-1/2	35RT3014004014	1.94	1.66	1.94	12	24	1.2
1-1/2 x 3/4	35RT3014006	1.52	1.52	1.75	16	32	1.1
1-1/2 x 3/4 x 1-1/4	35RT3014006012	1.94	1.66	1.88	20	40	1.1
1-1/2 x 3/4 x 1-1/2	35RT3014006014	1.94	1.75	1.94	18	36	1.2
1-1/2 x 1	35RT3014010	1.65	1.65	1.80	12	24	1.2
1-1/2 x 1 x 1/2	35RT3014010004	1.44	1.25	1.69	20	40	0.8
1-1/2 x 1 x 3/4	35RT3014010006	1.50	1.44	1.75	16	32	0.9
1-1/2 x 1 x 1	35RT3014010010	1.65	1.50	1.80	16	32	1.0
1-1/2 x 1 x 1-1/4	35RT3014010012	1.82	1.67	1.88	12	24	1.2
1-1/2 x 1 x 1-1/2	35RT3014010014	1.94	1.80	1.94	12	24	1.3
1-1/2 x 1-1/4	35RT3014012	1.82	1.82	1.88	12	24	1.4
1-1/2 x 1-1/4 x 1/2	35RT3014012004	1.41	1.34	1.66	16	32	0.9
1-1/2 x 1-1/4 x 3/4	35RT3014012006	1.52	1.45	1.75	16	32	1.0
1-1/2 x 1-1/4 x 1	35RT3014012010	1.65	1.58	1.80	16	32	1.1
1-1/2 x 1-1/4 x 1-1/4	35RT3014012012	1.82	1.75	1.88	14	28	1.3
1-1/2 x 1-1/4 x 1-1/2	35RT3014012014	1.94	1.88	1.94	14	28	1.4
2 x 1/2	35RT3020004	1.49	1.49	1.88	10	20	1.5
2 x 3/4	35RT3020006	1.60	1.60	1.97	10	20	1.6
2 x 1	35RT3020010	1.73	1.73	2.02	8	16	1.7
2 x 1 x 2	35RT3020010020	2.25	2.02	2.25	8	16	1.9
2 x 1-1/4	35RT3020012	1.90	1.90	2.10	8	16	1.9
2 x 1-1/4 x 2	35RT3020012020	2.25	2.10	2.25	8	16	2.0
2 x 1-1/2	35RT3020014	2.02	2.02	2.16	8	16	2.1
2 x 1-1/2 x 1/2	35RT3020014004	1.49	1.41	1.88	10	20	1.3
2 x 1-1/2 x 3/4	35RT3020014006	1.60	1.52	1.97	10	20	1.4
2 x 1-1/2 x 1	35RT3020014010	1.73	1.65	2.02	8	16	1.5
2 x 1-1/2 x 1-1/4	35RT3020014012	1.90	1.82	2.10	8	16	1.7
2 x 1-1/2 x 1-1/2	35RT3020014014	2.02	1.94	2.16	8	16	1.8

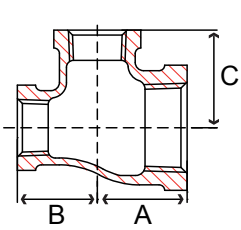



Fig. 35BT3 – Bull Head Tee

Size in	Part Number	A in	B in	C in	Packing Inner	Packing Master	Weight lb
3/4 x 1	35BT3006010	1.45	1.45	1.37	30	60	0.6
1 x 1-1/4	35BT3010012	1.67	1.67	1.58	20	40	0.9
1 x 1-1/2	35BT3010014	1.80	1.80	1.65	15	30	1.0
1-1/4 x 1 x 1-1/2	35BT3012010014	1.88	1.80	1.82	15	30	1.2
1-1/4 x 1-1/2	35BT3012014	1.88	1.88	1.82	15	30	1.3
1-1/4 x 2	35BT3012020	2.10	2.10	1.90	10	20	1.6
1-1/2 x 1-1/4 x 2	35BT3014012020	2.16	2.10	2.02	10	20	1.8
1-1/2 x 2	35BT3014020	2.16	2.16	2.02	8	16	1.8

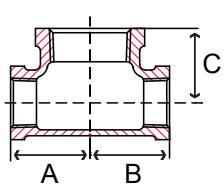



Fig. 35CP3 – Straight Coupling with Ribs



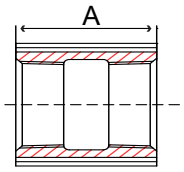

Size in	Part Number	A in	Packing Inner	Packing Master	Weight lb
1/2	35CP3004	1.38	200	400	0.1
3/4	35CP3006	1.63	100	200	0.2
1	35CP3010	1.75	60	120	0.4
1-1/4	35CP3012	2.00	35	70	0.5
1-1/2	35CP3014	2.19	25	50	0.7
2	35CP3020	2.62	15	30	1.2
2-1/2	35CP3024	3.00	9	18	2.2

Fig. 35RC3 – Hex Reducing Coupling



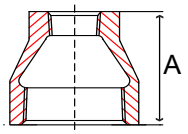

Size in	Part Number	A in	Packing Inner	Packing Master	Weight lb
1 x 1/2	35RC3010004	1.69	80	160	0.3
1 x 3/4	35RC3010006	1.69	60	120	0.4
1-1/4 x 3/4	35RC3012006	2.06	40	80	0.6
2 x 1 (not hex)	35RC3020010	2.81	20	40	1.0

Fig. 35HB3 – Hex Bushing



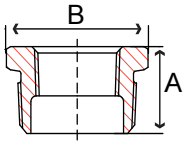

Size in	Part Number	A in	B in	Packing Inner	Packing Master	Weight lb
1 x 1/2	35HB3010004	1.06	1.40	180	360	0.2
1 x 3/4	35HB3010006	1.06	1.40	180	360	0.1
1-1/4 x 1	35HB3012010	1.19	1.80	90	180	0.2
1-1/2 x 1	35HB3014010	1.25	1.95	75	150	0.4
1-1/2 x 1-1/4	35HB3014012	1.25	1.95	75	150	0.3
2 x 1	35HB3020010	1.38	2.55	40	80	0.6
2 x 1-1/4	35HB3020012	1.38	2.55	40	80	0.6
2 x 1-1/2	35HB3020014	1.38	2.55	40	80	0.6

Fig. 35SP3 – Square Head Plug



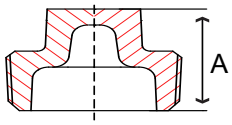

Size in	Part Number	A in	Packing Inner	Packing Master	Weight lb
1/2	35SP3004	0.94	600	1200	0.07
3/4	35SP3006	1.12	350	700	0.1
1	35SP3010	1.25	200	400	0.1
1-1/4	35SP3012	1.37	100	200	0.3
1-1/2	35SP3014	1.44	80	160	0.4
2	35SP3020	1.50	45	90	0.6

Fig. 35U 3 – Union with Brass Seat



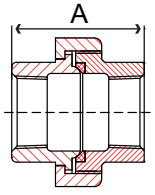

Size in	Part Number	A in	Packing Inner	Packing Master	Weight lb
1	35U 3010	2.19	20	40	1.0
1-1/4	35U 3012	2.50	15	30	1.2
1-1/2	35U 3014	2.62	10	20	1.7
2	35U 3020	3.12	6	12	2.4

Fig. 35X 3 – Cross

Size in	Part Number	A in	Packing		Weight lb
			Inner	Master	
1	35X 3010	1.50	20	40	0.9
1-1/4	35X 3012	1.75	12	24	1.4
1-1/2	35X 3014	1.94	8	16	1.8
2	35X 3020	2.25	6	12	2.8

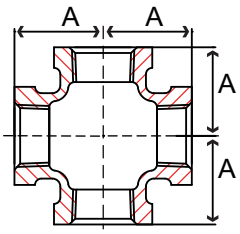



Fig. 35RX3 – Reducing Cross

Size in	Part Number	A in	B in	Packing		Weight lb
				Inner	Master	
1-1/4 x 1	35RX3012010	1.67	1.58	15	30	1.2
1-1/2 x 1	35RX3014010	1.80	1.65	12	24	1.4
2 x 1	35RX3020010	2.02	1.73	8	16	2.0

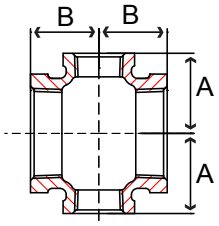



Fig. 35C 3 – Cap

Size in	Part Number	A in	Packing		Weight lb
			Inner	Master	
1/2	35C 3004	0.87	300	600	0.1
3/4	35C 3006	0.97	200	400	0.1
1	35C 3010	1.16	110	220	0.2
1-1/4	35C 3012	1.28	70	140	0.4
1-1/2	35C 3014	1.33	50	100	0.5
2	35C 3020	1.45	25	50	0.8
2-1/2	35C 3024	1.70	18	36	1.6

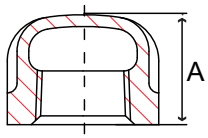



Fig. 35BC3 – Beam Clamp

Size in	Part Number	A in	Packing		Weight lb
			Inner	Master	
3/8	35BC3003	0.75	100	200	0.3
1/2	35BC3004	0.75	80	160	0.5

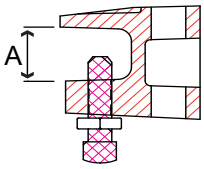



Steel Piping, CPVC Piping & CPVC Fittings

FIELD SET TFM# 21689-A, 21689-B, 21689-C PROJECT# 2025-11-03-04

THESE PLANS AND SPECIFICATIONS ARE REQUIRED TO BE KEPT ON THE JOB SITE UNTIL A FINAL CERTIFICATE OF OCCUPANCY OR PROJECT COMPLETION FORM IS ISSUED BY THIS OFFICE.
No alterations, deletions, additions or modifications of any kind are allowed to this approved set without written permission of this office.
TENNESSEE STATE FIRE MARSHAL'S OFFICE

Schedule 10 and Schedule 40

FM Approved and UL Listed Sprinkler Pipe

Bull Moose Tube Company is a recognized producer of quality pipe products. Our Schedule 10 and Schedule 40 are FM Approved and UL Listed (for U.S. and Canada), even though these products do not require separate approvals and listings. Bull Moose Tube made the decision to have them approved and listed for your peace of mind. Our Sch. 10 and Sch. 40 have been through the same rigorous testing as our other fine pipe products.

Bull Moose Tube's Sch. 10 and Sch. 40 pipes are made to ASTM A135 and ASTM A795. These products are typically supplied with our protective coating but can be supplied without the coating so they can be hot-dip galvanized to meet FM requirements for use in dry systems in accordance with the zinc coating specifications of ASTM A795 or ASTM A53.

Schedule 10 Pipe

Nominal Pipe Size (in)	Nominal O.D. (in)	Nominal I.D. (in)	Weight/Ft	Bundle Size
1	1.315	1.097	1.41 lbs/ft	91
1 1/4	1.660	1.442	1.81 lbs/ft	61
1 1/2	1.900	1.682	2.09 lbs/ft	61
2	2.375	2.157	2.64 lbs/ft	37
2 1/2	2.875	2.635	3.53 lbs/ft	30
3	3.500	3.260	4.34 lbs/ft	19
4	4.500	4.260	5.62 lbs/ft	19

Schedule 40 Pipe

Nominal Pipe Size (in)	Nominal O.D. (in)	Nominal I.D. (in)	Weight/Ft	Bundle Size
1	1.315	1.049	1.68 lbs/ft	70
1 1/4	1.660	1.380	2.27 lbs/ft	51
1 1/2	1.900	1.610	2.72 lbs/ft	44
2	2.375	2.067	3.66 lbs/ft	30
2 1/2	2.875	2.468	5.80 lbs/ft	30
3	3.500	3.068	7.58 lbs/ft	19
4	4.500	4.260	10.80 lbs/ft	19

PIPE PREPARATION

For proper operation, all pipe surfaces should be cleaned prior to installation. In order to provide a leak-tight seat for the gasket, pipe surfaces should be free from indentations and projections from the end of the pipe to the groove. All loose paint, scale, dirt, chips, grease, and rust must be removed prior to installation. Failure to take these important steps may result in improper coupling assembly, causing leakage. Also, check the manufacturer's instructions for the specific fitting used.

BULL MOOSE TUBE COMPANY
A CAPARO company

1819 Clarkson Road
Chesterfield, MO 63017
(800) 325-4467
FAX: (636) 537-2645
www.bullmoosetube.com
e-mail: sales@bullmoosetube.com

For additional information, contact your salesperson today at (800) 325-4467 or (636) 537-2600 in the USA, or from Canada call (800) 882-4666

c UL us LISTED

FM APPROVED

THESE PLANS AND SPECIFICATIONS ARE REGISTERED TO BE KEPT IN THE CONSTRUCTION OF THE PROJECT COMPLETION CERTIFICATE ISSUED BY THE OFFICE. No alterations, deletions, additions or modifications of any kind are allowed to this approved set without written permission of this office. TENNESSEE STATE FIRE MARSHAL'S OFFICE

All information contained herein is accurate as known at the time of publication. Bull Moose Tube reserves the right to change product specifications without notice and without incurring obligation.

FIELD SET TFM# 21689-A, 21689-B, 21689-C PROJECT# 2025-11-03-04

FlameGuard®
CPVC FIRE SPRINKLER PRODUCTS

FG-2-1221

Complete System of Pipe, Fittings & Solvent Cement
Corrosion Resistant • Superior Flow • Ease of Installation

Spears® **FlameGuard®** CPVC Fire Sprinkler Products provide a cost effective alternative to metal systems with advantages of high corrosion resistance, improved system hydraulics, ease of installation and quick assembly with common tools. CPVC Fire Sprinkler Systems are based on proven products that have been in continuous service for over 40 years. Spears® **FlameGuard®** products are approved by UL®, FM® Global, LPCB and Certified by NSF International for potable water use. Check local codes for restrictions and limitations.



Corrosion Resistant CPVC Material Does Not Sustain Biological Growth

Unlike metal systems, **FlameGuard®** CPVC products never rust, scale or pit and do not sustain biological growth - a cause of Microbiologically Influenced Corrosion (MIC) which can destroy metal fire sprinkler systems from the inside out.

Superior Flow Characteristics for Lower Friction Losses

The smooth-wall interior surfaces of **FlameGuard®** CPVC systems result in reduced friction loss over metal systems. The design flow characteristics remain constant throughout the life of the product because there is no interior corrosion in the system due to microbiological activity.

Pressure Rated to 175 psi (1.21 Mpa) (1200kpa) @ 150°F (66°C)

FlameGuard® CPVC Products are produced in combinations of Schedule 40 and Schedule 80 Fitting configurations con-forming to ASTM F 438 or F 439 standards and **FlameGuard®** SDR 13.5 CPVC Fire Sprinkler Pipe conforming to ASTM F 442 standards. UL® and FM® Rated working pressure is 175 psi (1.21 Mpa) (1200kpa) @ 150°F (66°C) (LPCB rated to 120°F) (49°C).

Easy Installation for Lower Costs

FlameGuard® CPVC system installations significantly reduce costs over conventional metal piping by virtually eliminating prefabrication. Systems can be fully installed on site using solvent cement joining methods.

UL® Listed for U.S. and Canada in NFPA 13, 13R & 13D Systems

FlameGuard® CPVC Fire Sprinkler Products are UL® listed for U.S. and Canada applications for Light Hazard occupancies as defined in NFPA 13, Residential occupancies up to and including 4-stories as defined in NFPA 13R, and Residential occupancies for one and two family dwellings and manufactured homes as defined in NFPA 13D. Consult Spears® **FlameGuard®** CPVC Fire Sprinkler Products Installation Instructions and NFPA Standards for additional applications including air plenum, system risers, concealed, exposed, underground, combustable attic, garage, basement and low pressure dry piping installations.

Full Limited Lifetime Warranty

FlameGuard® CPVC Fire Sprinkler Products carry a limited lifetime warranty against defects in material or workmanship. Consult Spears® warranty for additional details.

PROGRESSIVE PRODUCTS FROM SPEARS®
INNOVATION & TECHNOLOGY
Visit our website at www.spearsmfg.com

LPS1260 Cert/LBCB ref. 293b

FIELD SET TFM# 21689-A, 21689-B, 21689-C PROJECT# 2025-11-03-04

Spears® FlameGuard®
The Leader in Innovative CPVC Fire Sprinkler System Products

Pioneer in Molded-in Metal Insert Head Adapters Patented

Spears® pioneered the development of the **FlameGuard®** molded-in-place metal thread insert for connection of sprinkler heads to CPVC fire sprinkler systems, plus Metal FIPT threaded female adapters for metal-to-plastic transitions.



Developed the Special Reinforced (SR) Head Adapters Patented

Spears® **FlameGuard®** continuous improvement program developed the technology to produce a superior patented plastic threaded fitting - the Special Reinforced (SR) Design. This unique design incorporates a patented thermoplastic compression process that equalizes stresses generated by tapered thread joint make-up. All CPVC plastic body and threads provide a more uniform construction and improved corrosion resistance.



Lead Free

Revolutionary Gasket Sealed Head Adapter Choices Patented

- Requires NO Thread Sealants
- Prevents Over Tightening
- Eliminates Stress
- Provides Easy Frame Alignment

Spears® revolutionary Gasket Sealed Head Adapters feature an elastomer gasket seal at the base of the threads. The gasket seal allows a modified thread design that eliminates radial stress and associated problems typical with tapered thread joint make up. Choose from **TorqueSafe™** design with rotating brass thread insert, **SofTorque™** design with Special Reinforced (SR) plastic threads and compressible gasket or **QuickTorque™** with similar features plus brass threads.



TorqueSafe™, SofTorque™ & QuickTorque™ Fittings
Lead Free

Full Assortment of Specialty Products & Fitting Configurations

Spears® **FlameGuard®** products provide the specialty fittings needed in today's fire sprinkler systems. The **GripLoc™** Elbow, Tee, Cap and Coupling and **GripLoc™** Repair Coupling for quick no-cement repairs; the Adjustable Drop Nipple for fine-tuning to finished ceiling height; and Ringed Head Adapter for ease of locating during installation. Plus a full assortment of fittings including Grooved Coupling Adapters, Unions and Flanges sizes 3/4" through 3".



GripLoc™ Elbow, Tee, Cap, Coupling & Repair Couplings
Lead Free

Complete Size Range of CPVC Pipe

Spears® FlameGuard® CPVC Fire Sprinkler Pipe is available in sizes 3/4" to 3" and conforms to ASTM F 442 standard for SDR 13.5 CPVC pipe.



Spears® Solvent Cements & Thread Sealant

FlameGuard® products should be installed using Spears® FS-5 One-Step Solvent Cement. For threaded joints, use Spears® **BLUE 75™** Thread Sealant that has been tested for compatibility with **FlameGuard®** CPVC Fire Sprinkler Products. Spears® **TorqueSafe™, SofTorque™** and **QuickTorque™** Gasket Sealed Adapter requires no sealant. Consult sprinkler head manufacturer prior to use.

UL 2818 Performance Certification

Certified by Underwriters Laboratories (UL®) for conformance to UL 2818 Certification Program For Chemical Emissions For Building Materials, Finishes And Furnishings. This GREENGUARD GOLD Certification provides eligibility for LEED® credits when installing **FlameGuard®** in a green building project.

GREENGUARD
PRODUCT CERTIFIED FOR LOW CHEMICAL EMISSIONS
UL.COM/GG
UL 2818

© Copyright 2021 Spears® Manufacturing Company. All Rights Reserved. Printed in the United States of America 11/21.

FIELD SET TFM# 21689-A, 21689-B, 21689-C PROJECT# 2025-11-03-04

FlameGuard®
CPVC FIRE SPRINKLER PIPING PRODUCTS

TECHNICAL INFORMATION
WEIGHTS & DIMENSIONS

November 2015

SUPERSEDES ALL PREVIOUS EDITIONS

SPEARS MANUFACTURING COMPANY
Since 1969
SYLMAR, CALIFORNIA

LPCB LOSS PREVENTION CERTIFICATION BOARD
UKAS MANAGEMENT SYSTEMS 007

Assessed to ISO 9001: 2008
Certificate number 293

Visit our web site:
www.spearsmfg.com

FG-4-1115

FIELD SET TFM# 21689-A, 21689-B, 21689-C PROJECT# 2025-11-03-04

THESE PLANS AND SPECIFICATIONS ARE REQUIRED TO BE KEPT ON THE JOB SITE UNTIL A FINAL CERTIFICATE OF OCCUPANCY OR PROJECT COMPLETION FORM IS ISSUED BY THIS OFFICE.
No alterations, deletions, additions or modifications of any kind are allowed to this approved set without written permission of this office.
TENNESSEE STATE FIRE MARSHAL'S OFFICE

The information contained in this section is based on current information and Product design at the time of publication and is subject to change without notification. Our ongoing commitment to product improvement may result in some variation. No representations, guarantees or warranties of any kind are made as to its accuracy, suitability for particular applications or results to be obtained therefrom. For verification of technical data or additional information not contained herein, please contact Spears® Technical Services Department [West Coast: (818) 364-1611—East Coast: (678) 985-1263].

General Information

RECOMMENDATIONS FOR INSTALLERS AND USERS:

Plastic piping systems should be **ENGINEERED, INSTALLED** and **OPERATED** in accordance with **ESTABLISHED DESIGN AND ENGINEERING STANDARDS AND PROCEDURES** for plastic piping systems. Suitability for the intended service application should be determined by the installer and/or user prior to installation of a plastic piping system. All Installation and maintenance personnel should be trained in the proper handling and installation requirements and precautions of plastic piping systems. **PRIOR TO ASSEMBLY, all piping system components should be inspected for damage or irregularities. Mating components should be checked to assure that tolerances and engagements are compatible. Do not use any components that appear irregular or do not fit properly. Contact the appropriate manufacturer of the component product in question to determine usability. Consult all applicable codes and regulations for compliance prior to installation.**

Installation must be made in accordance with Spears® Manufacturing Company
FlameGuard® CPVC Fire Sprinkler Piping Products Installation Instructions - FG-3

NOTE — Individual or group instruction in correct solvent welding procedures is available by contacting your local distributor or your servicing Spears® Regional Distribution Center.

SOLVENT CEMENT CONNECTIONS — Spears® Manufacturing Company recommends the use of Spears® FS-5 One Step solvent cement for joining Spears® products. Use of solvent cementing products not approved for CPVC fire sprinkler systems, or failure to follow installation instructions will automatically void the warranty.

THREADED CONNECTION — Spears® Manufacturing Company recommends the use of Spears® **BLUE 75™** Thread Sealant. This product has been tested by Spears® and the sealant manufacturer for compatibility with the Spears® CPVC fire sprinkler products. Consult the sprinkler head manufacturer before using this product. **WARNING: OTHER PIPE JOINT COMPOUNDS OR PASTES MAY CONTAIN SUBSTANCES THAT COULD CAUSE STRESS CRACKING IN THE CPVC OR OTHER FITTING COMPONENTS.** Care must be taken to avoid over torquing - generally 1 to 2 turns beyond finger tight is all that is required to make up a threaded connection. Factory testing has indicated 10-25 ft. lbs. of torque is adequate to obtain a leak free seal.

GASKET SEALED THREAD CONNECTIONS — This type of connection can only be made with Spears® TorqueSafe™, SofTorque™ or QuickTorque™ style Gasket Sealed Female Sprinkler Adapters. DO NOT USE ANY TYPE OF THREAD SEALANT WHEN INSTALLING THIS TYPE OF ADAPTER. Tape or paste may impair proper sealing and function. Testing has shown that hand tight until snug for the TorqueSafe™ adapter and finger tight plus 1-turn is all that is needed to seal this special connection. Sprinkler heads in these specialty fittings can then be additionally tightened clockwise to bring sprinkler frames into desired alignment without stressing the fitting. See specific adapter instructions in package for details.

GripLoc™ CONNECTIONS — This type of connection can only be made with Spears® GripLoc™ Couplings or Repair Couplings. DO NOT USE ANY TYPE OF SOLVENT CEMENT OR SEALANT WHEN INSTALLING THIS TYPE OF CONNECTION. Uses an internal stainless steel gripper ring with an internal elastomer gasket seal. Connection allows immediate system use. See specific instructions in package for details.
Installation Training Available - Contact Spears® Technical Services for Details

FlameGuard® Products must be installed in accordance with Spears® FlameGuard® CPVC Fire Sprinkler Piping Products Installation Instructions, National Fire Protection Association Standards 13, 13R, 13D, and in accordance with local codes. Code requirements and field conditions may differ. It is the responsibility of the installing contractor to insure that the product is suitable to meet these requirements.

Dimension Reference

G = (LAYING LENGTH) Intersection of center lines to bottom of socket/thread; 90° elbows, tees, crosses; ± 1/32 inch.
H = Intersection of center lines to face of fitting; 90° elbows tees, crosses; ± 1/32 inch.
J = Intersection of center lines to bottom of socket/thread; 45° elbows; ± 1/32 inch
L = Overall length of fittings; ± 1/16 inch.
M = Outside diameter of socket/thread hub; ± 1/16 inch.
N = Socket bottom to socket bottom; couplings; ± 1/16 inch.
Q = Width of flats; ±1/16 inch.
W = Height of cap; ± 1/16 inch.

CPVC FIRE SPRINKLER PIPE SDR 13.5 (ASTM F 442)

Part Number	Nominal Size		Average O.D.		Average I.D.		Approx. Weight Lbs./Ft.
	Inches	(mm)	Inches	(mm)	Inches	(mm)	
CP-007	3/4	(19.1)	1.050	(26.7)	.874	(22.5)	0.168
CP-010	1	(25.4)	1.315	(33.4)	1.101	(28.2)	0.262
CP-012	1-1/4	(31.8)	1.660	(42.2)	1.394	(35.6)	0.418
CP-015	1-1/2	(38.1)	1.900	(48.3)	1.598	(40.7)	0.548
CP-020	2	(50.8)	2.375	(60.3)	2.003	(50.9)	0.859
CP-025	2-1/2	(63.5)	2.875	(73.0)	2.423	(61.5)	1.257
CP-030	3	(76.2)	3.500	(88.9)	2.950	(75.0)	1.867

"Lead Free" low lead certification – unless other wise specified, all Spears® FlameGuard® fittings specified here-in are certified by NSF International to ANSI/NSF® Standard 61, Annex G and is in compliance with California's Health & Safety Code Section 116825 (commonly known as AB1953) and Vermont Act 193. Weighted average lead content <=0.25%. Spears® PVC and CPVC Pipe, Fittings and Valves have always been lead-free and Certified by NSF International for use in potable water systems. Spears® offers a wide range of lead-free specialty fittings and transition adapters for plumbing applications. However, certain brass threaded adapter fittings for applications that are not intended to convey water for human consumption through drinking or cooking are still produced and available.

FIELD SET TFM# 21689-A, 21689-B, 21689-C PROJECT# 2025-11-03-04

THESE SPECIFICATIONS ARE REQUIRED TO BE KEPT ON THE JOB SITE AT ALL TIMES OF CONSTRUCTION. CERTIFICATE OF COMPLIANCE TO BE ISSUED BY THE PROJECT COMPLETION. No alterations, deletions or additions of any nature are allowed to this approved set without written permission of this office. TENNESSEE STATE FIRE MARSHAL'S OFFICE

SOCKET DIMENSIONS

SCH 40 - ASTM F438
SCH 80 - ASTM F439

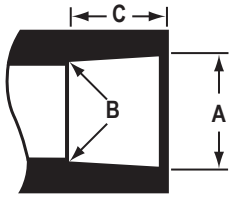

Size	Socket Entrance A	Socket Bottom B	Tolerance	SCH 40 Minimum Socket Length C	SCH 80 Minimum Socket Length C
3/4	1.058	1.046	± .004	.719	1.000
1	1.325	1.130	± .005	.875	1.125
1-1/4	1.670	1.655	± .005	.938	1.250
1-1/2	1.912	1.894	± .006	1.094	1.375
2	2.387	2.369	± .005	1.156	1.500
2-1/2	2.889	2.868	± .007	1.750	1.750
3	3.516	3.492	± .008	1.875	1.875

TEE

Socket x Socket x Socket

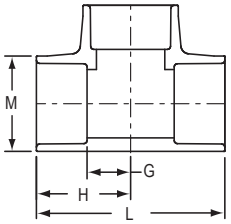

Part Number	Size	G	H	L	M	Approx. Wt. (Lbs.)
4201-007	3/4	9/16	1-1/2	2-31/32	1-5/16	.11
4201-010	1	7/8	1-13/16	3-5/8	1-5/8	.20
4201-012	1-1/4	15/32	2-3/32	4-7/32	2	.29
4201-015	1-1/2	1-5/32	2-9/16	5-3/32	2-11/32	.54
4201-020	2	1-13/32	2-15/16	5-7/8	2-7/8	.86
4201-025	2-1/2	1-23/32	3-1/2	7	3-15/32	1.62
4201-030	3	2-1/16	3-31/32	7-15/16	4-5/32	2.53

REDUCING TEE

Socket x Socket x Socket

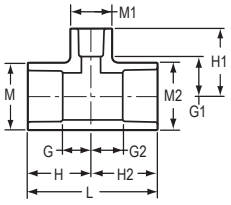

Part Number	Size	G	G1	G2	H	H1	H2	L	M	M1	M2	Approx. Wt. (Lbs.)
4201-102	3/4x3/4x1	3/4	3/4	3/4	1-11/16	1-25/32	1-11/16	3-13/32	1-5/16	1-21/32	1-5/16	.13
4201-125	1x3/4x3/4	23/32	7/8	23/32	1-25/32	1-13/16	1-21/32	3-7/16	1-19/32	1-11/32	1-5/16	.16
4201-126	1x3/4x1	23/32	23/32	3/4	1-27/32	1-27/32	1-3/4	3-19/32	1-5/8	1-5/8	1-5/16	.17
4201-131	1x1x3/4	11/16	13/16	11/16	1-13/16	1-13/16	1-13/16	3-5/8	1-5/8	1-5/16	1-5/8	.17
4201-157	1-1/4x1x3/4	11/16	1-1/32	11/16	1-15/16	2-1/32	1-13/16	3-25/32	2-3/32	1-13/32	1-23/32	.32

FIELD SET TFM# 21689-A, 21689-B, 21689-C PROJECT# 2025-11-03-04

THESE PLANS AND SPECIFICATIONS ARE TO BE KEPT ON THE JOB SITE AT ALL TIMES OF OCCUPANCY OR PRIOR TO COMPLETION FORM IS ISSUED BY THIS OFFICE
No alterations, additions or modifications of any kind are to be made to this approved set without written permission of this office
TENNESSEE STATE FIRE MARSHAL'S OFFICE

REDUCING TEE (continued)

Socket x Socket x Socket

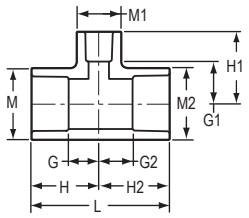

Part Number	Size	G	G1	G2	H	H1	H2	L	M	M1	M2	Approx. Wt. (Lbs.)
4201-158	1-1/4x1x1	27/32	29/32	25/32	2-1/16	2-1/32	1-29/32	3-15/16	1-31/32	1-5/8	1-5/8	.24
4201-159	1-1/4x1x1-1/4	31/32	31/32	31/32	2-7/32	2-7/32	2-3/32	4-11/32	2-1/8	2-1/8	1-23/32	.36
4201-167	1-1/4x1-1/4x3/4	21/32	1	21/32	1-29/32	2	1-29/32	3-13/16	2	1-5/16	2	.22
4201-168	1-1/4x1-1/4x1	13/16	1	13/16	2-1/16	2-1/8	2-1/16	4-1/8	1-31/32	1-21/32	1-31/32	.24
4201-169	1-1/4x1-1/4x1-1/2	1-1/8	15/16	1-1/8	2-3/8	2-11/32	2-3/8	4-3/4	2-3/32	2-11/32	2-3/32	.51
4201-201	1-1/2x1-1/4x3/4	11/16	1	1/4	2-1/16	2	1-15/16	4	2-5/16	1-3/8	2-1/16	.41
4201-202	1-1/2x1-1/4x1	27/32	1-1/32	1	2-7/32	2-5/32	2-1/4	4-15/32	2-5/16	1-11/16	2-1/16	.42
4201-210	1-1/2x1-1/2x3/4	11/16	1-1/32	11/16	2-1/16	2-1/32	2-1/16	4-5/32	2-11/32	1-13/32	2-11/32	.39
4201-211	1-1/2x1-1/2x1	13/16	1-3/32	13/16	2-3/16	2-1/4	2-3/16	4-3/8	2-11/32	1-3/4	2-11/32	.41
4201-212	1-1/2x1-1/2x1-1/4	1-1/32	1-3/32	1-1/32	2-13/32	2-11/32	2-13/32	4-13/16	2-11/32	2-1/8	2-11/32	.49
4201-213	1-1/2x1-1/2x2	1-9/32	1-5/32	1-9/32	2-21/32	2-21/32	2-21/32	5-11/32	2-11/32	2-29/32	2-11/32	.64
4201-248	2x2x3/4	11/16	1-13/32	11/16	2-7/32	2-7/16	2-7/32	4-7/16	2-27/32	1-3/8	2-27/32	.52
4201-249	2x2x1	27/32	1-13/32	27/32	2-11/32	2-9/16	2-11/32	4-23/32	2-7/8	1-3/4	2-7/8	.58
4201-250	2x2x1-1/4	1-1/32	1-11/32	1-1/32	2-17/32	2-19/32	2-17/32	5-3/32	2-7/8	2-3/32	2-7/8	.65
4201-251	2x2x1-1/2	1-5/32	1-7/16	1-5/32	2-11/16	2-13/32	2-11/16	5-3/8	2-7/8	2-13/32	2-7/8	.79
4201-289	2-1/2x2-1/2x1	27/32	1-23/32	27/32	2-5/8	2-27/32	2-5/8	5-1/4	3-17/32	1-23/32	3-17/32	1.01
4201-290	2-1/2x2-1/2x1-1/4	1-3/32	1-23/32	1-1/32	2-13/16	2-31/32	2-13/16	5-21/32	3-9/16	2-3/32	3-9/16	1.13
4201-291	2-1/2x2-1/2x1-1/2	1-3/16	1/2	1-3/16	2-15/16	1-7/8	2-15/16	5-7/8	3-15/32	2-11/32	3-15/32	1.26
4201-292	2-1/2x2-1/2x2	1-13/32	1-5/8	1-13/32	3-3/16	3-1/8	3-3/16	6-3/8	3-1/2	2-7/8	3-1/2	1.37
4201-335	3x3x1	7/8	1-15/16	7/8	2-3/4	3-1/16	2-3/4	5-15/32	4-3/16	1-23/32	4-3/16	1.26
4201-336*	3x3x1-1/4	1-3/8	1-3/4	1-3/8	3-5/16	3-1/2	3-5/16	6-5/8	4-1/8	2-7/8	4-1/8	1.94
4201-337	3x3x1-1/2	1-5/32	2-1/16	1-5/32	3-1/32	3-7/16	3-1/32	6-3/32	4-3/16	2-3/8	4-3/16	1.46
4201-338	3x3x2	1-7/16	1-13/16	1-7/16	3-5/16	3-5/16	3-5/16	6-19/32	4-3/16	2-7/8	4-3/16	1.69
4201-339	3x3x2-1/2	1-3/4	1-31/32	1-3/4	3-5/8	3-23/32	3-5/8	7-1/4	4-3/16	3-17/32	4-3/16	2.11

*** Branch Outlet Sized with Bushing**

TorqueSafe™ SPRINKLER HEAD TEE

Gasket Sealed Brass Thread Insert Style

Socket x Socket x Gasket Fipt

With Elastomer Seal - Use NO Thread Sealant

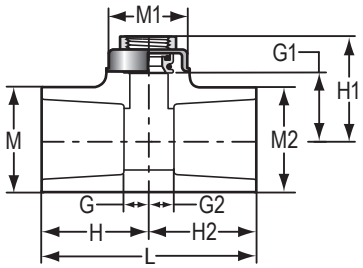

Part Number	Size	G	G1	G2	H	H1	H2	L	M	M1	M2	Approx. Wt. (Lbs.)
4202-101 G	3/4x3/4x1/2	7/16	1-3/16	7/16	1-7/16	1-7/16	1-17/32	2-29/32	1-3/8	1-3/8	1-3/8	.22
4202-124 G	1x3/4x1/2	7/16	1-11/32	9/16	1-9/16	1-11/16	1-9/16	3-1/8	1-11/16	1-3/8	1-3/8	.26
4202-130 G	1x1x1/2	7/16	1-11/32	7/16	1-9/16	1-11/16	1-9/16	3-1/8	1-23/32	1-3/8	1-23/32	.28
4202-131 G	1x1x3/4	17/32	15/16	17/32	1-11/16	1-5/8	1-11/16	3-11/32	1-23/32	1-9/16	1-23/32	.31
4202-166 G	1-1/4x1-1/4x1/2	7/16	1-5/8	7/16	1-11/16	1-15/16	1-11/16	3-3/8	2-1/16	1-3/8	2-1/16	.34
4202-209 G	1-1/2x1-1/2x1/2	1/2	1-13/16	1/2	1-7/8	2-3/32	1-7/8	3-3/4	2-11/32	1-3/8	2-11/32	.41
4202-247 G	2x2x1/2	1/2	2-1/16	1/2	2	2-11/32	2	4-1/32	2-27/32	1-3/8	2-27/32	.54

Not intended to convey or dispense water for human consumption through drinking or cooking

FIELD SET TFM# 21689-A, 21689-B, 21689-C PROJECT# 2025-11-03-04

THESE PLANS AND SPECIFICATIONS ARE REQUIRED TO BE KEPT ON THE JOB SITE UNTIL A FINAL CERTIFICATE OF OCCUPANCY OR PROJECT COMPLETION FORM IS ISSUED BY THIS OFFICE.
No alterations, deletions, additions or revisions of any kind are allowed to this approved set without written permission of this office.
TENNESSEE STATE FIRE MARSHAL'S OFFICE

SPRINKLER HEAD TEE
Brass Thread Insert Style
Socket x Socket x Fipt

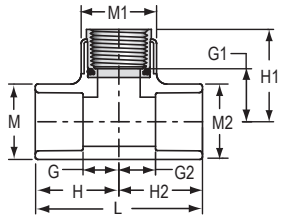

Part Number	Size	G	G1	G2	H	H1	H2	L	M	M1	M2	Approx. Wt. (Lbs.)
4202-010	1x1x1	21/31	1-1/8	21/31	1-25/32	1-29/32	1-25/32	3-19/32	1-23/32	1-23/32	1-23/32	.37

Not intended to convey or dispense water for human consumption through drinking or cooking

SofTorque™ SR REDUCING TEE
Gasket Sealed Special Reinforced Plastic Thread Style
Socket x Socket x SR Fipt
With Elastomer Seal - Use NO Thread Sealant

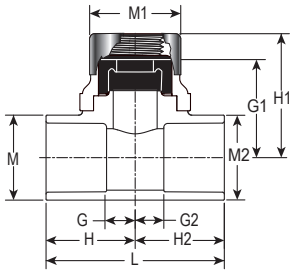

Part Number	Size	G	G1	G2	H	H1	H2	L	M	M1	M2	Approx. Wt. (Lbs.)
4202-101GSR	3/4x3/4x1/2	7/16	1-1/2	7/16	1-3/8	1-7/8	1-3/8	2-3/4	1-5/16	1-3/8	1-5/16	.16
4202-130GSR	1x1x1/2	7/16	1-5/8	7/16	1-1/2	2	1-1/2	3	1-5/8	1-3/8	1-5/8	.20

SPRINKLER REDUCING HEAD TEE
Brass Thread Insert Style
Socket x Socket x Fipt

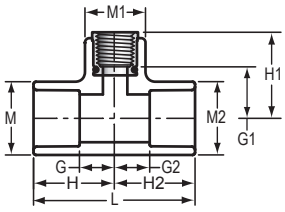

Part Number	Size	G	G1	G2	H	H1	H2	L	M	M1	M2	Approx. Wt. (Lbs.)
4202-101	3/4x3/4x1/2	7/16	1-1/16	7/16	1-15/32	1-5/8	1-15/32	2-29/32	1-13/32	1-3/16	1-13/32	.20
4202-124	1x3/4x1/2	7/16	1-11/32	9/16	1-9/16	1-11/16	1-9/16	3-1/8	1-11/16	1-3/8	1-3/8	.26
4202-130	1x1x1/2	7/16	1-7/32	7/16	1-9/16	1-25/32	1-9/16	3-1/8	1-3/4	1-3/16	1-3/4	.26
4202-156	1-1/4x1x1/2	7/16	1-7/16	9/16	1-11/16	2-1/32	1-11/16	3-3/8	2-3/32	1-3/16	1-23/32	.30
4202-166	1-1/4x1-1/4x1/2	7/16	1-15/32	7/16	1-11/16	2-1/32	1-11/16	3-3/8	2-3/32	1-3/16	2-3/32	.31
4202-199	1-1/2x1-1/4x1/2	1/2	1-5/8	9/16	1-7/8	2-3/16	1-13/16	3-11/16	2-11/32	1-3/16	2-1/16	.37
4202-209	1-1/2x1-1/2x1/2	1/2	1-5/8	1/2	1-7/8	2-3/16	1-7/8	3-3/4	2-11/32	1-3/16	2-11/32	.38
4202-237	2x1-1/2x1/2	1/2	1-27/32	17/32	2	2-7/16	1-29/32	3-15/16	2-7/8	1-3/16	2-11/32	.47
4202-247	2x2x1/2	1/2	1-7/8	1/2	2	2-7/16	2	4-1/32	2-27/32	1-3/16	2-27/32	.50

Not intended to convey or dispense water for human consumption through drinking or cooking

FIELD SET TFM# 21689-A, 21689-B, 21689-C PROJECT# 2025-11-03-04

THESE PLANS AND SPECIFICATIONS ARE REQUIRED TO BE KEPT ON THE JOB SITE UNTIL A FINAL CERTIFICATE OF OCCUPANCY OR PROJECT COMPLETION FORM IS ISSUED BY THIS OFFICE.
No alterations, deletions, additions or modifications of any kind are allowed to this approved set without written permission of this office.
TENNESSEE STATE FIRE MARSHAL'S OFFICE

SPRINKLER HEAD TEE
Special Reinforced Plastic Thread Style

Socket x Socket x SR Fipt

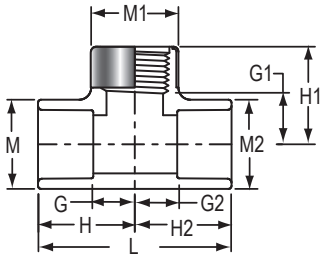

Part Number	Size	G	G1	G2	H	H1	H2	L	M	M1	M2	Approx. Wt. (Lbs.)
4202-010SR	1x1x1	21/32	3/4	21/32	1-25/32	1-5/8	1-25/32	3-19/32	1-23/32	1-11/16	1-23/32	.26

SPRINKLER REDUCING HEAD TEE
Special Reinforced Plastic Thread Style

Socket x Socket x SR Fipt

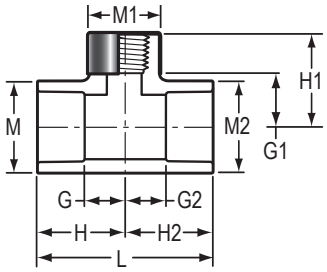

Part Number	Size	G	G1	G2	H	H1	H2	L	M	M1	M2	Approx. Wt. (Lbs.)
4202-101SR	3/4x3/4x1/2	19/32	25/32	19/32	1-19/32	1-7/16	1-19/32	3-7/32	1-13/32	1-3/16	1-13/32	.15
4202-124SR	1x3/4x1/2	7/16	29/32	9/16	1-19/32	1-5/8	1-9/16	3-5/32	1-23/32	1-3/16	1-17/32	.19
4202-130SR	1x1x1/2	7/16	29/32	7/16	1-9/16	1-5/8	1-9/16	3-1/8	1-23/32	1-3/16	1-23/32	.20
4202-156SR	1-1/4x1x1/2	15/32	1-5/32	19/32	1-23/32	1-7/8	1-23/32	3-13/32	2-3/32	1-3/16	1-23/32	.26
4202-166SR	1-1/4x1-1/4x1/2	7/16	1-1/8	7/16	1-11/16	1-27/32	1-11/16	3-3/8	2-3/32	1-3/16	2-3/32	.26
4202-168SR	1-1/4x1-1/4x1	27/32	1-1/32	27/32	2-3/32	1-29/32	2-3/32	4-7/32	2-3/32	1-11/16	2-3/32	.34
4202-199SR	1-1/2x1-1/4x1/2	9/16	1-9/32	17/32	1-15/16	2	1-25/32	3-23/32	2-11/32	1-3/16	2-3/32	.33
4202-209SR	1-1/2x1-1/2x1/2	1/2	1-1/4	1/2	1-7/8	1-31/32	1-7/8	3-3/4	2-11/32	1-3/16	2-11/32	.35
4202-211SR	1-1/2x1-1/2x1	27/32	1-7/32	27/32	2-7/32	2-1/8	2-7/32	4-15/32	2-11/32	1-23/32	2-11/32	.44
4202-237SR	2x1-1/2x1/2	23/32	1-9/16	3/8	2-7/32	2-9/32	1-3/4	3-31/32	2-7/8	1-3/16	2-11/32	.45
4202-247SR	2x2x1/2	1/2	31/32	1/2	2	1-11/16	19/32	4	2-7/8	1-3/16	2-7/8	.48
4202-287SR	2-1/2x2-1/2x1/2	17/32	1-3/4	17/32	2-9/32	2-1/2	2-9/32	4-19/32	3-1/2	1-7/32	3-1/2	.78

SOFTORQUE™
SR SPRINKLER HEAD TEE
Gasket Sealed Special Reinforced Plastic Thread Style

Socket x SR Fipt x Socket

Stainless Steel Collar With Elastomer Seal - Use NO Thread Sealant

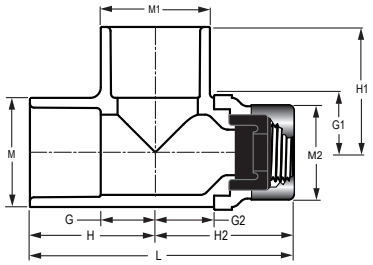

Part Number	Size	G	G1	G2	H	H1	H2	L	M	M1	M2	Approx. Wt. (Lbs.)
4203-122GSR	1x1/2x1	13/16	13/16	1-1/2	1-27/32	1-27/32	1-31/32	3-13/16	1-5/8	1-5/8	1-3/8	.22

FIELD SET TFM# 21689-A, 21689-B, 21689-C PROJECT# 2025-11-03-04

THESE PLANS AND SPECIFICATIONS ARE REQUIRED TO BE POSTED ON THE JOB SITE UNTIL A FINAL CERTIFICATE OF OCCUPANCY OR PROJECT COMPLETION FORM IS ISSUED BY THIS OFFICE.
No alterations, deletions, additions or revisions of drawings are allowed to this approved set without written permission of this office.
TENNESSEE STATE FIRE MARSHAL'S OFFICE

TorqueSafe™
SPRINKLER HEAD TEE
Gasket Sealed
Brass Thread Insert Style

Socket x Gasket Fipt x Socket
With Elastomer Seal - Use NO Thread Sealant

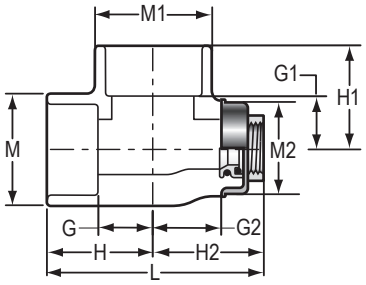

Part Number	Size	G	G1	G2	H	H1	H2	L	M	M1	M2	Approx. Wt. (Lbs.)
4203-122 G	1x1/2x1	19/32	13/16	1-13/32	1-19/32	1-27/32	1-3/4	3-11/32	1-5/8	1-5/8	1-3/8	.25

Not intended to convey or dispense water for human consumption through drinking or cooking

SPRINKLER HEAD TEE
Brass Thread Insert Style

Socket x Fipt x Socket

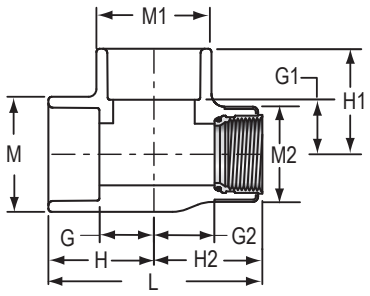

Part Number	Size	G	G1	G2	H	H1	H2	L	M	M1	M2	Approx. Wt. (Lbs.)
4203-122	1x1/2x1	23/32	3/4	1-1/4	1-5/8	1-5/8	1-15/16	3-1/2	1-23/32	1-23/32	1-3/16	.25

Not intended to convey or dispense water for human consumption through drinking or cooking

SPRINKLER HEAD TEE
Special Reinforced
Plastic Thread Style

Socket x SR Fipt x Socket

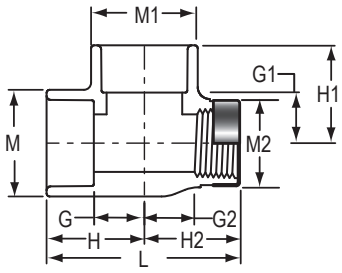

Part Number	Size	G	G1	G2	H	H1	H2	L	M	M1	M2	Approx. Wt. (Lbs.)
4203-122SR	1x1/2x1	27/32	23/32	1-3/32	1-23/32	1-5/8	1-25/32	3-13/32	1-3/4	1-3/4	1-3/16	.21

FIELD SET TFM# 21689-A, 21689-B, 21689-C PROJECT# 2025-11-03-04

THESE PLANS AND SPECIFICATIONS ARE REQUIRED TO BE KEPT ON THE JOB SITE UNTIL A FINAL CERTIFICATE OF OCCUPANCY OR PROJECT COMPLETION FORM IS ISSUED BY THIS OFFICE.
No alterations, deletions, additions or modifications of any kind are allowed to this approved set without written permission of this office.
TENNESSEE STATE FIRE MARSHAL'S OFFICE

STREET TEE

Spigot x Socket x Socket

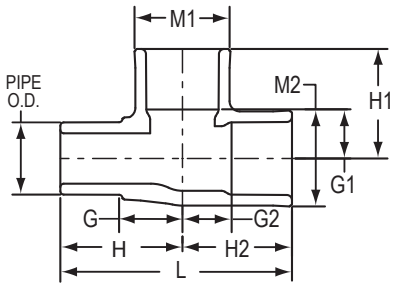

Part Number	Size	G	G1	G2	H	H1	H2	L	M1	M2	Approx. Wt. (Lbs.)
4244-007	3/4	13/16	27/32	27/32	1-13/16	1-7/8	1-7/8	3-5/8	1-13/32	1-13/32	.16
4244-010	1	1-5/32	1-1/32	1-1/32	2-1/8	1-29/32	1-29/32	4-3/16	1-3/4	1-3/4	.27
4244-012	1-1/4	1-1/4	1	1	2-7/16	2-9/32	2-9/32	4-27/32	2-3/32	2-3/32	.42
4244-015	1-1/2	1-13/16	1-1/8	1-1/8	2-7/8	2-9/16	2-9/16	5-11/32	2-11/32	2-11/32	.56
4244-020	2	1-23/32	1-7/16	1-13/32	3-1/4	2-15/16	2-15/16	6-5/32	2-7/8	2-7/8	.84

90° ELBOW

Socket x Socket

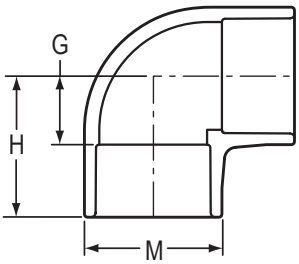

Part Number	Size	G	H	M	Approx. Wt. (Lbs.)
4206-007	3/4	9/16	1-1/2	1-5/16	.07
4206-010	1	3/4	1-5/8	1-5/8	.11
4206-012	1-1/4	15/16	2-3/16	2	.22
4206-015	1-1/2	1-5/32	2-17/32	2-3/8	.41
4206-020	2	1-13/32	2-29/32	2-7/8	.62
4206-025	2-1/2	1-15/32	3-3/8	3-1/2	1.15
4206-030	3	1-5/32	3-3/32	4-3/16	1.83

FIELD SET TFM# 21689-A, 21689-B, 21689-C PROJECT# 2025-11-03-04

THESE PLANS AND SPECIFICATIONS ARE REQUIRED TO BE KEPT ON THE JOB SITE UNTIL A FINAL CERTIFICATE OF OCCUPANCY OR PROJECT COMPLETION FORM IS ISSUED BY THIS OFFICE.
No alterations, deletions, additions or revisions of any kind are allowed to this approved set without written permission of this office.
TENNESSEE STATE FIRE MARSHAL'S OFFICE

SIDE OUTLET ELBOW

Socket x Socket x Socket

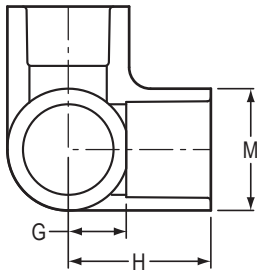

Part Number	Size	G	H	M	Approx. Wt. (Lbs.)
4213-007	3/4	27/32	1-19/32	1-5/16	.09
4213-010	1	13/16	1-7/8	1-5/8	.18

REDUCING 90° ELBOW

Socket x Socket

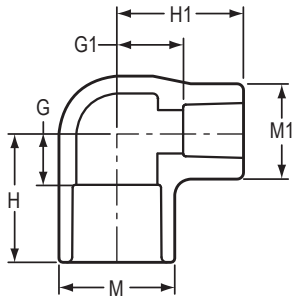

Part Number	Size	G	G1	H	H1	M	M1	Approx. Wt. (Lbs.)
4206-131	1x3/4	21/32	13/16	1-25/32	1-13/16	1-19/32	1-5/16	.11

TorqueSafe™ 90° SPRINKLER HEAD ELBOW

Gasket Sealed Brass Thread Insert Style

Socket x Gasket Fipt

With Elastomer Seal - Use NO Thread Sealant

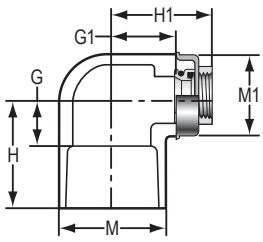

Part Number	Size	G	G1	H	H1	M	M1	Approx. Wt. (Lbs.)
4207-101 G	3/4x1/2	9/16	1-7/32	1-13/32	1-17/32	1-13/32	1-3/8	.19
4207-130 G	1x1/2	7/16	1-3/16	1-9/16	1-11/16	1-23/32	1-3/8	.23
4207-166 G	1-1/4x1/2	15/32	1-19/32	1-15/16	1-11/16	2-3/32	1-3/8	.25

Not intended to convey or dispense water for human consumption through drinking or cooking

FIELD SET TFM# 21689-A, 21689-B, 21689-C PROJECT# 2025-11-03-04

THESE PLANS AND SPECIFICATIONS ARE REQUIRED TO BE KEPT ON THE JOB SITE UNTIL A FINAL CERTIFICATE OF OCCUPANCY OR PROJECT COMPLETION FORM IS ISSUED BY THIS OFFICE.
No alterations, deletions, additions or modifications of any kind are allowed to this approved set without written permission of this office.
TENNESSEE STATE FIRE MARSHAL'S OFFICE

SPRINKLER HEAD 90° ELBOW
Brass Thread Insert Style
Socket x Fipt

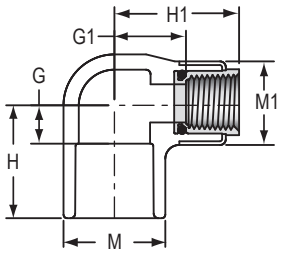

Part Number	Size	G	G1	H	H1	M	M1	Approx. Wt. (Lbs.)
4207-101	3/4x1/2	1/2	1-3/32	1-1/2	1-5/8	1-13/32	1-3/16	.17
4207-130	1x1/2	7/16	1-7/32	1-19/32	1-25/32	1-23/32	1-3/16	.21
4207-131	1x3/4	17/32	1-11/32	1-21/32	1-31/32	1-23/32	1-3/8	.25
4207-166	1-1/4x1/2	15/32	1-17/32	1-11/16	1-15/16	2-3/32	1-17/32	.33

Not intended to convey or dispense water for human consumption through drinking or cooking

SofTorque™ SR 90° ELBOW SPRINKLER HEAD ADAPTER
Gasket Sealed Special Reinforced Plastic Thread Style
Socket x SR Fipt
With Elastomer Seal - Use NO Thread Sealant

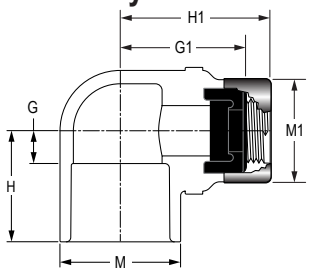

Part Number	Size	G	G1	H	H1	M	M1	Approx. Wt. (Lbs.)
4207-101GSR	3/4x1/2	7/16	1-17/32	1-3/8	1-27/32	1-11/32	1-3/8	.17
4207-130GSR	1x1/2	7/16	1-11/16	1-1/2	2	1-21/32	1-3/8	.19
4207-166GSR	1-1/4x1/2	7/16	1-7/8	1-11/16	2-7/32	2	1-3/8	.22

SPRINKLER HEAD 90° ELBOW
Special Reinforced Plastic Thread Style
Socket x SR Fipt

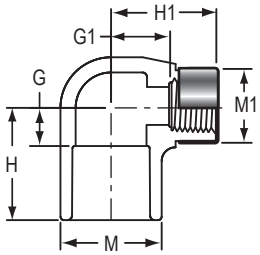

Part Number	Size	G	G1	H	H1	M	M1	Approx. Wt. (Lbs.)
4207-101SR	3/4x1/2	11/32	13/16	1-15/32	1-1/2	1-13/32	1-3/16	.14
4207-130SR	1x1/2	7/16	7/8	1-9/16	1-5/8	1-23/32	1-3/8	.20
4207-131SR	1x3/4	1/2	7/8	1-5/8	1-9/16	1-23/32	1-3/8	.16
4207-166SR	1-1/4x1/2	13/32	1-1/32	1-21/32	1-23/32	2-3/32	1-7/32	.19

FIELD SET TFM# 21689-A, 21689-B, 21689-C PROJECT# 2025-11-03-04

THESE PLANS AND SPECIFICATIONS ARE REQUIRED TO BE KEPT ON THE JOB SITE UNTIL A FINAL CERTIFICATE OF OCCUPANCY OR PROJECT COMPLETION FORM IS ISSUED BY THE OFFICE.
No alterations, deletions, additions or revisions of any kind are allowed to this approved set without written permission of this office.
TENNESSEE STATE FIRE MARSHAL'S OFFICE

90° STREET ELBOW

Spigot x Socket

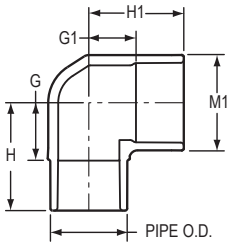

Part Number	Size	G	G1	H	H1	M1	Approx. Wt. (Lbs.)
4209-007	3/4	29/32	19/32	1-15/16	1-11/16	1-13/32	.12
4209-010	1	1-9/32	23/32	2-13/32	1-27/32	1-3/4	.21
4209-012	1-1/4	1-9/16	27/32	2-13/16	2-3/32	2-3/32	.32
4209-015	1-1/2	1-15/32	1-3/16	2-27/32	2-9/16	2-11/32	.42
4209-020	2	1-23/32	1-3/8	3-7/32	2-15/16	2-27/32	.65

22-1/2° ELBOW

Socket x Socket

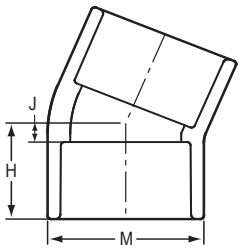

Part Number	Size	H	J	M	Approx. Wt. (Lbs.)
4216-007	3/4	1-3/16	7/32	1-13/32	.09
4216-010	1	1-3/8	9/32	1-25/32	.14
4216-012	1-1/4	1-1/2	5/16	2-3/32	.20
4216-015	1-1/2	1-7/16	13/32	1-3/8	.19
4216-020	2	1-7/8	3/8	2-27/32	.43
4216-030	3	2-3/8	1/2	4-5/32	1.00

22-1/2° STREET ELBOW

Spigot x Socket

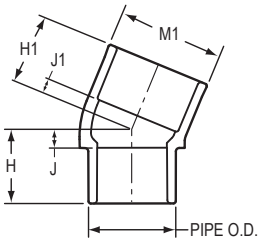

Part Number	Size	H	H1	J	J1	M1	Approx. Wt. (Lbs.)
4242-007	3/4	1-1/4	1-1/2	1/4	1/2	1-3/8	.08
4242-010	1	1-7/16	1-11/32	5/16	7/32	1-23/32	.14
4242-012	1-1/4	1-9/16	1-25/32	17/32	11/16	2-1/16	.21
4242-015	1-1/2	1-13/32	1-23/32	1/2	11/32	2-11/32	.28
4242-020	2	1-29/32	2-1/8	7/32	5/8	2-7/8	.42
4242-025	2-1/2	2-1/8	2-1/4	13/32	1/2	3-1/2	.68
4242-030	3	2-13/32	2-13/32	9/16	17/32	4-5/32	.99

FIELD SET TFM# 21689-A, 21689-B, 21689-C PROJECT# 2025-11-03-04

THESE PLANS AND SPECIFICATIONS ARE REQUIRED TO BE KEPT ON THE JOB SITE UNTIL FINAL CERTIFICATE OF OCCUPANCY OR PROJECT COMPLETION FORM IS ISSUED BY THIS OFFICE.
No alterations, deletions, additions or modifications of any kind are allowed to this approved set without written permission of this office.
TENNESSEE STATE FIRE MARSHAL'S OFFICE

45° ELBOW

Socket x Socket

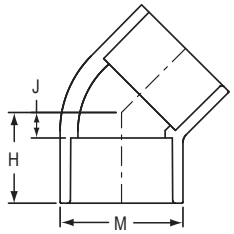

Part Number	Size	H	J	M	Approx. Wt. (Lbs.)
4217-007	3/4	1-5/16	5/16	1-5/16	.07
4217-010	1	1-13/32	3/8	1-5/8	.11
4217-012	1-1/4	1-5/8	3/8	2-5/32	.21
4217-015	1-1/2	1-27/32	15/32	2-11/32	.32
4217-020	2	2-1/8	21/32	2-7/8	.48
4217-025	2-1/2	2-17/32	3/4	3-1/2	.88
4217-030	3	2-29/32	29/32	4-5/32	1.17

CROSS

Socket x Socket x Socket x Socket

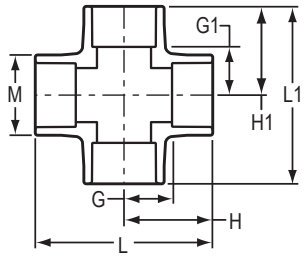

Part Number	Size	G	G1	H	H1	L	L1	M	Approx. Wt. (Lbs.)
4220-007	3/4	5/8	5/8	1-21/32	1-21/32	3-5/16	3-5/16	1-13/32	.22
4220-010	1	3/4	3/4	1-5/8	1-5/8	3-1/4	3-1/4	1-23/32	.20
4220-012	1-1/4	1-1/8	1-1/8	2-3/8	2-3/8	4-3/4	4-3/4	2-3/32	.63
4220-015	1-1/2	1-7/32	1-7/32	2-5/8	2-5/8	5-7/32	5-7/32	2-3/8	.80
4220-020	2	1-1/2	1-1/2	3	3	6	6	3	1.43
4220-025	2-1/2	1-11/16	1-11/16	3-7/16	3-7/16	6-7/8	6-7/8	3-17/32	2.16
4220-030	3	2-3/32	2-3/32	3-31/32	3-31/32	7-15/16	7-15/16	4-7/16	3.37

FIELD SET TFM# 21689-A, 21689-B, 21689-C PROJECT# 2025-11-03-04

THESE PLANS AND SPECIFICATIONS ARE REQUIRED TO BE KEPT ON THE JOB SITE UNTIL A FINAL CERTIFICATE OF OCCUPANCY OR PROJECT COMPLETION FORM IS ISSUED BY THIS OFFICE.
No alterations, deletions, additions or revisions of any kind are allowed to this approved set without written permission of this office.
TENNESSEE STATE FIRE MARSHAL'S OFFICE

45° STREET ELBOW

Spigot x Socket

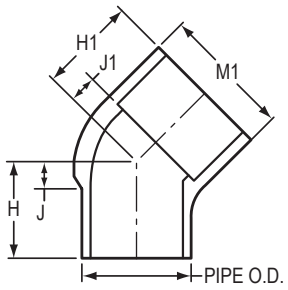

Part Number	Size	H	H1	J	J1	M1	Approx. Wt. (Lbs.)
4227-010	1	1-1/2	1-5/16	1/2	1/4	1-5/8	.10
4227-012	1-1/4	1-25/32	1-9/16	9/16	11/32	1-31/32	.15
4227-015	1-1/2	2-1/32	2-1/8	19/32	25/32	2-11/32	.29
4227-020	2	2-5/16	1-15/16	25/32	13/32	2-7/8	.44

REDUCING CROSS

Socket x Socket x Socket x Socket

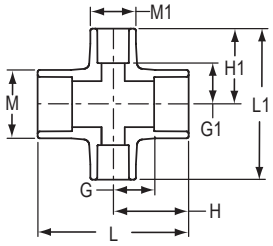

Part Number	Size	G	G1	H	H1	L	L1	M	M1	Approx. Wt. (Lbs.)
4220-131	1x3/4	23/32	5/8	1-5/8	1-5/8	3-1/4	3-1/4	1-7/8	1-1/2	.31
4220-167	1-1/4x3/4	1-1/16	23/32	2-1/16	1-31/32	4-3/32	3-31/32	2-1/16	1-13/32	.35
4220-210	1-1/2x3/4	11/16	1-5/32	2-3/32	2-3/16	4-3/16	4-11/32	2-3/8	1-13/32	.42
4220-248	2x3/4	11/16	1-7/16	2-7/32	2-7/16	4-13/32	4-7/8	2-29/32	1-13/32	.56
4220-289	2-1/2x1	29/32	1-3/4	2-11/16	2-7/8	5-11/32	5-3/4	3-1/2	1-3/4	.98

COUPLING

Socket x Socket

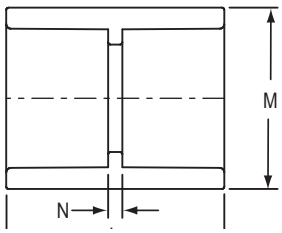

Part Number	Size	L	M	N	Approx. Wt. (Lbs.)
4229-007	3/4	2-1/8	1-5/16	3/16	.05
4229-010	1	2-3/16	1-5/8	3/32	.08
4229-012	1-1/4	2-19/32	2	3/32	.13
4229-015	1-1/2	2-7/8	2-11/32	3/32	.22
4229-020	2	3-1/8	2-7/8	1/8	.33
4229-025	2-1/2	3-11/16	3-15/32	3/16	.48
4229-030	3	4	4-3/16	1/4	.89

FIELD SET TFM# 21689-A, 21689-B, 21689-C PROJECT# 2025-11-03-04

THESE PLANS AND SPECIFICATIONS ARE REQUIRED TO BE KEPT ON THE JOB SITE UNTIL A FINAL CERTIFICATE OF OCCUPANCY OR PROJECT COMPLETION FORM IS ISSUED BY THIS OFFICE.
No alterations, additions, deletions, addition or modifications of any kind are allowed to this approved set without written permission of this office.
TENNESSEE STATE FIRE MARSHAL'S OFFICE

REDUCER COUPLING

Socket x Socket

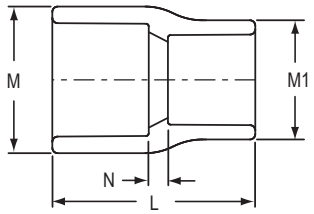

Part Number	Size	L	M	M1	N	Approx. Wt. (Lbs.)
4229-131	1x3/4	2-3/8	1-23/32	1-13/32	7/32	.10
4229-167	1-1/4x3/4	2-19/32	2-3/32	1-5/8	11/32	.17
4229-168	1-1/4x1	2-11/16	2-3/32	1-23/32	5/16	.18
4229-210	1-1/2x3/4	2-13/16	2-11/32	1-13/32	15/32	.19
4229-211	1-1/2x1	2-7/8	2-11/32	1-15/16	3/8	.24
4229-212	1-1/2x1-1/4	2-13/16	2-13/32	2-1/8	5/32	.23
4229-248	2x3/4	3-3/16	2-7/8	1-7/16	23/32	.32
4229-249	2x1	3-1/8	2-7/8	1-23/32	1/2	.31
4229-250	2x1-1/4	3-3/16	2-7/8	2-1/8	17/32	.33
4229-251	2x1-1/2	3-3/16	2-27/32	2-11/32	9/32	.31
4229-291	2-1/2x1-1/2	3-23/32	3-15/32	2-11/32	21/32	.51
4229-292	2-1/2x2	3-21/32	3-1/2	2-7/8	13/32	.52
4229-337	3x1-1/2	3-1/2	4-3/16	2-3/8	7/32	.71
4229-339	3x2-1/2	3-27/32	4-3/16	3-1/2	3/16	.80

GripLoc™ COUPLING - LEAD FREE

w/EPDM O-Ring Seals

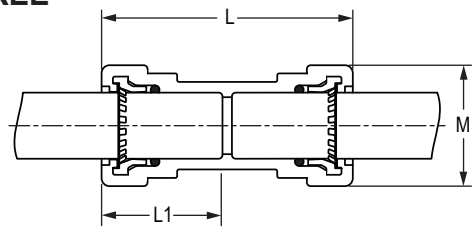

175 psi Maximum Internal Pressure @ 150°F

WARNING: DO NOT INSERT FINGERS.

Part Number	Size	L	M1	N	Approx. Wt. (Lbs.)
GL4229-007	3/4	4	1-15/16	1-29/32	.25
GL4229-010	1	4-5/32	2	2-1/4	.34

FIELD SET TFM# 21689-A, 21689-B, 21689-C PROJECT# 2025-11-03-04

THESE PLANS AND SPECIFICATIONS ARE REQUIRED TO BE KEPT ON THE JOB SITE UNTIL A FINAL CERTIFICATE OF OCCUPANCY OR PROJECT COMPLETION FORM IS ISSUED BY THIS OFFICE.
No alterations, deletions, additions or revisions of any kind are allowed to this approved set without written permission of this office.
TENNESSEE STATE FIRE MARSHAL'S OFFICE

GROOVED COUPLING ADAPTER

Groove x Socket

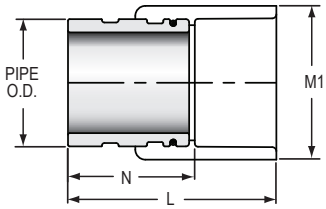

Part Number	Size	L	M1	N	Approx. Wt. (Lbs.)
4233-012	1-1/4	3-5/8	2-3/32	2-11/32	.72
4233-015	1-1/2	3-3/4	2-11/32	2-11/32	.83
4233-020	2	3-27/32	2-27/32	2-11/32	1.27
4233-025	2-1/2	4-3/16	3-15/32	2-7/16	2.02
4233-030	3	4-5/16	4-1/8	2-7/16	2.76

Not intended to convey or dispense water for human consumption through drinking or cooking

FEMALE ADAPTER

Brass Thread Insert Style

Socket x Fipt

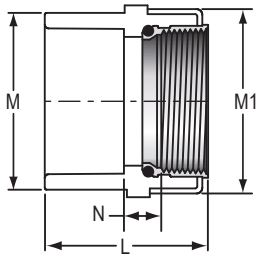

Part Number	Size	L	M	M1	N	Approx. Wt. (Lbs.)
4235-007	3/4	2	1-13/32	1-3/8	5/16	.23
4235-010	1	2-3/16	1-3/4	1-11/16	11/32	.25
4235-012	1-1/4	2-3/8	2-3/32	2-1/16	3/8	.36
4235-015	1-1/2	2-17/32	2-3/8	2-7/16	3/8	.47
4235-020	2	2-25/32	2-27/32	3-3/16	7/16	1.05

Not intended to convey or dispense water for human consumption through drinking or cooking

FEMALE ADAPTER

Special Reinforced Plastic Thread Style

Socket x SR Fipt

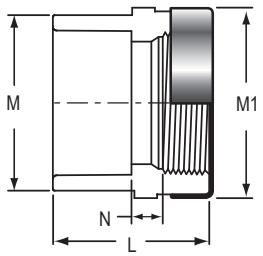

Part Number	Size	L	M	M1	N	Approx. Wt. (Lbs.)
4235-007SR	3/4	1-7/8	1-13/32	1-3/8	3/32	.08
4235-010SR	1	2-5/32	1-23/32	1-7/8	3/32	.22
4235-012SR	1-1/4	2-5/16	2-1/8	2-1/16	3/16	.20

MADE IN THE U.S.A.

FIELD SET TFM# 21689-A, 21689-B, 21689-C PROJECT# 2025-11-03-04

THESE PLANS AND SPECIFICATIONS ARE REQUIRED TO BE KEPT ON THE JOB SITE UNTIL A FINAL OCCUPANCY OR CERTIFICATE OF COMPLETION FORM IS ISSUED BY THIS OFFICE.
No alterations, additions or modifications of any kind are allowed to this approved set without written permission of this office.
TENNESSEE STATE FIRE MARSHAL'S OFFICE

FEMALE SPRINKLER HEAD ADAPTER
Special Reinforced Plastic Thread Style
Socket x SR Fipt

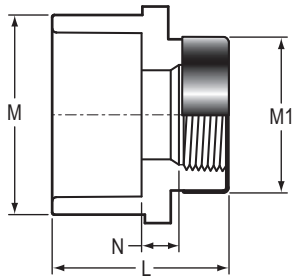

Part Number	Size	L	M	M1	N	Approx. Wt. (Lbs.)
4235-101SR	3/4x1/2	1-29/32	1-13/32	1-3/16	1/8	.08
4235-130SR	1x1/2	1-31/32	1-23/32	1-3/8	3/32	.16
4235-131SR	1x3/4	2-3/32	1-3/4	1-3/8	1/4	.13

FEMALE SPRINKLER HEAD ADAPTER
Special Reinforced Plastic Thread Style with Socket Wrench Flats
Socket x SR Fipt

M = Flat-to-Flat Dimension

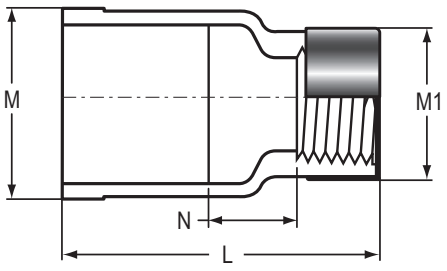

Part Number	Size	L	M	M1	N	Approx. Wt. (Lbs.)
W4235-101SR	3/4x1/2	2-9/32	1-13/32	1-3/16	17/32	.09
W4235-130SR	1x1/2	2-9/32	1-3/4	1-3/16	13/32	.12

FIELD SET TFM# 21689-A, 21689-B, 21689-C PROJECT# 2025-11-03-04

THESE PLANS AND SPECIFICATIONS ARE REQUIRED TO BE KEPT ON THE JOB SITE UNTIL A FINAL CERTIFICATE OF OCCUPANCY OR PROJECT COMPLETION FORM IS ISSUED BY THIS OFFICE.
No alterations, deletions, additions or revisions of any kind are allowed to this approved set without written permission of this office.
TENNESSEE STATE FIRE MARSHAL'S OFFICE

SPIGOT FEMALE ADAPTER
Brass Thread Insert Style
Spigot x Fipt

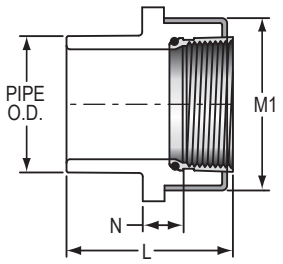

Part Number	Size	L	M1	N	Approx. Wt. (Lbs.)
4278-007	3/4	2-5/32	1-3/8	17/32	.15
4278-010	1	2-9/32	1-11/16	7/16	.22

Not intended to convey or dispense water for human consumption through drinking or cooking

SPIGOT FEMALE ADAPTER
Special Reinforced Plastic Thread Style
Spigot x SR Fipt

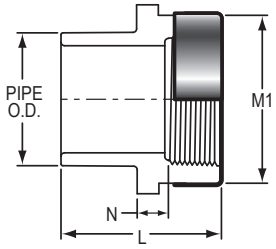

Part Number	Size	L	M1	N	Approx. Wt. (Lbs.)
4278-007SR	3/4	1-15/16	1-3/8	11/32	.08
4278-010SR	1	2-1/4	1-23/32	13/32	.13

TorqueSafe™ FEMALE SPRINKLER HEAD ADAPTER
Gasket Sealed Brass Thread Insert Style
Socket x Gasket Fipt
With Elastomer Seal - Use NO Thread Sealant

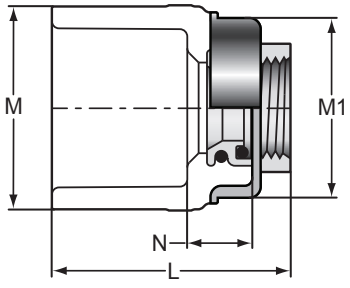

Part Number	Size	L	M	M1	N	Approx. Wt. (Lbs.)
4235-101 G	3/4x1/2	1-7/8	1-13/32	1-3/8	9/16	.15
4235-130GS	1x1/2	2-1/32	1-11/16	1-3/8	17/32	.17
4235-131 G	1x3/4	2	1-11/16	1-9/16	9/16	.18

Not intended to convey or dispense water for human consumption through drinking or cooking

FIELD SET TFM# 21689-A, 21689-B, 21689-C PROJECT# 2025-11-03-04

THESE PLANS AND SPECIFICATIONS ARE REQUIRED TO BE KEPT ON THE JOB SITE UNTIL A FINAL CERTIFICATE OF OCCUPANCY OR PROJECT COMPLETION FORM IS ISSUED BY THIS OFFICE.
No alterations, deletions, additions or modifications of any kind are allowed to this approved set without written permission of this office.
TENNESSEE STATE FIRE MARSHAL'S OFFICE

FEMALE SPRINKLER HEAD ADAPTER
Brass Thread Insert Style
Socket x Fipt

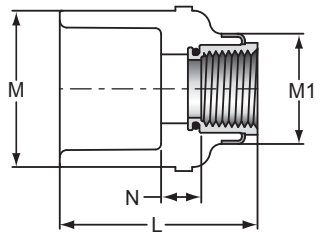

Part Number	Size	L	M	M1	N	Approx. Wt. (Lbs.)
4235-101	3/4x1/2	1-7/8	1-13/32	1-17/32	15/32	.19
4235-130	1x1/2	2-11/32	1-11/16	1-3/16	5/8	.16
4235-131	1x3/4	2-5/16	1-11/16	1-3/8	17/32	.18

Not intended to convey or dispense water for human consumption through drinking or cooking

SofTorque™ SR FEMALE SPRINKLER HEAD ADAPTER
Gasket Sealed Special Reinforced Plastic Thread Style
Socket x SR Fipt
With Elastomer Seal - Use NO Thread Sealant

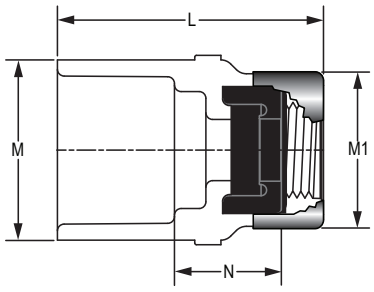

Part Number	Size	L	M	M1	N	Approx. Wt. (Lbs.)
4235-101GSR	3/4x1/2	2-5/16	1-5/16	1-3/8	31/32	.11
4235-130GSR	1x1/2	2-13/32	1-19/32	1-3/8	31/32	.13
4235-131GSR	1x3/4	2-13/32	1-5/8	1-23/32	1	.16

QuickTorque™ SR FEMALE SPRINKLER HEAD ADAPTER
Gasket Sealed Special Reinforced Plastic Thread Style
Socket x SR Metal Fipt
With Elastomer Seal - Use NO Thread Sealant

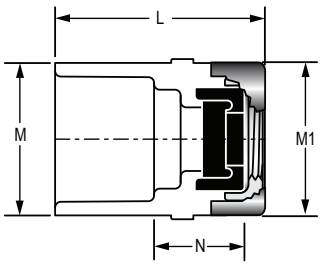

Part Number	Size	L	M	M1	N	Approx. Wt. (Lbs.)
4235-101GMR	3/4x1/2	1-15/16	1-5/16	1-9/16	13/16	.17
4235-130GMR	1x1/2	2-3/16	1-19/32	1-9/16	15/16	.19

FIELD SET TFM# 21689-A, 21689-B, 21689-C PROJECT# 2025-11-03-04

THESE PLANS AND SPECIFICATIONS ARE REQUIRED TO BE KEPT ON THE JOB SITE UNTIL A FINAL CERTIFICATE OF OCCUPANCY OR PROJECT COMPLETION FORM IS ISSUED BY THIS OFFICE.
No alterations, deletions, additions or applications of any kind are allowed to this approved set without written permission of this office.
TENNESSEE STATE FIRE MARSHAL'S OFFICE

FEMALE SPRINKLER HEAD ADAPTER
Brass Thread Insert Style with Long Body
Socket x Fipt

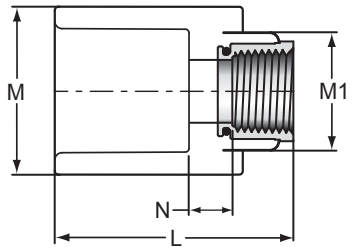

Part Number	Size	L	M	M1	N	Approx. Wt. (Lbs.)
L4235-130	1x1/2	2-3/16	1-23/32	1-7/32	1/2	.19

Not intended to convey or dispense water for human consumption through drinking or cooking

FEMALE SPRINKLER HEAD ADAPTER
Brass Thread Insert Style with Positioning Ring
Socket x Fipt

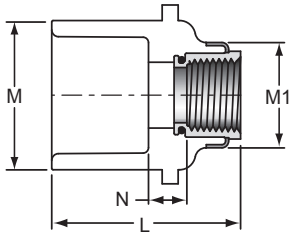

Part Number	Size	L	M	M1	N	Approx. Wt. (Lbs.)
R4235-101	3/4x1/2	2-1/32	1-7/16	1-3/16	15/32	.15

Not intended to convey or dispense water for human consumption through drinking or cooking

FEMALE SPRINKLER HEAD ADAPTER
Special Reinforced Plastic Thread Style with Positioning Ring
Socket x SR Fipt

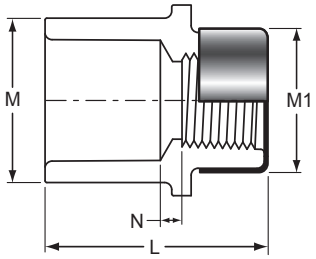

Part Number	Size	L	M	M1	N	Approx. Wt. (Lbs.)
R4235-101SR	3/4x1/2	1-15/16	1-7/16	1-7/32	7/32	.09

TorqueSafe™ FEMALE SPIGOT SPRINKLER HEAD ADAPTER
Gasket Sealed Brass Thread Insert Style
Spigot x Gasket Fipt
With Elastomer Seal - Use NO Thread Sealant

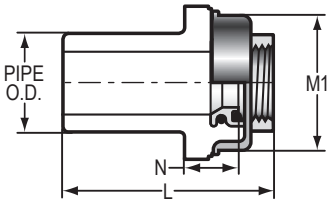

Part Number	Size	L	M	N	Approx. Wt. (Lbs.)
4238-101 G	3/4x1/2	1-15/16	1-3/8	21/32	.14
4238-130 G	1x1/2	2-1/16	1-3/8	19/32	.15

Not intended to convey or dispense water for human consumption through drinking or cooking

FIELD SET TFM# 21689-A, 21689-B, 21689-C PROJECT# 2025-11-03-04

THESE PLANS AND SPECIFICATIONS ARE REQUIRED TO BE KEPT ON THE JOB SITE AT ALL TIMES OF OCCUPANCY FOR THE PURPOSE OF A FINAL INSPECTION AND COMPLETION FORM IS ISSUED BY THE OFFICE
No alterations, deletions, additions or modifications of any kind are allowed to this approved set without written permission of the office.
TENNESSEE STATE FIRE MARSHAL'S OFFICE

SPIGOT FEMALE SPRINKLER HEAD ADAPTER
Brass Thread Insert Style
Spigot x Fipt

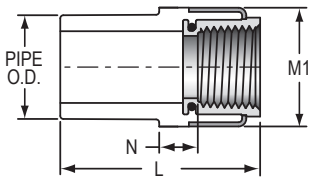

Part Number	Size	L	M1	N	Approx. Wt. (Lbs.)
4238-101	3/4x1/2	1-15/16	1-17/32	17/32	.18
4238-130	1x1/2	2-1/4	1-3/16	11/32	.19

Not intended to convey or dispense water for human consumption through drinking or cooking

TorqueSafe™ BUSHING - GASKET SEALED
Brass Thread Insert Style
Spigot x Gasket FIPT
With Elastomer Seal - Use NO Thread Sealant

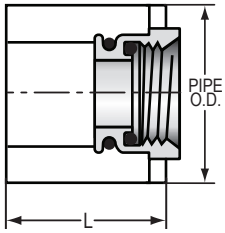

Part Number	Size	L	Approx. Wt. (Lbs.)
4238-130BR G	1x1/2	1-7/32	.10

Not intended to convey or dispense water for human consumption through drinking or cooking

BUSHING with BRASS THREAD INSERT
Spigot x Fipt

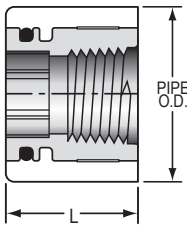

Part Number	Size	L	Approx. Wt. (Lbs.)
4238-130BR	1x1/2	1	.13

Not intended to convey or dispense water for human consumption through drinking or cooking

SPIGOT FEMALE SPRINKLER HEAD ADAPTER
Special Reinforced Plastic Thread Style
Spigot x SR Fipt

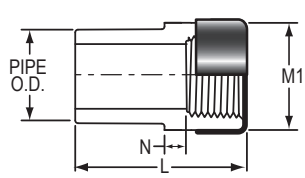

Part Number	Size	L	M1	N	Approx. Wt. (Lbs.)
4238-101SR	3/4x1/2	1-29/32	1-7/32	1/8	.07
4238-130SR	1x1/2	2-1/32	1-7/32	7/32	.09

FIELD SET TFM# 21689-A, 21689-B, 21689-C PROJECT# 2025-11-03-04

THESE PLANS AND SPECIFICATIONS ARE REQUIRED TO BE KEPT ON THE SITE UNTIL FINAL CERTIFICATE OF OCCUPANCY OR PROJECT COMPLETION FORM IS ISSUED BY THIS OFFICE.
No alterations, deletions, additions or applications of any kind are allowed to this approved set without written permission of this office.
TENNESSEE STATE FIRE MARSHAL'S OFFICE

MALE ADAPTER

With CPVC Lined Thread Brass Insert
Mipt x Socket

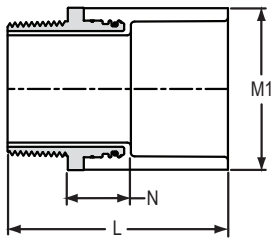

Part Number	Size	L	M1	N	Approx. Wt. (Lbs.)
4236-007	3/4	2-17/32	1-13/32	13/16	.26
4236-010	1	2-15/16	1-23/32	29/32	.43
4236-012	1-1/4	3-1/8	2-3/32	31/32	.66
4236-015	1-1/2	3-9/32	2-11/32	31/32	.80
4236-020	2	3-7/16	2-27/32	31/32	1.00

ADJUSTABLE SPRINKLER HEAD ADAPTER
Special Reinforced Plastic Thread Style

Socket x SR Fipt

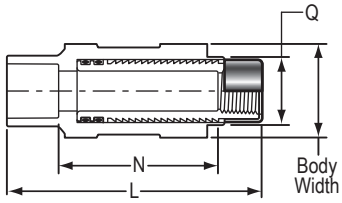

Part Number	Size	L		N		Q	Body Width	Approx. Wt. (Lbs.)
		Min	Max	Min	Max			
42001SR	3/4x1/2	6-9/32	8	4-7/16	6-1/4	1-7/16	2-3/16	.66
42011SR	1x1/2	6-13/32	8	4-1/2	6-1/8	1-7/16	2-1/8	.68

ADJUSTABLE SPRINKLER HEAD ADAPTER
Special Reinforced Plastic Thread Style

Spigot x SR Fipt

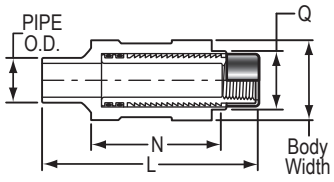

Part Number	Size	L		N		Q	Body Width	Approx. Wt. (Lbs.)
		Min	Max	Min	Max			
42004SR	3/4x1/2	5-1/32	6-5/16	3-3/16	4-15/32	1-5/16	2-1/8	.36
42014SR	1x1/2	6-7/16	8-1/8	4-7/16	6-1/4	1-7/16	2-3/16	.67

FIELD SET TFM# 21689-A, 21689-B, 21689-C PROJECT# 2025-11-03-04

THESE PLANS AND SPECIFICATIONS ARE REQUIRED TO BE KEPT ON THE JOB SITE UNTIL A FINAL CERTIFICATE OF OCCUPANCY OR PROJECT COMPLETION FORM IS ISSUED BY THIS OFFICE.
No alterations, deletions, additions or modifications of any kind are allowed to this approved set without written permission of this office.
TENNESSEE STATE FIRE MARSHAL'S OFFICE

REDUCER BUSHING
Flush Style
Spigot x Socket

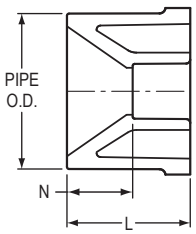

Part Number	Size	L	N	Approx. Wt. (Lbs.)
4237-131	1x3/4	1-1/4	1/4	.04
4237-167	1-1/4x3/4	1-7/16	7/16	.10
4237-168	1-1/4x1	1-13/32	9/32	.06
4237-210	1-1/2x3/4	1-5/8	5/8	.19
4237-211	1-1/2x1	1-17/32	13/32	.13
4237-212	1-1/2x1-1/4	1-9/16	5/16	.07
4237-248	2x3/4	1-29/32	29/32	.28
4237-249	2x1	1-23/32	9/16	.23
4237-250	2x1-1/4	1-11/16	7/16	.21
4237-251	2x1-1/2	1-11/16	5/16	.15
4237-290	2-1/2x1-1/4	2-5/32	7/8	.41
4237-291	2-1/2x1-1/2	2-5/32	3/4	.39
4237-292	2-1/2x2	2-9/32	3/4	.28
4237-338	3x2	2-7/32	11/16	.63
4237-339	3x2-1/2	2-5/16	1/4	.42

TRANSITION BUSHING
IPS Spigot x CTS Socket

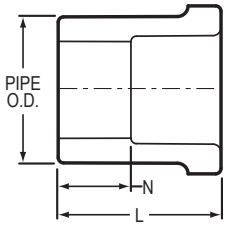

Part Number	Size	L	N	Approx. Wt. (Lbs.)
4240-101	3/4x1/2	1-1/8	5/8	.03
4240-130	1x1/2	1-1/4	23/32	.05

CAP
Socket

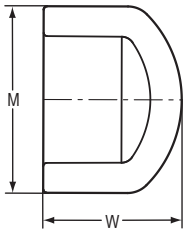

Part Number	Size	M	W	Approx. Wt. (Lbs.)
4247-007	3/4	1-5/16	1-5/16	.04
4247-010	1	1-5/8	1-9/16	.06
4247-012	1-1/4	2-3/32	1-27/32	.13
4247-015	1-1/2	2-11/32	2	.17
4247-020	2	2-27/32	2-9/32	.39
4247-025	2-1/2	3-17/32	2-5/8	.50
4247-030	3	4-3/8	3	.92

FIELD SET TFM# 21689-A, 21689-B, 21689-C PROJECT# 2025-11-03-04

THESE PLANS AND SPECIFICATIONS ARE REQUIRED TO BE KEPT ON THE JOB SITE UNTIL A FINAL CERTIFICATE OF OCCUPANCY OR PROJECT COMPLETION FORM IS ISSUED BY THIS OFFICE.
No alterations, deletions, additions or revisions of any kind are allowed to this approved set without written permission of this office.
TENNESSEE STATE FIRE MARSHAL'S OFFICE

TEST PLUG - O-ring Sealed

Mipt - For Pressure Testing Only,
Not For use with Z4235 Series Adapters

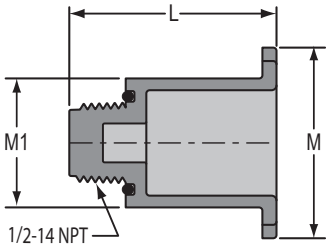

Part Number	Size	L	M	M1	Approx. Wt. (Lbs.)
FTP-005	1/2	1-27/32	1-15/16	1-7/32	.03

TEST PLUG for TorqueSafe™ Gasket Sealed Head Adapters

Mipt - For Pressure Testing Only.
Use ONLY with Gasket Sealed Head Adapters

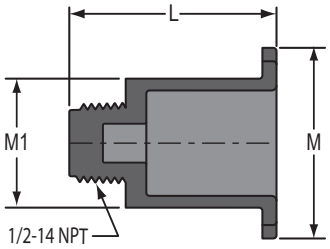

Part Number	Size	L	M	M1	Approx. Wt. (Lbs.)
FTP-005GS	1/2	1-25/32	2-1/32	1-1/4	.05

TEST PLUG

(PVC White) Not UL Listed; For Pressure Testing Only,
Mipt

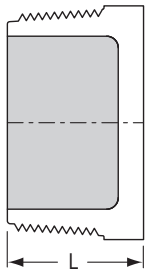

Part Number	Size	L	Approx. Wt. (Lbs.)
4250-005	1/2	27/32	.02

FIELD SET TFM# 21689-A, 21689-B, 21689-C PROJECT# 2025-11-03-04

THESE PLANS AND SPECIFICATIONS ARE REQUIRED TO BE KEPT ON THE JOB SITE UNTIL A FINAL CERTIFICATE OF OCCUPANCY OR PROJECT COMPLETION FORM IS ISSUED BY THIS OFFICE.
No alterations, deletions, additions or modifications of any kind are allowed to this approved set without written permission of this office.
TENNESSEE STATE FIRE MARSHAL'S OFFICE

FLANGE - ONE PIECE

4 Bolt Holes, 175 psi
Socket

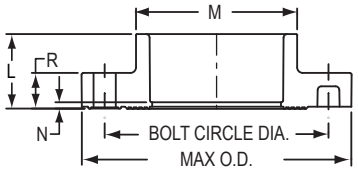

Part Number	Size	L	M	N	R	No. of Bolt Holes	Bolt Circle Dia.	Bolt Size	Min. Bolt Length	Max. O.D.	Approx. Wt. (Lbs.)
4251-007	3/4	1-5/32	1-1/2	1/8	17/32	4	2-3/4	1/2	2	3-29/32	.31
4251-010	1	1-5/16	1-13/16	1/8	11/16	4	3-1/8	1/2	2-1/4	4-9/32	.35
4251-012	1-1/4	1-13/32	2-7/32	5/32	11/16	4	3-1/2	1/2	2-1/4	4-5/8	.44
4251-015	1-1/2	1-19/32	2-1/2	3/16	23/32	4	3-27/32	1/2	2-1/2	5-1/16	.61
4251-020	2	1-27/32	3	5/16	27/32	4	4-3/4	5/8	3	5-31/32	.95
4251-025	2-1/2	2-7/32	3-1/2	7/16	1-1/32	4	5-1/2	5/8	3-1/4	7	1.50

BLIND FLANGE

4 Bolt Holes, 175 psi

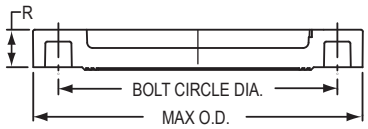

Part Number	Size	R	Bolt Circle Dia.	No. of Bolt Holes	Bolt Size	Min. Bolt Length	Max. O.D.	Approx. Wt. (Lbs.)
4253-007	3/4	17/32	2-3/4	4	1/2	2	3-27/32	.30
4253-010	1	23/32	3-1/8	4	1/2	2-1/4	4-1/4	.35
4253-012	1-1/4	21/32	3-1/2	4	1/2	2-1/4	4-5/8	.40
4253-015	1-1/2	23/32	3-27/32	4	1/2	2-1/2	5-1/16	.52
4253-020	2	27/32	4-3/4	4	5/8	3	5-31/32	.86
4253-025	2-1/2	1-1/32	5-1/2	4	5/8	3-1/4	6-15/16	1.70
4253-030	3	1-5/16	6	4	5/8	3-1/4	7-5/8	1.72

FLANGE - TWO PIECE

Van Stone Style, 4 Bolt Holes, 175 psi
Socket

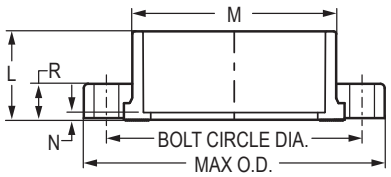

Part Number	Size	L	M	N	R	Bolt Circle Dia.	No. of Bolt Holes	Bolt Size	Min. Bolt Length	Max. O.D.	Approx. Wt. (Lbs.)
4254-030	3	2-1/8	4-1/4	9/32	1-1/32	6	4	5/8	3-1/4	7-15/32	1.75

FIELD SET TFM# 21689-A, 21689-B, 21689-C PROJECT# 2025-11-03-04

THESE PLANS AND SPECIFICATIONS ARE REQUIRED TO BE KEPT ON THE JOB SITE UNTIL A FINAL CERTIFICATE OF OCCUPANCY OR CERTIFICATE OF COMPLETION FOR THE PROJECT IS ISSUED BY THIS OFFICE.
No alterations, changes, additions or deletions of any kind are allowed to this approved set without written permission of this office.
TENNESSEE STATE FIRE MARSHAL'S OFFICE

FLANGE - TWO PIECE

Van Stone Style, 4 Bolt Holes, 175 psi
Spigot

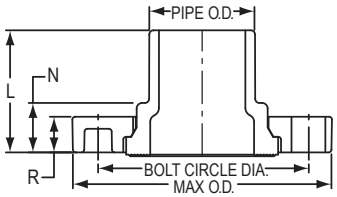

Part Number	Size	L	N	R	Bolt Circle Dia.	No. of Bolt Holes	Bolt Size	Min. Bolt Length	Max. O.D.	Approx. Wt. (Lbs.)
4256-007	3/4	1-15/16	13/16	17/32	2-3/4	4	1/2	2	3-27/32	.30
4256-010	1	2-7/32	1-1/32	11/16	3-1/8	4	1/2	2-1/4	4-1/4	.41
4256-012	1-1/4	2-3/8	1	11/16	3-1/2	4	1/2	2-1/4	4-5/8	.50
4256-015	1-1/2	2-7/16	1-3/32	23/32	3-7/8	4	1/2	2-1/2	4-31/32	.65
4256-020	2	2-3/4	1-5/32	25/32	4-3/4	4	5/8	3	5-15/16	1.00
4256-025	2-1/2	3-1/16	1-9/32	1-1/32	5-1/2	4	5/8	3-1/4	6-15/16	1.62
4256-030	3	3-3/8	1-13/32	1-1/32	6	4	5/8	3-1/4	7-9/16	1.76

TRANSITION UNION

Brass Thread Insert Style

Socket x Fipt

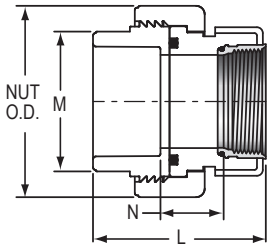

175 psi

Part Number	Size	L	M	N	Nut O.D.	Approx. Wt. (Lbs.)
4259-010BR	1	2-13/16	1-7/8	1-1/32	2-7/8	.52
4259-012BR	1-1/4	3	2-3/16	1-1/8	3-9/32	.98
4259-015BR	1-1/2	3-3/4	2-1/2	1-9/16	3-17/32	.93
4259-020BR	2	3-5/8	2-7/8	1-1/4	4-5/16	1.64

Not intended to convey or dispense water for human consumption through drinking or cooking

UNION

Socket x Socket

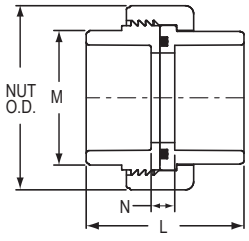

175 psi

Part Number	Size	L	M	N	Nut O.D.	Approx. Wt. (Lbs.)
4257-007	3/4	2-3/8	1-17/32	3/8	2-1/2	.38
4257-010	1	2-9/16	1-27/32	3/8	2-7/8	.41
4257-012	1-1/4	2-27/32	2-7/32	11/32	3-5/16	.52
4257-015	1-1/2	3-1/8	2-1/2	3/8	3-17/32	.63
4257-020	2	3-5/8	3-1/32	9/16	4-3/16	1.09

FIELD SET TFM# 21689-A, 21689-B, 21689-C PROJECT# 2025-11-03-04

THESE PLANS AND SPECIFICATIONS ARE RETAINED TO BE KEPT ON THE JOB SITE UNTIL A FINAL CERTIFICATE OF OCCUPANCY OR PROJECT COMPLETION FORM IS ISSUED BY THIS OFFICE.
No alteration, deletion, addition or modifications of any kind are allowed to this approved set without written permission of this office.
TENNESSEE STATE FIRE MARSHAL'S OFFICE

SofTorque™ SR FEMALE SPIGOT SPRINKLER HEAD ADAPTER

Gasket Sealed Special Reinforced Plastic Thread Style

Spigot x SR Fipt

With Elastomer Seal - Use NO Thread Sealant

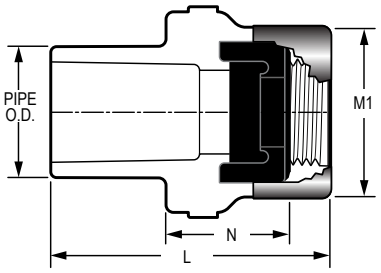

Part Number	Size	L	M1	N	Approx. Wt. (Lbs.)
4278-101GSR	3/4x1/2	2-1/4	1-3/8	1	.11

SHORT REPAIR COUPLING

Spigot x Socket

175 psi

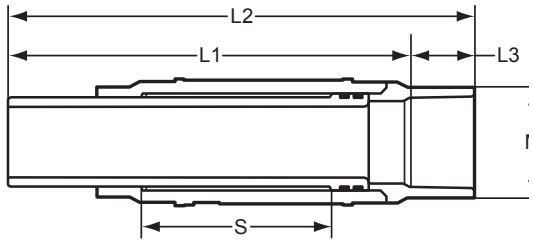

Part Number	Size	L1	L2	L3	M	S	Approx. Wt. (Lbs.)
SH118-07CO	3/4	4-13/16	5-17/32	3/4	1-3/4	2-3/16	.31
SH118-10CO	1	4-3/4	5-5/8	31/32	2-1/16	2-5/32	.40

GripLoc™ REPAIR COUPLING – LEAD FREE

w/EPDM O-Ring Seals

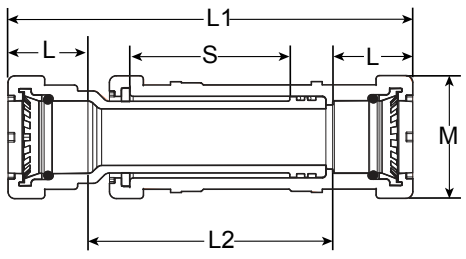

175 psi Maximum
Pressure @ 150°F

WARNING: DO NOT INSERT FINGERS.

Part Number	Size	L	L1	L2	M	S	Approx. Wt. (Lbs.)
SG118-10CO	1	1-17/32	7-17/32	4-1/4	2-1/4	2-27/32	.73

FIELD SET TFM# 21689-A, 21689-B, 21689-C PROJECT# 2025-11-03-04

THESE PLANS & SPECIFICATIONS ARE REQUIRED TO BE KEPT ON THE JOB SITE UNTIL A FINAL CERTIFICATE OF OCCUPANCY OR PROJECT COMPLETION FORM IS ISSUED BY THIS OFFICE
No alterations, deletions, additions or revisions of any kind are allowed to this approved set without written permission of this office.
TENNESSEE STATE FIRE MARSHAL'S OFFICE

FlameGuard® CPVC Drain & Swing Check Valves for NFPA 13D Applications Only

Application: FlameGuard® CPVC Orange Swing Check Valves and PVC/CPVC True Union Drain Valves are for use in configuring CPVC Fire Sprinkler System connection to water supply (riser/drain assembly) in NFPA 13D installations only. These valves are not UL Listed and NOT for use in any other locations within the fire sprinkler system.

TRUE UNION INDUSTRIAL DRAIN VALVES
CPVC Gray Valve with CPVC Orange End Connector

Socket x Socket

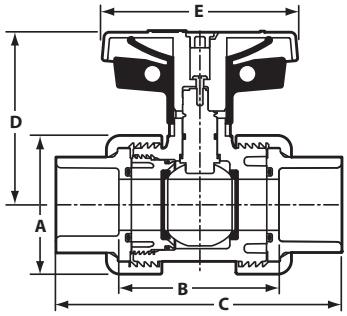

Part Number	Size	A	B	C	D	E
1822-007CFG	3/4	2-1/4	2-3/4	4-3/4	2-7/8	3-3/8
1822-010CFG	1	2-1/2	2-7/8	5-1/8	3-1/8	3-7/16
1822-012CFG	1-1/4	3-1/16	3-1/4	5-3/4	3-5/8	3-7/8
1822-015CFG	1-1/2	3-1/2	3-1/2	6-1/4	4	4-3/16
1822-020CFG	2	4-1/4	4-3/4	7-3/4	4-1/2	5-1/8
Not UL Listed						

TRUE UNION DRAIN VALVES
PVC Valve with CPVC End Connector

Socket x Socket

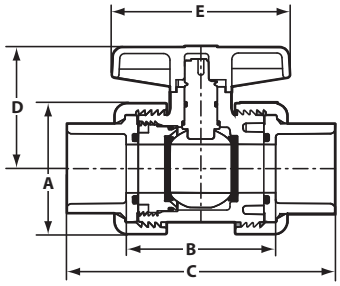

Part Number	Size	A	B	C	D	E
3622-007FG	3/4	2-1/4	2-3/4	4-3/4	2	3
3622-010FG	1	2-1/2	2-7/8	5-1/8	2-5/16	3-7/16
Not UL Listed						

FIELD SET TFM# 21689-A, 21689-B, 21689-C PROJECT# 2025-11-03-04

THESE PLANS AND SPECIFICATIONS ARE REQUIRED TO BE KEPT ON THE JOB SITE UNTIL A FINAL CERTIFICATE OF OCCUPANCY OR PROJECT COMPLETION FORM IS ISSUED BY THIS OFFICE.
No alterations, deletions, additions or modifications of any kind may be allowed to this approved set without written permission of this office.
TENNESSEE STATE FIRE MARSHAL'S OFFICE

COMPACT 2000 DRAIN VALVE

Socket x Socket

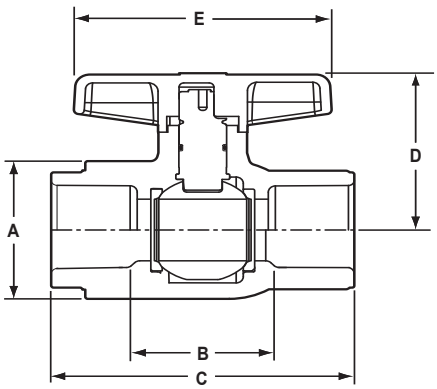

Part Number	Size	A	B	C	D	E
6622-007CO	3/4	1-13/16	1-1/2	3-9/16	2	3
6622-010CO	1	2-1/16	1-3/4	4	2-5/16	3-7/16

Not UL Listed

CPVC SWING CHECK VALVES

Socket x Socket

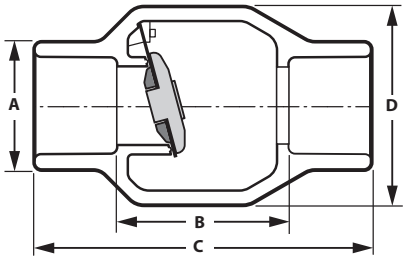

Part Number	Size	A	B	C	D	Approx. Wt. (Lbs)
S1520-10CO	1	1-11/16	2-5/16	4-9/16	2-5/8	.33
S1520-12CO	1-1/4	2-1/16	2-15/16	5-1/2	3-3/8	.42
S1520-15CO	1-1/2	2-7/16	3	5-5/8	3-3/8	.89

Not UL Listed

CPVC SPECIAL REINFORCED THREAD INLET SWING CHECK VALVES

SR Fipt x Socket

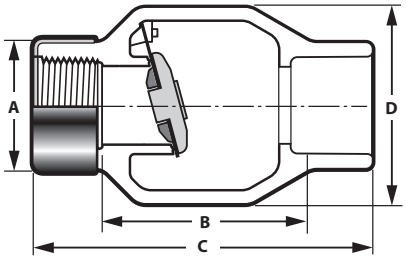

Part Number	Size	A	B	C	D	Approx. Wt. (Lbs)
S1520-10FSRSCO	1	1-11/16	2-15/16	4-9/16	2-5/8	.33
S1520-12FSRSCO	1-1/4	2-1/16	3-5/8	5-1/2	3-3/8	.42
S1520-15FSRSCO	1-1/2	2-7/16	3-11/16	5-5/8	3-3/8	.89

Not UL Listed

FIELD SET TFM# 21689-A, 21689-B, 21689-C PROJECT# 2025-11-03-04

THESE PLANS AND SPECIFICATIONS ARE REQUIRED TO BE KEPT ON THE JOB SITE UNTIL A FINAL CERTIFICATE OF OCCUPANCY OR PROJECT COMPLETION FORM IS ISSUED BY THIS OFFICE.
No alterations, additions or deletions of any kind are allowed to this approved drawing without written permission of this office.
TENNESSEE STATE FIRE MARSHAL'S OFFICE

NOTES

FIELD SET TFM# 21689-A, 21689-B, 21689-C PROJECT# 2025-11-03-04

THESE PLANS AND SPECIFICATIONS ARE REQUIRED TO BE KEPT ON THE JOB SITE UNTIL A FINAL CERTIFICATE OF OCCUPANCY OR PROJECT COMPLETION FORM IS ISSUED BY THIS OFFICE.
No alterations, deletions, additions or modifications of any kind are allowed to this approved set without written permission of this office.
TENNESSEE STATE FIRE MARSHAL'S OFFICE

NOTES

FIELD SET TFM# 21689-A, 21689-B, 21689-C PROJECT# 2025-11-03-04

THESE PLANS AND SPECIFICATIONS ARE REQUIRED TO BE KEPT ON THE JOB SITE UNTIL A FINAL CERTIFICATE OF OCCUPANCY OR PROJECT COMPLETION FORM IS ISSUED BY THIS OFFICE.
No alterations, deletions, additions or modifications of any kind are allowed to this approved set without written permission of this office.
TENNESSEE STATE FIRE MARSHAL'S OFFICE

PRODUCT LIMITED LIFETIME WARRANTY

Except as otherwise specified for certain products, mandated by law or herein provided, Spears® Manufacturing Company ("Company") warrants Standard Catalog Products ("Products") which have been directly manufactured by them to be free from defects in material and workmanship for as long as the original intended end user of the Products ("End User") retains ownership and possession of the Products and complies with this Warranty ("Warranty Period"). Each other person or entity acquiring or employing the Products, including buyers, contractors and installers ("Buyer") and End Users ("Buyer/End User") agrees that this Warranty shall be effective only during the Warranty Period so long as the Products are used solely for the normal purposes for which they are intended and in conformance with industry established standards, engineering, installation, operating, and maintenance specifications, recommendations and instructions including explicit instructions by the Company; the Products are properly installed, operated and used, and have not been modified; and all the other terms of this Warranty are complied with. Any violation thereof shall void this Warranty and relieve Company from all obligations arising from this Warranty and the Products.

Upon receipt or discovery of any Products that appear questionable or defective each Buyer/End User shall promptly inspect and return any such Product to the Company at 15853 Olden Street, Sylmar, California 91342, accompanied by a letter stating the nature of any problems. If the Products are determined by Company to be defective in materials or workmanship directly provided by Company, Company, at its sole option, may either repair or replace the defective Products, or reimburse applicable Buyer/End User for the cost of such Products. The applicable Buyer/End User shall bear all applicable shipping costs. THIS SHALL BE BUYERS/END USERS' SOLE REMEDY. EACH BUYER/END USER AGREES THAT COMPANY WILL NOT BE RESPONSIBLE FOR ANY OTHER OBLIGATIONS RELATING TO THE PRODUCTS, INCLUDING ANY OTHER MATERIALS OR LABOR COSTS, LOSS OF USE OR ANY OTHER ITEM OR FOR ANY DELAYS IN COMPLYING WITH THIS WARRANTY BEYOND COMPANY'S REASONABLE CONTROL.

COMPANY SHALL NOT BE LIABLE FOR, DOES NOT ASSUME, AND EXPRESSLY DISCLAIMS, ANY LIABILITY, RESPONSIBILITY AND DAMAGES: DUE TO ANY BUYER/END USER'S FAILURE TO COMPLY WITH THIS WARRANTY, INCLUDING IMPROPER INSTALLATION, USE OR OPERATION; USE WITH PRODUCTS FROM OTHER MANUFACTURERS THAT DO NOT MEET ASTM OR OTHER APPLICABLE PRODUCT STANDARDS; IMPROPER CONTROL OF SYSTEM HYDRAULICS, IMPROPER WINTERIZATION PROCEDURES, IMPROPER VOLTAGE SUPPLY, CONTACT WITH INCOMPATIBLE MATERIALS OR CHEMICALS, EXCAVATION/DIGGING, EXCESSIVE WEIGHT, AND VANDALISM; DUE TO REASONABLE WEAR AND TEAR AND DUE TO ANY ACTS OF NATURE, INCLUDING LIGHTNING, EARTHQUAKES, GROUND MOVEMENT, FROST HEAVE, OR FLOODS.

COMPANY EXTENDS ONLY THIS WARRANTY AND EXPLICITLY DISCLAIMS ALL OTHER WARRANTIES, WHETHER IMPLIED OR OTHERWISE EXPRESSED, WHETHER ORAL, STATUTORY OR OTHERWISE, INCLUDING ANY IMPLIED WARRANTIES OR AFFIRMATIONS FOR SUITABILITY, MERCHANTABILITY OR FITNESS FOR A PARTICULAR PURPOSE. NO AFFIRMATION BY COMPANY OR ANY OF ITS REPRESENTATIVES, BY WORDS, CONDUCT OR OTHERWISE, SHALL CONSTITUTE A WARRANTY. THIS WARRANTY MAY NOT BE TRANSFERRED, EXTENDED, ALTERED OR OTHERWISE MODIFIED IN ANY MANNER, EXCEPT BY WRITTEN AGREEMENT SIGNED BY COMPANY.

BY ITS ACCEPTANCE OF THE PRODUCTS, EACH BUYER/END USER EXPRESSLY WAIVES ALL OTHER LIABILITY OR OBLIGATION OF ANY KIND OR CHARACTER OF COMPANY, INCLUDING LIABILITY PREDICATED UPON CONTRACT, TORT, STRICT LIABILITY OR OTHER LEGAL OR EQUITABLE GROUNDS, AND ALL, IF ANY, DAMAGES AND LOSSES AS A RESULT THEREOF, INCLUDING ALL, IF ANY, COMPENSATORY, GENERAL, SPECIAL, CONSEQUENTIAL, INCIDENTAL, OR PUNITIVE DAMAGES. WITH RESPECT TO SUCH WAIVERS, EACH BUYER/END USER EXPLICITLY WAIVES CALIFORNIA CIVIL CODE §1542 WHICH STATES "A GENERAL RELEASE DOES NOT EXTEND TO CLAIMS WHICH THE CREDITOR DOES NOT KNOW OR SUSPECT TO EXIST IN HIS FAVOR AT THE TIME OF EXECUTING THIS RELEASE, WHICH IF KNOWN BY HIM MUST HAVE MATERIALLY ADVERSELY AFFECTED HIS SETTLEMENT WITH DEBTOR" AND ALL OTHER SIMILAR STATUTORY, COMMON AND CASE LAW RIGHTS, DEFENSES AND LIMITATIONS.

Having previously independently inspected the Products, or a sample, as fully as desired, or having the opportunity to and having not done so, upon acceptance of delivery of the Products, and except as otherwise herein explicitly provided, each Buyer/End User by acceptance or use of the Products accepts them in their "AS IS" and "WITH ALL FAULTS" condition without any other warranty, expressed, implied or otherwise, and accepts and assumes the entire risk and cost of all servicing, remediation and consequences thereof. This Warranty shall be governed by California law and any unenforceable provisions severed without affecting the remaining provisions. As used herein, "including" includes "without limitation."

Spears® Quality Policy

It is the policy and objective of Spears® Manufacturing Company to produce a superior quality product suitable for its intended use, with regard to functionality, structural integrity and conformance to established industry standards and practices. It is the commitment of this Company to do so in a manner which provides consistency of product quality, optimum availability, and superior customer service, while maintaining efficiency of operations and profitability necessary to perpetuate product improvement and customer satisfaction. Furthermore, it is recognized that the attainment of these objectives is the responsibility of all Company operations and personnel according to their respective functions.

The information contained in this publication is based on current information and product design at the time of publication and is subject to change without notification. Our ongoing commitment to product improvement may result in some variations. No representations, guarantees or warranties of any kind are made as to its accuracy, suitability for particular application or results to be obtained therefrom. For information not contained herein, please contact Spears® Technical Services Department [West Coast: (818) 364-1611 — East Coast: (678) 985-1263]. Reproduction of this publication in whole or in part is prohibited without the authorized consent of Spears® Manufacturing Company, Sylmar, California.

© Copyright 2014 Spears® Manufacturing Company. All Rights Reserved. Printed in the United States of America.

THESE PLANS AND SPECIFICATIONS ARE REQUIRED TO BE KEPT ON THE JOB SITE UNTIL A FINAL CERTIFICATE OF OCCUPANCY OR FINAL APPROVAL COMPLETION FORM IS ISSUED BY THIS OFFICE.
No alterations, deletions, additions or modifications of any kind are allowed to this approved set without written permission of this office.
TENNINE'S SEE STATE FIRE MARSHAL'S OFFICE

FIELD SET TFM# 21689-A, 21689-B, 21689-C PROJECT# 2025-11-03-04

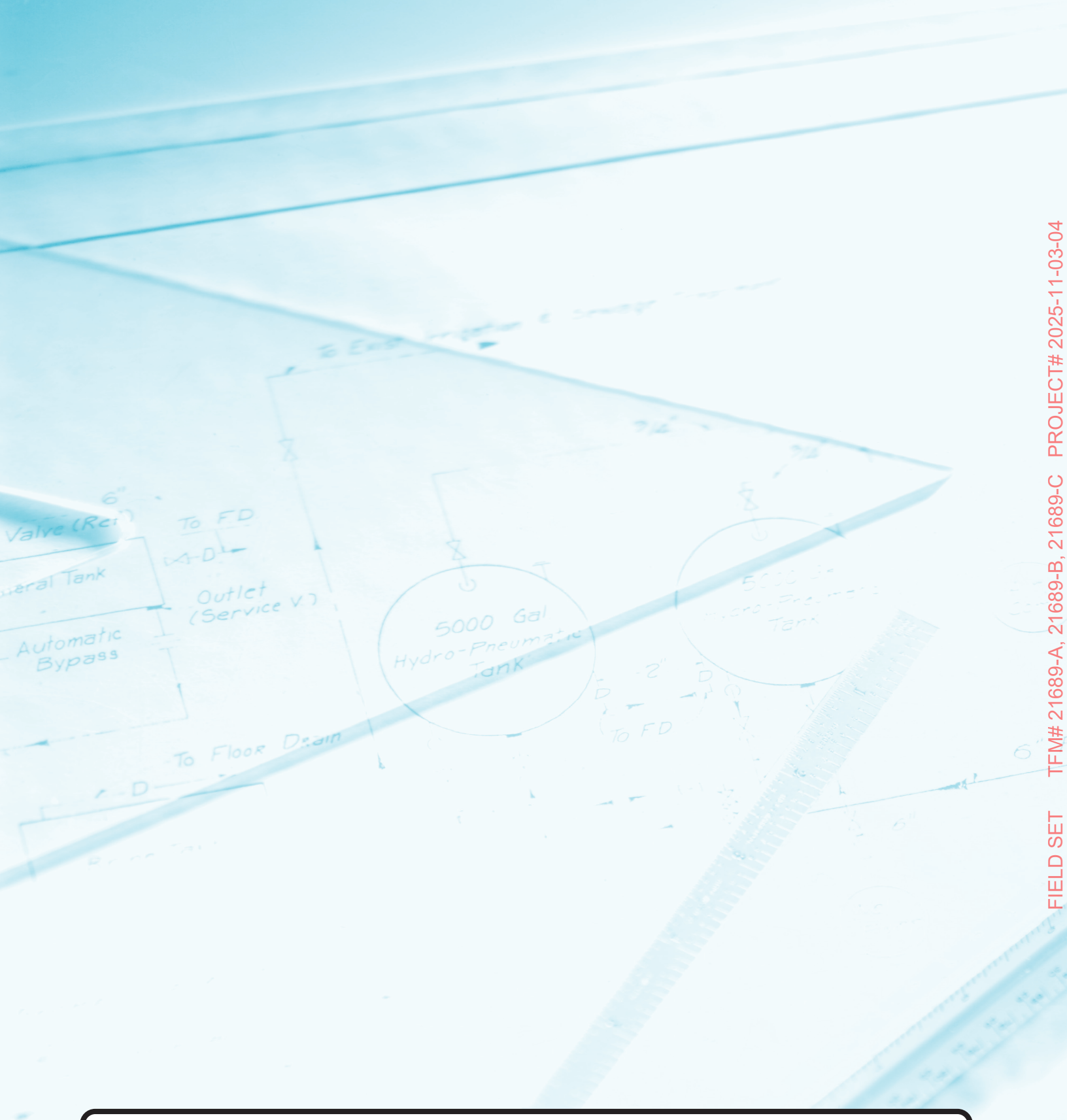

FIELD SET TFM# 21689-A, 21689-B, 21689-C PROJECT# 2025-11-03-04

SPEARS® MANUFACTURING COMPANY
Corporate Office
15853 Olden Street • Sylmar, CA 91342
PO Box 9203 • Sylmar, CA 91392
(818) 364-1611 • http://www.spearsmfg.com

MADE IN THE U.S.A. WITH PRIDE

© Copyright 2015 Spears® Manufacturing Company. All Rights Reserved. Printed in the United States of America 11/15.

FG-4-1115

THESE PLANS AND SPECIFICATIONS ARE REQUIRED TO BE KEPT ON THE JOB SITE UNTIL A FINAL CERTIFICATE OF OCCUPANCY OR PROJECT COMPLETION IS ISSUED BY THIS OFFICE.
No alterations, deletions, additions or modifications of any kind are allowed to this approved set without written permission of this office.
TENNESSEE STATE FIRE MARSHAL'S OFFICE

Electric Switches

FIELD SET TFM# 21689-A, 21689-B, 21689-C PROJECT# 2025-11-03-04

THESE PLANS AND SPECIFICATIONS ARE REQUIRED TO BE KEPT ON THE JOB SITE UNTIL A FINAL CERTIFICATE OF OCCUPANCY OR PROJECT COMPLETION FORM IS ISSUED BY THIS OFFICE.
No alterations, deletions, additions or modifications of any kind are allowed to this approved set without written permission of this office.
TENNESSEE STATE FIRE MARSHAL'S OFFICE

MODEL PS10A
PRESSURE SWITCH



PS10-1A Single Switch - Stock No. 1340101
PS10-2A Double Switch - Stock No. 1340102

UL and CSFM Listed, FM and LPC Approved, NYMEA Accepted, CE Marked

Dimensions: 4 3/4" (12,1cm)W x 2 1/4" (5,7cm)D x 4 3/8" (11,1cm)H

Enclosure: Cover - Die-cast with textured red powdercoat finish
Base - Plated Steel

Pressure Connection: 1/2" NPT Male

Factory Adjustment:
Operates on Pressure increase at 6 ±1 PSI (0,41±0,07 BAR)
Operates on Pressure decrease at 5 ±1 PSI (0,35±0,07 BAR)

Maximum Differential: 1 PSI (0,06 BAR)

Maximum System Pressure: 250 PSI (17,2 BAR)

Switch Contacts: SPDT (Form C)
15.0 Amps at 125/250VAC, 2.5 Amps at 30VDC
One set in PS10-1A, Two sets in PS10-2A

Environmental Specifications: Indoor or outdoor use
NEMA 4/IP55 Rated Enclosure - when used with proper conduit fittings
Temperature range: -40°F to 140°F (-40°C to 60°C)
(Not for use in hazardous locations)

Service Use:

Automatic Sprinkler	NFPA-13
One or two family dwelling	NFPA-13D
Residential Occupancy up to four stories	NFPA-13R
National Fire Alarm Code	NFPA-72

Tamper: Cover incorporates tamper resistant fasteners that require a special key for removal. One key is supplied with each device. For optional cover tamper switch kit, order Stock No. 0090134.

FIELD SET TFM# 21689-A, 21689-B, 21689-C PROJECT# 2025-11-03-04

INSTALLATION AND TEST PROCEDURES

The Potter PS10A Series Pressure Actuated Switches are designed for the detection of a waterflow condition in automatic fire sprinkler systems of particular designs such as wet systems with alarm check valves or dry pipe systems. They may also be used to provide a low pressure supervisory signal. They may be adjusted to operate on pressure between 4 and 20 PSI (0,27 and 0,4 BAR).

MOUNTING: Device should be mounted in upright position (threaded connection down). Requires NEMA type 4 conduit hub for outdoor installations.

TESTING: The operation of the pressure alarm switch should be tested upon completion of installation and periodically thereafter in accordance with the applicable NFPA codes and standards and/or the authority having jurisdiction (manufacturer recommends quarterly or more frequently).

WET SYSTEM:

METHOD 1: When using PS10A and control unit with retard - connect PS10A into alarm port piping on the input side of retard chamber and electrically connect PS10A to control unit that provides a retard to compensate for surges. Insure that no unsupervised shut-off valves are present between the alarm check valve and PS10A.

METHOD 2: When using the PS10A for local bell application or with a control that does not provide a retard feature - the PS10A must be installed on the alarm outlet side of the retard chamber of the sprinkler system.

TESTING: Accomplished by opening the inspector's end-of-line test valve. Allow time to compensate for system or control retard.

CAUTION: Method 2 is not applicable for remote station service use, if there is an unsupervised shut-off valve between the alarm check valve and the PS10A.

WET SYSTEM WITH EXCESS PRESSURE:

Connect PS10A into alarm port piping extending from alarm check valve. Retard provisions are not required. Insure that no unsupervised shut-off valves are present between the alarm check valve and the PS10A. TESTING: Accomplished by opening the water by-pass test valve or the inspector's end-of-line test valve. When using end-of-line test, allow time for excess pressure to bleed off.

DRY SYSTEM:

Connect PS10A into alarm port piping that extends from the intermediate chamber of the alarm check valve. Install on the outlet side of the in-line check valve of the alarm port piping. Insure that no unsupervised shut-off valves are present between the alarm check valve and the PS10A.

TESTING: Accomplished by opening the water by-pass test valve.

CAUTION: The above tests may also activate any other circuit closer or water motor gongs that are present on the system.

THESE PLANS & SPECIFICATIONS ARE REQUIRED TO BE KEPT ON THE JOB SITE UNTIL A CERTIFICATE OF OCCUPANCY OR COMPLETION IS ISSUED BY THE AUTHORITY HAVING JURISDICTION. THIS PROJECT IS APPROVED TO BE IN COMPLIANCE WITH THE 2021 NFPA CODES AND STANDARDS AS ADOPTED BY TENNESSEE STATE FIRE MARSHAL'S OFFICE
No alterations, additions or modifications of any kind are allowed to this approved set without the approval of this office. Permission

MODEL PS10A
PRESSURE SWITCH

POTTER
The Symbol of Protection

DIMENSIONS

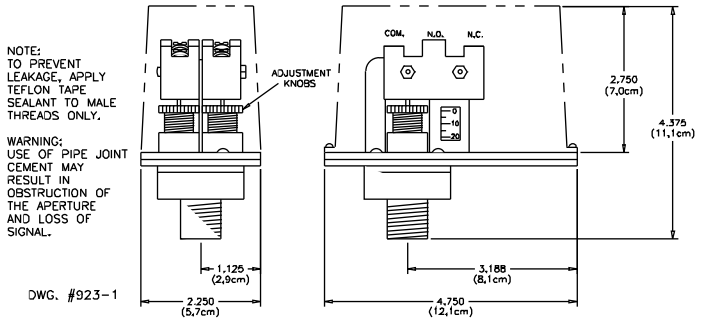

SWITCH TERMINAL CONNECTIONS
CLAMPING PLATE TERMINAL

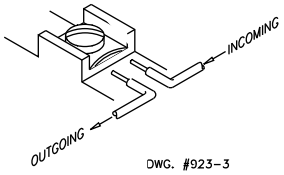

CAUTION:
An uninsulated section of a single conductor should not be looped around the terminal and serve as two separate connections. The wire must be severed, thereby providing supervision of the connection in the event that the wire becomes dislodged from under the terminal.

TYPICAL SPRINKLER APPLICATIONS

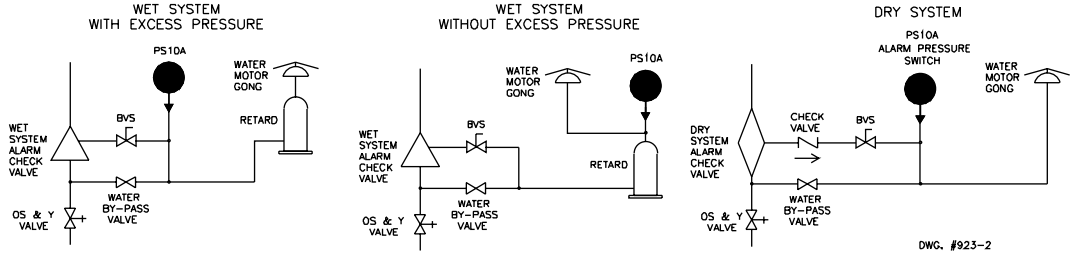

CAUTION: Closing of any shutoff valves between the alarm check valve and the PS10A will render the PS10A inoperative. To comply with NFPA-72 any such valve shall be electrically supervised with a supervisory switch such as Potter Model BVS.

TYPICAL ELECTRICAL CONNECTIONS

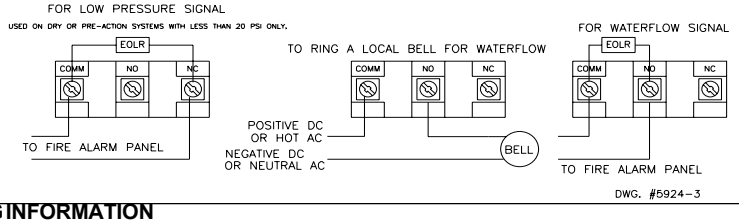

PRESSURE SWITCH TERMINATION

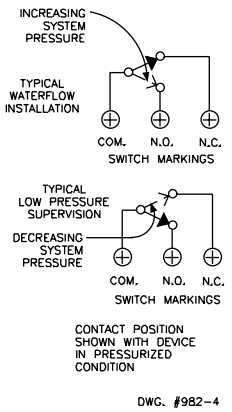

ORDERING INFORMATION

Model No.	Description	Stock
PS10-1A	Pressure switch with one set SPDT contacts	1340101
PS10-2A	Pressure switch with two sets SPDT contacts	1340102
	Hex Key	5250062
	Cover Tamper Switch Kit	0090134
BVS	1/2" Ball Valve with tamper switch	1010150

APPLICATION WARNING!

Due to the possibility of unintended discharges caused by pressure surges, trapped air, or short retard times, waterflow switches that are monitoring wet pipe sprinkler systems should not be used as the sole initiating device to discharge AFFF, deluge, or chemical suppression systems.

ENGINEER/ARCHITECT SPECIFICATIONS

Pressure type waterflow switches shall be a Model PS10A as manufactured by Potter Electric Signal Co. of St. Louis, Mo. and shall be installed on the sprinkler systems as shown on the drawings and/or specified herein.

Switches shall be provided with a 1/2" NPT male pressure connection to be connected into the alarm check valve of a “wet” sprinkler system or into the intermediate chamber of a “dry” pipe system and shall be actuated by any flow of water to or in excess of the discharge from one sprinkler head.

Switches shall have a maximum service pressure rating of 250 PSI (17,2 BAR) and shall be factory adjusted to operate on pressure increase at 6 ±1 PSI (0,4 ±0,06 BAR). There shall be one (1) or two (2) SPDT contacts rated at 15.0 Amps at 125/250VAC and 2.5 Amps at 30VDC.

The switch housing shall be weather proof and oil resistant. The cover shall incorporate tamper resistant screws.

The unit shall be UL and CSFM Listed, FM and LPC Approved, and NYMEA Accepted.

THESE PLANS AND SPECIFICATIONS ARE REQUIRED TO BE KEPT ON THE JOB SITE UNTIL A FINAL CERTIFICATE OF OCCUPANCY OR PROJECT COMPLETION FORM IS ISSUED BY THE FIRE MARSHAL'S OFFICE.
No alterations, deletions or additions or modifications of any kind are allowed to this approved set without written permission of this office.
TENNESSEE STATE FIRE MARSHAL'S OFFICE

FIELD SET TFM# 21689-A, 21689-B, 21689-C PROJECT# 2025-11-03-04

MODEL PS40A

HIGH/LOW PRESSURE SWITCHES

MODEL PS40A PRESSURE SWITCH FOR MONITORING HIGH AND/OR LOW PRESSURE VARIATIONS



PS40-1A Single Switch - Stock No. 1340401

PS40-2A Double Switch - Stock No. 1340402
UL and CSFM Listed, FM and LPC Approved, NYMEA Accepted, CE Marked

Dimensions: 4 3/4" (12,1cm)W x 2 1/4" (5,7cm)D x 4 3/8" (11,1cm)H

Enclosure: Cover - Die-cast with textured red powdercoat finish.
Base - Plated Steel

Pressure Connection: 1/2" NPT Male

Factory Adjustment:
PS40-1A: Operates on decrease at 30 PSI (2,1 BAR)
PS40-2A: Operates on increase at 50 PSI (3,5 BAR), and on decrease at 30 PSI (2,1 BAR)

Pressure Range: 10 - 175 PSI (0,7 - 12,1 BAR)

Maximum Differential: Approx. 2 lbs. at 20 PSI (0,14@1,4 BAR)
5 lbs. at 175 PSI (0,35@12,1 BAR)

Maximum System Pressure: 250 PSI (17,2 BAR)

Switch Contacts: SPDT (Form C)
15.0 Amps at 125/250VAC, 2.5 Amps at 30VDC
One set in PS40-1A, Two sets in PS40-2A

Environmental Specifications:
Indoor or outdoor use
NEMA 4/IP55 Rated Enclosure - when used with proper conduit fittings
Temperature range: -40°F to 140°F (-40°C to 60°C)
(Not for use in hazardous locations)

Service Use:

Automatic Sprinkler	NFPA-13
One or two family dwelling	NFPA-13D
Residential occupancy up to four stories	NFPA-13R
National Fire Alarm Code	NFPA-72

Tamper: Cover incorporates tamper resistant fasteners that require a special key for removal. One key is supplied with each device. For optional cover tamper switch kit, order Stock No. 0090134.

The PS40A is designed as a pressure type supervisory switch. The NFPA 72, National Fire Alarm Code, requires that a low pressure signal is sent at 10 psi below normal air pressure and 10 psi above normal pressure on dry pipe valves. Therefore, the PS40-2A switches are factory set for a pressure decrease at 30 psi and a pressure increase at 50 psi with a normal air pressure of 40 psi. The switches are adjustable at any point between 10 and 175 psi.

The PS40-1A is intended for applications that are looking for a specific pressure, either increase or decrease. These applications would include monitoring city water pressure or monitoring a water tank pressure.

INSTALLATION AND TEST PROCEDURES

Mounting: The device should be mounted in the upright position (threaded connection down). Only teflon tape should be applied to the male threads. Using pipe joint cement or pipe thread compound (pipe dope) could obstruct the device and cause it to not work properly.

In outdoor applications, a NEMA type 4 conduit hub should be installed.

If the pressure needs to be adjusted from the factory settings, adjust the system pressure to the desired trip point. Use a ohm meter on the appropriate contacts (COM and NC for pressure decrease and COM and NO for pressure increase). Adjust the knurled knob until the meter indicates continuity. At that point the switch is set for that particular pressure. When the adjustments are complete, raise and lower the system pressure to ensure the switch is properly set.

On dry systems, connect the PS40A in the air supply line on the system side of any shutoff and check valves.

Provisions for testing the unit without affecting the entire system can be accomplished with the installation of a Potter Bleeder Valve (Model BVL) in the line to the PS40A.

Testing: The operation of the pressure supervisory switch should be tested upon completion of installation and periodically thereafter in accordance with the applicable NFPA codes and standards and/or the authority having jurisdiction (manufacturer recommends quarterly or more frequently).

CAUTION: Testing the PS40A may activate other system connected devices.

FIELD SET TFM# 21689-A, 21689-B, 21689-C PROJECT# 2025-11-03-04

Potter Electric Signal Company • 2081 Craig Road, St. Louis, MO, 63146-4161 • Phone: 800-325-3936/Canada 888-882-1833 • www.pottersignal.com

PRINTED IN USA
MKT. #8810002 - REV U
MFG. #5400924 - 8/04

THESE PLANS & SPECIFICATIONS ARE REQUIRED TO BE KEPT ON THE JOB SITE UNTIL A CERTIFICATE OF OCCUPANCY OR COMPLETION IS ISSUED BY THE AUTHORITY HAVING JURISDICTION. No alterations, additions or modifications of any kind are to be made to this approved set without the approval of this office. TENNESSEE STATE FIRE MARSHALL'S OFFICE

MODEL PS40A

HIGH/LOW PRESSURE SWITCHES

DIMENSIONS

NOTE:
TO PREVENT LEAKAGE, APPLY TEFLON TAPE SEALANT TO MALE THREADS ONLY.

WARNING:
USE OF PIPE JOINT CEMENT MAY RESULT IN OBSTRUCTION OF APERTURE AND LOSS OF SIGNAL.

FIELD ADJUSTMENTS: The operating point of the switch (or switches on the PS40-2A) can be adjusted to any point between 10 and 175 PSI (0,7 and 12,1 BAR) by turning the adjustment knob(s) clockwise to raise the actuation point, and counter-clockwise to lower the actuation point. In the case of the PS40-2A, the two switches operate completely independently of one another, and each switch may be adjusted to actuate at any point the system requires. Final adjustment should be made with a pressure gauge.

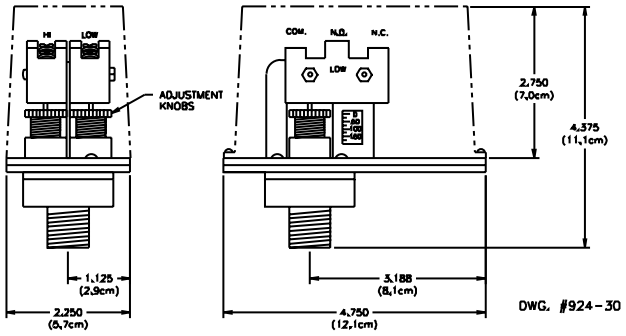

Typical Sprinkler Application - Dry System

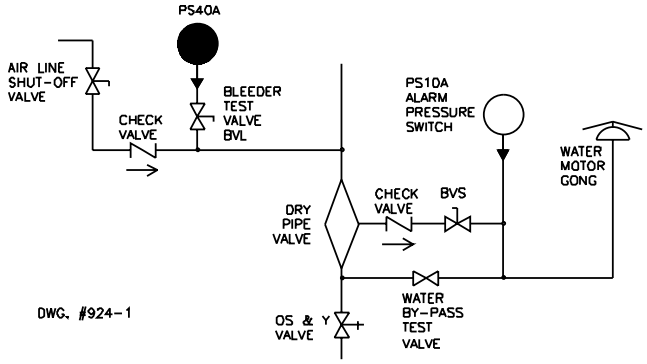

Pressure Switch Terminations

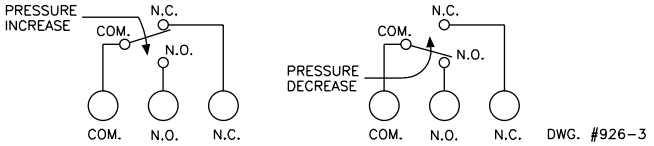

Typical Electrical Connections

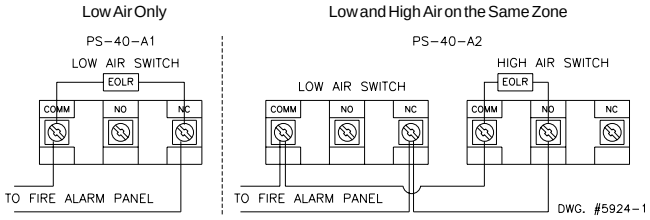

NOTE: High switch changes with pressure increase. Low switch changes with pressure decrease.

Ordering Information

Model	Description	Stk. No.
PS40-1A	Pressure switch with one set SPDT contacts	1340401
PS40-2A	Pressure switch with two sets SPDT contacts	1340402
BVL	Bleeder Valve	1000018
	Hex Key	5250062
	Cover Tamper Switch	0090134
BVS	1/2" Ball Valve with tamper switch	1010150

Switch Terminal Connections Clamping Plate Terminal

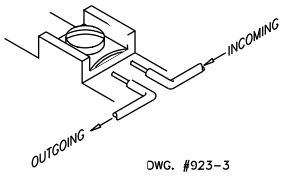

CAUTION:
An uninsulated section of a single conductor should not be looped around the terminal and serve as two separate connections. The wire must be severed, thereby providing supervision of the connection in the event that the wire becomes dislodged from under the terminal.

Engineer/Architect Specifications

Air pressure supervisory switch shall be a Model PS40A as manufactured by Potter Electric Signal Co. of St. Louis, Mo. and shall be installed on the sprinkler systems as shown on the drawings and/or as specified herein.

Switches shall be provided with a 1/2" NPT male pressure connection to be connected into the air supply line on the system side of any shut-off valve. A Model BVL bleeder valve as supplied by Potter Electric Signal Co. of St. Louis, Mo. or equivalent shall be connected in line with the PS40A to provide a means of testing the operation of the supervisory switch. (See DWG. #924-1)

The switch unit shall contain SPDT (Form C) switch(es). One switch shall operate at a pressure decrease of 10 PSI (0,7 BAR) from normal. If two switches are provided, the second switch shall operate at a pressure increase of 10 PSI (0,7 BAR) from normal. Switch contacts shall be rated at 15.0 Amps at 125/250VAC and 2.5 Amps at 30VDC. The units shall have a maximum pressure rating of 250 PSI (17,2 BAR) and shall be adjustable from 10 to 175 PSI (0,7 to 12,1 BAR).

The switch housing shall be weatherproof and oil resistant. The cover shall incorporate tamper resistant screws.

The unit shall be UL and CSFM Listed, FM and LPC Approved, and NYMEA Accepted.

FIELD SET TFM# 21689-A, 21689-B, 21689-C PROJECT# 2025-11-03-04

THESE PLANS AND SPECIFICATIONS ARE REQUIRED TO BE KEPT ON THE JOB SITE UNTIL A FINAL CERTIFICATE OF OCCUPANCY OR PROJECT COMPLETION FORM IS ISSUED BY THE FIRE MARSHAL'S OFFICE.
No alterations, additions or modifications of any kind are allowed to this approved set without written permission of this office.
TENNESSEE STATE FIRE MARSHAL'S OFFICE

POTTER
The Symbol of Protection

VSR-F

VANE TYPE WATERFLOW ALARM SWITCH WITH RETARD



U.S. Pat. No. 3921989
Canadian Pat. No. 1009680
Other Patents Pending
Potter Electric, Rd., 1990

UL, ULC and CSFM Listed, FM and LPCB Approved, NYMEA Accepted, CE Marked

Service Pressure: Up to 450 PSI (31 BAR)

Minimum Flow Rate for Alarm: 10 GPM (38 LPM)

Maximum Surge: 18 FPS (5,5 m/s)

Contact Ratings: Two sets of SPDT (Form C)
15.0 Amps at 125/250VAC
2.0 Amps at 30VDC Resistive

Conduit Entrances: Two knockouts provided for 1/2" conduit

Environmental Specifications:

- Suitable for indoor or outdoor use with factory installed gasket and die-cast housing.
- NEMA 4/IP54 Rated Enclosure - use with appropriate conduit fitting.
- Temperature Range: 40°F/120°F, 4,5°C/49°C
- Non-corrosive sleeve factory installed in saddle.

Caution: This device is not intended for applications in explosive environments.

Sizes Available: Steel Pipe schedules 10 thru 40, sizes 2" thru 8"
BS 1387 pipe 50mm thru 200mm
Note: For copper or plastic pipe use Model VSR-CF.

Service Use:

Automatic Sprinkler	NFPA-13
One or two family dwelling	NFPA-13D
Residential occupancy up to four stories	NFPA-13R
National Fire Alarm Code	NFPA-72

Optional: Cover Tamper Switch Kit, Stock No. 0090018

GENERAL INFORMATION

The Model VSR-F is a vane type waterflow switch for use on wet sprinkler systems. It is UL Listed and FM Approved for use on steel pipe; schedules 10 through 40, sizes 2" thru 8" (50mm thru 200mm).

LPC approved sizes are 2" thru 8" (50mm thru 200mm).

The unit may also be used as a sectional waterflow detector on large systems.

The unit contains two single pole, double throw, snap action switches and an adjustable, instantly recycling pneumatic retard. The switches are actuated when a flow of 10 gallons per minute (38 LPM) or more occurs downstream of the device. The flow condition must exist for a period of time necessary to overcome the selected retard period.

ENCLOSURE: The unit is enclosed in a general purpose, die-cast housing. The cover is held in place with two tamper resistant screws which require a special key for removal. A field installable cover tamper switch is available as an option which may be used to indicate unauthorized removal of the cover. See bulletin no. 5400775 for installation instructions of this switch.

INSTALLATION: See Fig.2

These devices may be mounted on horizontal or vertical pipe. On horizontal pipe they should be installed on the top side of the pipe where they will be accessible. The units should not be installed within 6" (15cm) of a fitting which changes the direction of the waterflow or within 24" (60 cm) of a valve or drain.

Drain the system and drill a hole in the pipe using a circular saw in a slow speed drill. The 2" (50mm) and 2 1/2" (65mm) devices require a hole with a diameter of 1 1/4" + 1/8" - 1/16" (33mm ±2mm). All other sizes require a hole with a diameter of 2" ±1/8" (50mm ±2mm).

Clean the inside pipe of all growth or other material for a distance equal to the pipe diameter on either side of the hole.

Roll the vane so that it may be inserted into the hole; do not bend or crease it. Insert the vane so that the arrow on the saddle points in the direction of the waterflow. Install the saddle strap and tighten nuts alternately to an eventual 50 ft-lbs. (68 n-m) of torque (see Fig. 2). The vane must not rub the inside of the pipe or bind in any way.

Specifications subject to change without notice.

FIELD SET TFM# 21689-A, 21689-B, 21689-C PROJECT# 2025-11-03-04

Potter Electric Signal Company • 2081 Craig Road, St. Louis, MO, 63146-4161 • Phone: 800-325-3936/Canada 888-882-1833 • www.pottersignal.com

THESE PLANS AND SPECIFICATIONS ARE REQUIRED TO BE KEPT ON THE JOB SITE UNTIL A FINAL CERTIFICATE OF OCCUPANCY OR PROJECT COMPLETION FORM IS ISSUED BY THE OFFICE.
No alterations, deviations, additions or modifications of any kind are allowed to this approved set without written permission of this office.
TENNNESSEE STATE FIRE MARSHAL'S OFFICE

VSR-F

VANE TYPE WATERFLOW ALARM SWITCH WITH RETARD

FIG. 1

SWITCH TERMINAL CONNECTIONS CLAMPING PLATE TERMINAL

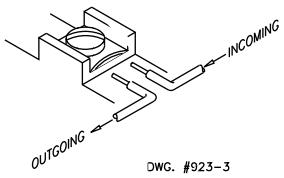

DWG. #923-3

CAUTION:
An uninsulated section of a single conductor should not be looped around the terminal and serve as two separate connections. The wire must be severed, thereby providing supervision of the connection in the event that the wire becomes dislodged from under the terminal.

FIG. 2

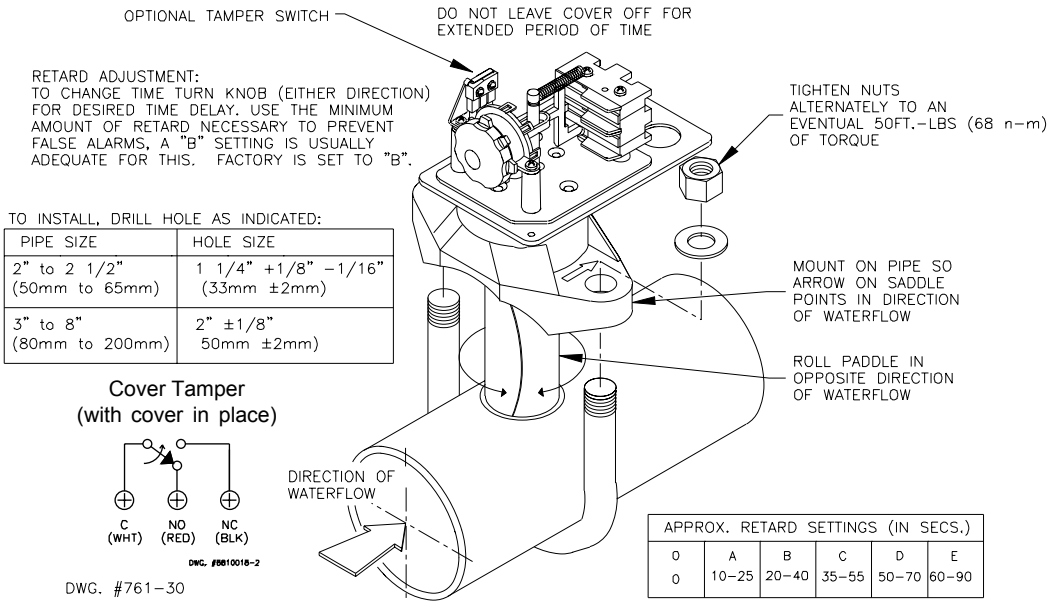

TO INSTALL, DRILL HOLE AS INDICATED:

PIPE SIZE	HOLE SIZE
2" to 2 1/2" (50mm to 65mm)	1 1/4" +1/8" -1/16" (33mm ±2mm)
3" to 8" (80mm to 200mm)	2" ±1/8" 50mm ±2mm)

Cover Tamper
(with cover in place)

DWG. #761-30

APPROX. RETARD SETTINGS (IN SECS.)					
0	A	B	C	D	E
0	10-25	20-40	35-55	50-70	60-90

FIG. 3 TYPICAL ELECTRICAL CONNECTIONS

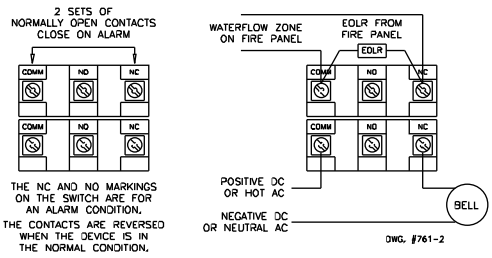

NOTES:

1. The Model VSR-F has two switches, one can be used to operate a central station, proprietary or remote signaling unit, while the other contact is used to operate a local audible or visual annunciator.
2. A condition of LPC Approval of this product is that the electrical entry must be sealed to exclude moisture.
3. For supervised circuits see "Switch Terminal Connections" drawing and caution note (Fig. 1).

FIG. 4

To remove knockouts: Place screwdriver at edge of knockouts, not in the center.

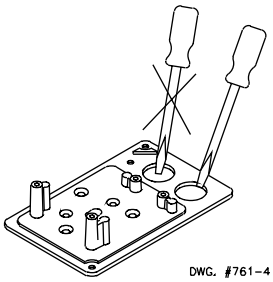

DWG. #761-4

APPLICATION WARNING!

Due to the possibility of unintended discharges caused by pressure surges, trapped air, or short retard times, waterflow switches that are monitoring wet pipe sprinkler systems should not be used as the sole initiating device to discharge AFFF, deluge, or chemical suppression systems.

TESTING

The frequency of inspection and testing for the model VSR-F and its associated protective monitoring system should be in accordance with applicable NFPA Codes and Standards and/or the authority having jurisdiction (manufacturer recommends quarterly or more frequently).

If provided, the inspector's test valve, that is usually located at the end of the most remote branch line, should always be used for test purposes. If there are no provisions for testing the operation of the flow detection device on the system, application of the VSR-F is not recommended or advisable.

A minimum flow of 10 gpm (38 Lpm) is required to activate this device.

IMPORTANT NOTICE: Please advise the person responsible for testing of the fire protection system that this system must be tested in accordance with the testing instructions.

FIELD SET TFM# 21689-A, 21689-B, 21689-C PROJECT# 2025-11-03-04

THESE PLANS AND SPECIFICATIONS ARE REQUIRED TO BE KEPT ON THE JOB SITE UNTIL A FINAL CERTIFICATE OF OCCUPANCY OR PROJECT COMPLETION FORM IS ISSUED BY THE FIRE MARSHAL'S OFFICE.
No alterations, deletions or additions or modifications of any kind are allowed to this approved set without written permission of this office.
TENNESSEE STATE FIRE MARSHAL'S OFFICE

Dry Pendent Sprinkler Heads

FIELD SET TFM# 21689-A, 21689-B, 21689-C PROJECT# 2025-11-03-04

THESE PLANS AND SPECIFICATIONS ARE REQUIRED TO BE KEPT ON THE JOB SITE UNTIL A FINAL CERTIFICATE OF OCCUPANCY OR PROJECT COMPLETION FORM IS ISSUED BY THIS OFFICE.
No alterations, deletions, additions or modifications of any kind are allowed to this approved set without written permission of this office.
TENNESSEE STATE FIRE MARSHAL'S OFFICE

Reliable®

Model F3QR56 Series Quick-Response Dry Sprinkler

K-factor 5.6 (80 metric)

Features

- Various trim options available
- Sprinklers and trim available in a wide variety of standard and special application finishes
- Listed corrosion resistant combinations of sprinkler and trim available

Product Description

Model F3QR56 dry sprinklers are Quick-Response, standard coverage sprinklers with a nominal K-factor of 5.6 (80 metric). Available in pendent, horizontal sidewall, and upright configurations, Model F3QR56 dry sprinklers utilize a 3mm glass bulb ordinary, intermediate, or high temperature classification operating element.

Model F3QR56 dry sprinklers are intended for installation on wet pipe, dry pipe, or preaction systems in accordance with NFPA 13, FM Property Loss Prevention Data Sheets, or other applicable installation standards.

Model F3QR56 dry sprinklers are available in a variety of trim options and finish combinations as shown on the following pages. The Reliable escutcheons and cover plates shown are the only escutcheons and cover plates listed for use with the sprinkler. The use of any other escutcheon or cover plate will void all guarantees, warranty, listing, and approvals.

Standard inlet fitting threads are 1" NPT or ISO7-R1 threads. An inlet fitting with 3/4" NPT or ISO7-R3/4 threads (cULus listed only) is also available for select sprinklers for replacement of existing sprinklers.

Table A provides a basic summary of Model F3QR56 dry sprinklers. Additional technical information is provided on the following individual sprinkler pages.

Important! Reliable fire sprinklers must be handled, stored, and installed in accordance with the guidelines in Caution Sheet 310 and this bulletin. Failure to follow these instructions may result in unintended operation or nonoperation of the fire protection system.

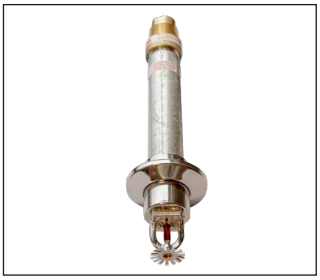
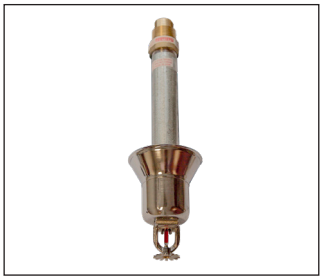
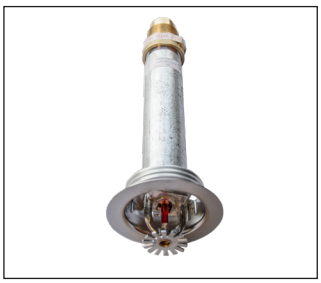

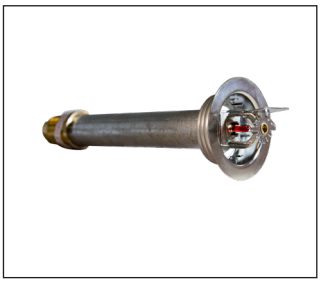


(**Note**: not all versions of sprinkler shown, please see pages 2 through 13)

Sprinkler Summary

Table A

Model	K-Factor gpm/psi$^{1/2}$ (lpm/bar$^{1/2}$)	Approvals*	Max. Working Pressure psi (bar)	Sprinkler Identification Number (SIN)
F3QR56 Dry Pendent	5.6 (80)	cULus, FM	175 (12.0) cULus 250 (17.2)	R5714
F3QR56 Dry Horizontal Sidewall	5.6 (80)	cULus, FM	175 (12.0) cULus 250 (17.2)	R5734
F3QR56 Dry Upright	5.6 (80)	cULus	175 (12.0)	R5724

***Note:** Approvals may not apply to all trim, inlet thread, temperature, and/or finish combinations. See pages 2-11 for additional technical information.

FIELD SET TFM# 21689-A, 21689-B, 21689-C PROJECT# 2025-11-03-04

THESE PLANS AND SPECIFICATIONS ARE REQUIRED TO BE KEPT ON THE JOB SITE UNTIL FINAL CERTIFICATE OF OCCUPANCY OR PROJECT COMPLETION IS ISSUED BY THIS OFFICE.
No alterations, deletions or additions or modifications of any kind are allowed to this approved set without written permission of this office.
TENNESSEE STATE FIRE MARSHAL'S OFFICE

Model F3QR56 Dry Pendent: Standard Escutcheon - SIN R5714 **Table B**

"A" Dimension in (mm)	Temperature Classification	Temperature Rating °F (°C)	Glass Bulb Color	Approvals	Sprinkler Guard
2" to 48" (51mm to 1219mm) in 1/4" (6mm) increments for 1" connections or 2" to 36" (51mm to 914mm) in 1/4" (6mm) increments for 3/4" connections	Ordinary	155°F (68°C)	Red	cULus, FM	C-2
	Intermediate	175°F (79°C)	Yellow	cULus	
		200°F (93°C)	Green	cULus, FM	
	High	286°F (141°C)	Blue	cULus, FM	



Note: Standard inlet fitting threads are 1" NPT or ISO7-R1. Inlet fitting is also available with 3/4" NPT and ISO-R3/4 threads for replacement of existing sprinklers (cULus Listed only).

Model F3QR56 Dry Pendent Sprinkler: Standard Escutcheon **Figure 1**

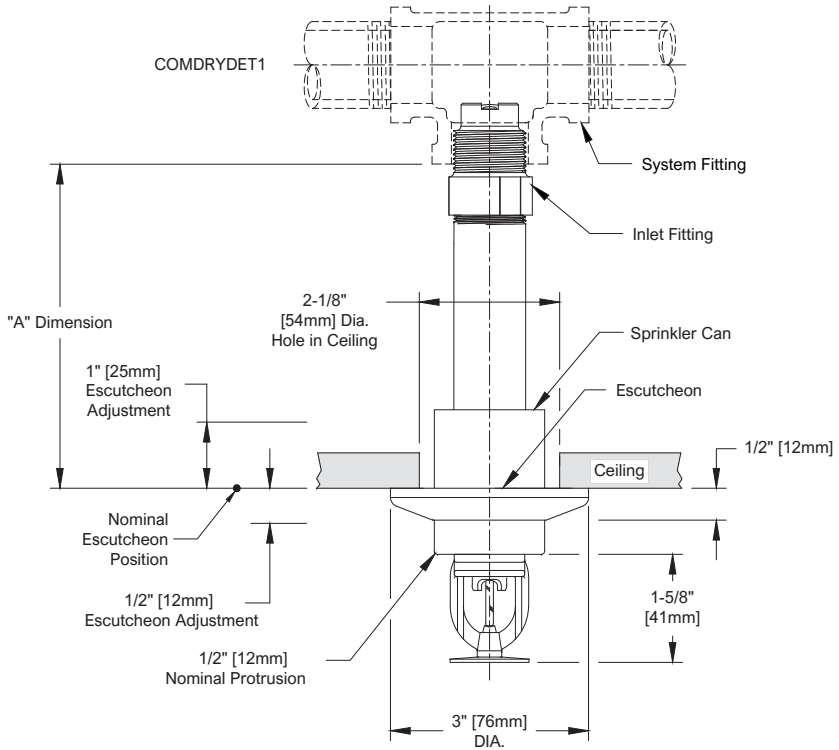

Note: The sprinkler can protrudes 1/2" (12mm) when escutcheon is in nominal position. Escutcheon adjustment provides -1/2" (12mm) to +1" (25mm) "A" dimension adjustment range.

Finish Combinations: Standard Escutcheon	
Sprinkler	**Escutcheon[2][3]**
Bronze	Polished Stainless
Bronze	Laquered Brass
Chrome	Polished Stainless
White Polyester[1]	White Polyester
Black Polyester[1]	Black Polyester
Custom Color Polyester[1]	Custom Color Polyester
Electroless Nickel PTFE[1][4]	Polished Stainless

Notes:
1. UL Listed as Corrosion Resistant.
2. Escutcheons do not carry corrosion resistant listings.
3. Base material is 316 stainless steel unless noted.
4. FM Approved as Corrosion Resistant.

FIELD SET TFM# 21689-A, 21689-B, 21689-C PROJECT# 2025-11-03-04

THESE PLANS AND SPECIFICATIONS ARE REQUIRED TO BE KEPT ON THE JOB SITE UNTIL A FINAL CERTIFICATE OF OCCUPANCY OR PROJECT COMPLETION FORM IS ISSUED BY THIS OFFICE.
No changes, deletions, additions or alterations of any kind are allowed to this approval without written permission of this office.
TENNESSEE STATE FIRE MARSHAL'S OFFICE

Model F3QR56 Dry Pendent: HB Escutcheon - SIN R5714

Table C

"A" Dimension in (mm)	Temperature Classification	Temperature Rating F (C)	Glass Bulb Color	Approvals	Sprinkler Guard
3½" to 48" (89mm to 1219mm) in 1/4" (6mm) increments for 1" connections or 3½" to 36" (89mm to 914mm) in 1/4" (6mm) increments for 3/4" connections	Ordinary	155°F (68°C)	Red	cULus, FM	C-2
	Intermediate	175°F (79°C)	Yellow	cULus	
		200°F (93°C)	Green	cULus, FM	
	High	286°F (141°C)	Blue	cULus, FM	



Note: Standard inlet fitting threads are 1" NPT or ISO7-R1. Inlet fitting is also available with 3/4" NPT and ISO-R3/4 threads for replacement of existing sprinklers (cULus Listed only).

Model F3QR56 Dry Pendent Sprinkler: HB Escutcheon

Figure 2

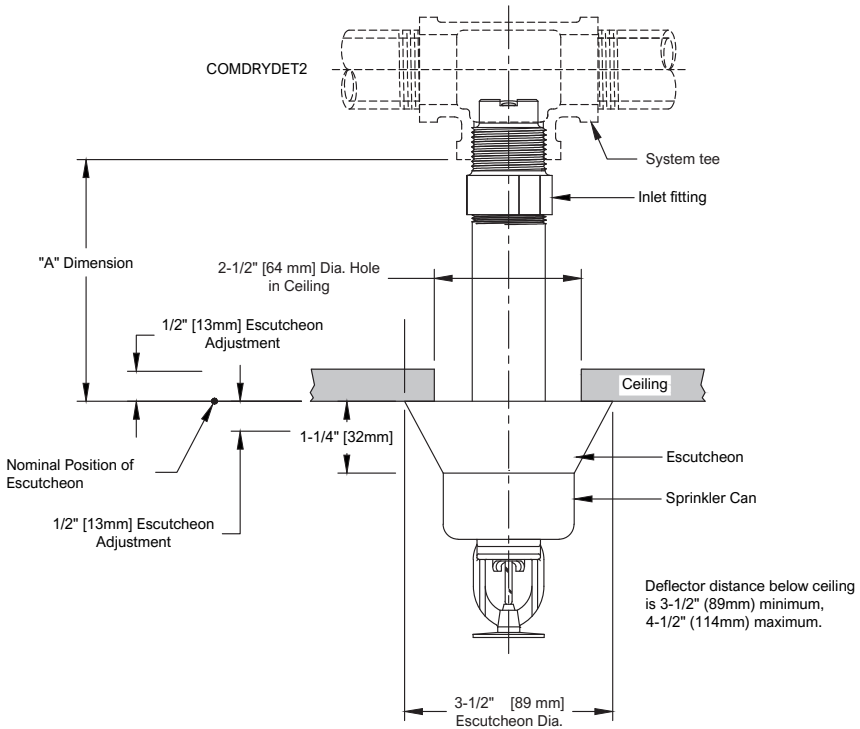

Finish Combinations: HB Escutcheon	
Sprinkler	**Escutcheon(2)(3)**
Bronze	Chrome
Chrome	Chrome
White Polyester(1)	White Polyester
Black Polyester(1)	Black Polyester
Custom Color Polyester(1)	Custom Color Polyester
Electroless Nickel PTFE(1)(4)	Stainless Steel

Notes:
1. UL Listed as Corrosion Resistant.
2. Escutcheons do not carry corrosion resistant listings.
3. Base material is cold rolled steel unless noted.
4. FM Approved as Corrosion Resistant.

Note: The sprinkler can protrudes 1¼" when escutcheon is in nominal position. Escutcheon adjustment provides -½" (-12.7mm) to +½" (+12.7mm) "A" dimension adjustment range.

FIELD SET TFM# 21689-A, 21689-B, 21689-C PROJECT# 2025-11-03-04

THESE PLANS AND SPECIFICATIONS ARE REQUIRED TO BE KEPT ON THE JOB SITE UNTIL A FINAL CERTIFICATE OF OCCUPANCY OR PROJECT COMPLETION FORM IS ISSUED BY THIS OFFICE.
No alterations, deletions, additions or modifications of any kind are allowed to this approved without written permission of this office.
TENNESSEE STATE FIRE MARSHAL'S OFFICE

Model F3QR56 Dry Pendent: FP Escutcheon - SIN R5714

Table D

"A" Dimension in (mm)	Temperature Classification	Temperature Rating °F (°C)	Glass Bulb Color	Approvals	Sprinkler Guard
3½" to 48" (89mm to 1219mm) in 1/4" (6mm) increments for 1" connections or 3½" to 36" (89mm to 914mm) in 1/4" (6mm) increments for 3/4" connections	Ordinary	155°F (68°C)	Red	cULus, FM	N/A
	Intermediate	175°F (79°C)	Yellow	cULus	
		200°F (93°C)	Green	cULus, FM	
	High	286°F (141°C)	Blue	cULus	



Note: Standard inlet fitting threads are 1" NPT or ISO7-R1. Inlet fitting is also available with 3/4" NPT and ISO-R3/4 threads for replacement of existing sprinklers (cULus Listed only).

Model F3QR56 Dry Pendent Sprinkler: FP Escutcheon

Figure 3

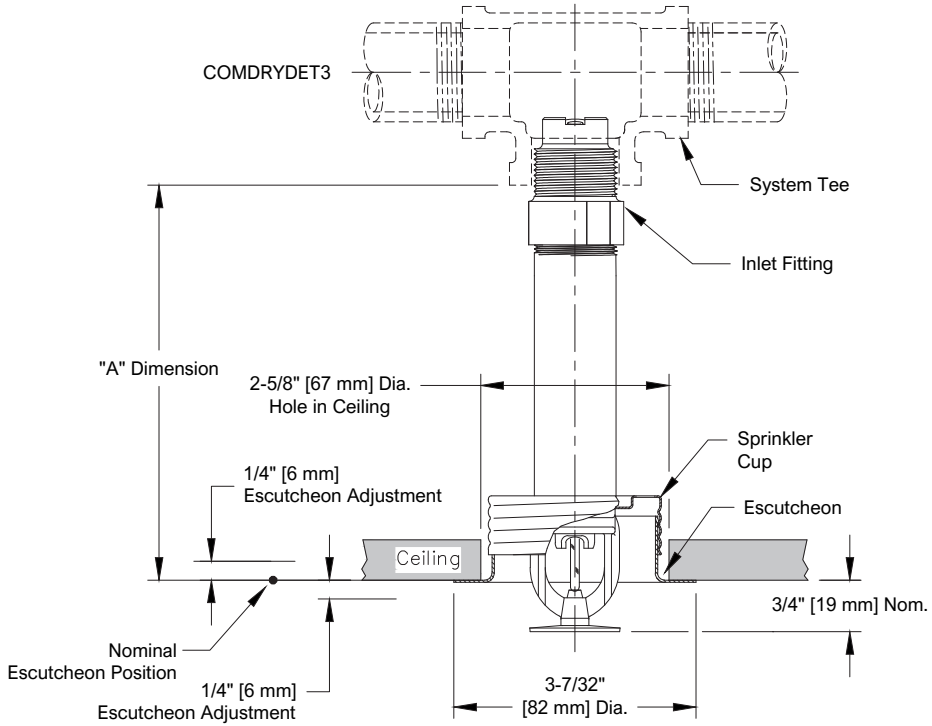

Note: Do not install the Model F3QR56 Dry Pendent sprinkler with the Model FP escutcheon in ceilings which have positive pressure in the space above.

Finish Combinations: FP Recessed	
Sprinkler(1)	**Escutcheon(3)(4)**
Bronze	Brass
Chrome	Chrome
White Polyester(2)	White Polyester
Black Polyester(2)	Black Polyester
Custom Color Polyester(2)	Custom Color Polyester
Electroless Nickel PTFE(2)(5)	Stainless Steel

Notes:
1. Cup for FP Recessed is unfinished galvanized steel except electroless nickel PTFE sprinklers which are provided with a stainless steel cup
2. UL Listed as Corrosion Resistant.
3. Escutcheons do not carry corrosion resistant listings.
4. Base material is cold rolled steel unless noted.
5. FM Approved as Corrosion Resistant.

FIELD SET TFM# 21689-A, 21689-B, 21689-C PROJECT# 2025-11-03-04

THESE PLANS AND SPECIFICATIONS ARE REQUIRED TO BE KEPT ON THE JOB SITE UNTIL A FINAL CERTIFICATE OF OCCUPANCY OR PROJECT COMPLETION FORM IS ISSUED BY THIS OFFICE.
No alterations, deletions, additions or modifications of any kind are allowed to this approved without written permission of this office.
TENNESSEE STATE FIRE MARSHAL'S OFFICE

Model F3QR56 Dry Pendent: CCP Cover Plate - SIN R5714

Table E

"A" Dimension in (mm)	Temperature Classification	Temperature Rating F (C)	Glass Bulb Color	Approvals	Sprinkler Guard
3½" to 48" (89mm to 1219mm) in 1/4" (6mm) increments for 1" connections or 3½" to 36" (89mm to 914mm) in 1/4" (6mm) increments for 3/4" connections	Ordinary	155°F (68°C)	Red	cULus, FM	N/A
	Intermediate	175°F (79°C)	Yellow	cULus	
		200°F (93°C)	Green	cULus, FM	
	High (See Caution)	286°F (141°C)	Blue	cULus	



Note: Standard inlet fitting threads are 1" NPT or ISO7-R1. Inlet fitting is also available with 3/4" NPT and ISO-R3/4 threads for replacement of existing sprinklers (cULus Listed only).

Model F3QR56 Dry Pendent Sprinkler: CCP Cover Plate

Figure 4

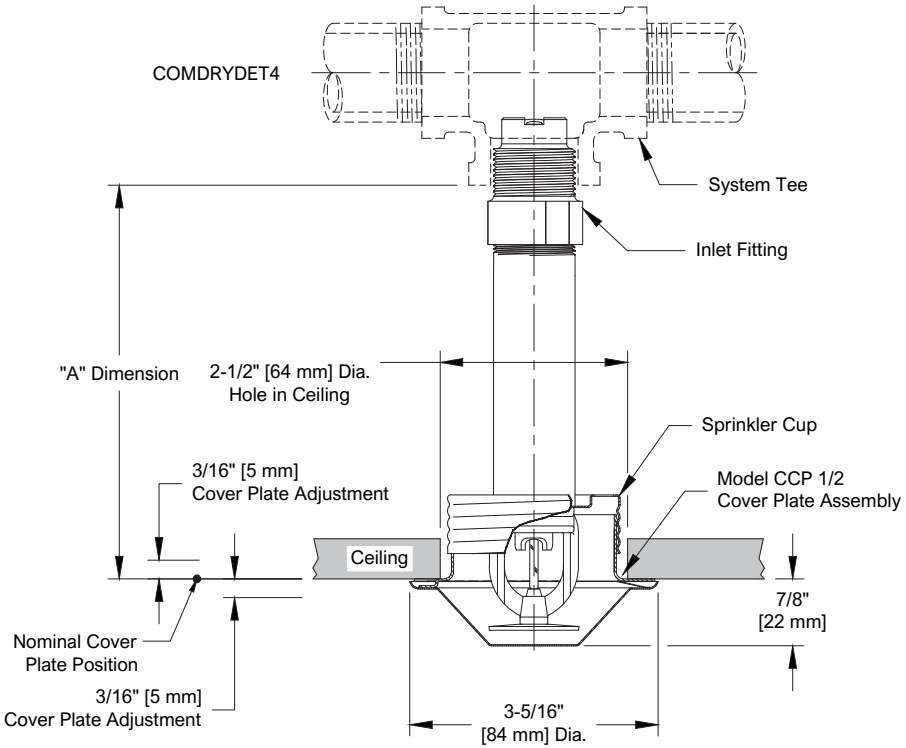

Note: Do not install the Model F3QR56 Dry Pendent sprinkler with the Model CCP cover plate in ceilings which have positive pressure in the space above.

Finish Combinations: CCP Concealed	
Sprinkler(1)	**Cover Plate(2)**
Bronze	White Polyester
	Chrome Bright
	Satin Chrome
	Bright Brass
	Unfinished Bronze
	Custom Color

Notes:
1. Cup for CCP Concealed is unfinished galvanized steel.
2. Cover plates do not carry corrosion resistant listings.

Caution: High temperature CCP sprinklers are provided with a 165°F (74°C) rated cover plate that is suitable for use where the ceiling temperature will not exceed 150°F (66°C). Do not use CCP style sprinklers where the ceiling temperature exceeds 150°F (66°C).

FIELD SET TFM# 21689-A, 21689-B, 21689-C PROJECT# 2025-11-03-04

THESE PLANS AND SPECIFICATIONS ARE REQUIRED TO BE KEPT ON THE JOB SITE UNTIL A FINAL CERTIFICATE OF OCCUPANCY OR PROJECT COMPLETION FORM IS ISSUED BY THIS OFFICE. No alterations, deletions, additions or modifications of any kind are allowed to this approved without written permission of this office. TENNESSEE STATE FIRE MARSHAL'S OFFICE

Model F3QR56 Dry Pendent: F1 Escutcheon - SIN R5714 **Table F**

"A" Dimension in (mm)	Temperature Classification	Temperature Rating °F (°C)	Glass Bulb Color	Approvals	Sprinkler Guard
3½" to 48" (89mm to 1219mm) in 1/4" (6mm) increments for 1" connections or 3½" to 36" (89mm to 914mm) in 1/4" (6mm) increments for 3/4" connections.	Ordinary	155°F (68°C)	Red	cULus, FM	N/A
	Intermediate	175°F (79°C)	Yellow	cULus	
		200°F (93°C)	Green	cULus, FM	
	High	286°F (141°C)	Blue	cULus	



Note: Standard inlet fitting threads are 1" NPT or ISO7-R1. Inlet fitting is also available with 3/4" NPT and ISO-R3/4 threads for replacement of existing sprinklers (cULus Listed only).

Model F3QR56 Dry Pendent Sprinkler: F1 Escutcheon **Figure 5**

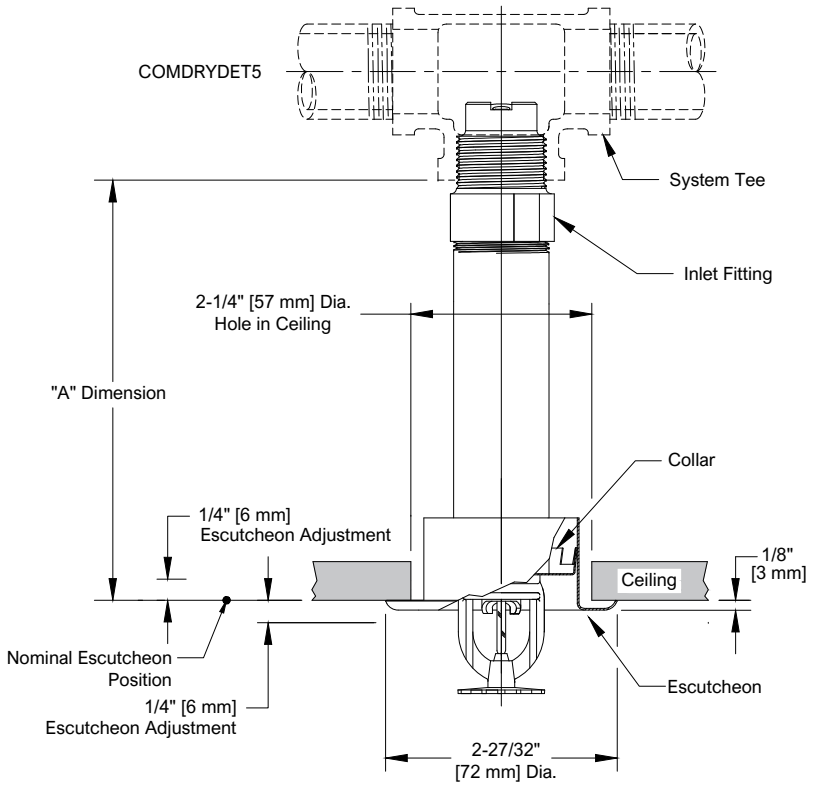

Finish Combinations: F1 Recessed	
Sprinkler	**Escutcheon[2][3]**
Bronze	Brass
Chrome	Chrome
White Polyester[1]	White Polyester
Black Polyester[1]	Black Polyester
Custom Color Polyester[1]	Custom Color Polyester
Electroless Nickel PTFE[1][4]	Stainless Steel

Notes:
1. UL Listed as Corrosion Resistant.
2. Escutcheons do not carry corrosion resistant listings.
3. Base material is cold rolled steel unless noted.
4. FM Approved as Corrosion Resistant.

FIELD SET TFM# 21689-A, 21689-B, 21689-C PROJECT# 2025-11-03-04

THESE PLANS AND SPECIFICATIONS ARE REQUIRED TO BE KEPT ON THE JOB SITE UNTIL A FINAL CERTIFICATE OF OCCUPANCY OR PROJECT COMPLETION FORM IS ISSUED BY THIS OFFICE.
Additions, deletions, additions or revisions of any kind are allowed to this approval without written permission of the STATE FIRE MARSHAL'S OFFICE.
TENNESSEE

Model F3QR56 Dry Pendent: No Escutcheon - SIN R5714

Table G

Order Dimension in (mm)	Temperature Classification	Temperature Rating °F (°C)	Glass Bulb Color	Approvals	Sprinkler Guard
5" to 48" (127mm to 1219mm) in 1/4" (6mm) increments for 1" connections or 5" to 36" (127mm to 914mm) in 1/4" (6mm) increments for 3/4" connections.	Ordinary	155°F (68°C)	Red	cULus, FM	C-2
	Intermediate	175°F (79°C)	Yellow	cULus	
		200°F (93°C)	Green	cULus, FM	
	High	286°F (141°C)	Blue	cULus, FM	



Note: Standard inlet fitting threads are 1" NPT or ISO7-R1. Inlet fitting is also available with 3/4" NPT and ISO-R3/4 threads for replacement of existing sprinklers (cULus Listed only).

Model F3QR56 Dry Pendent Sprinkler: No Escutcheon

Figure 6

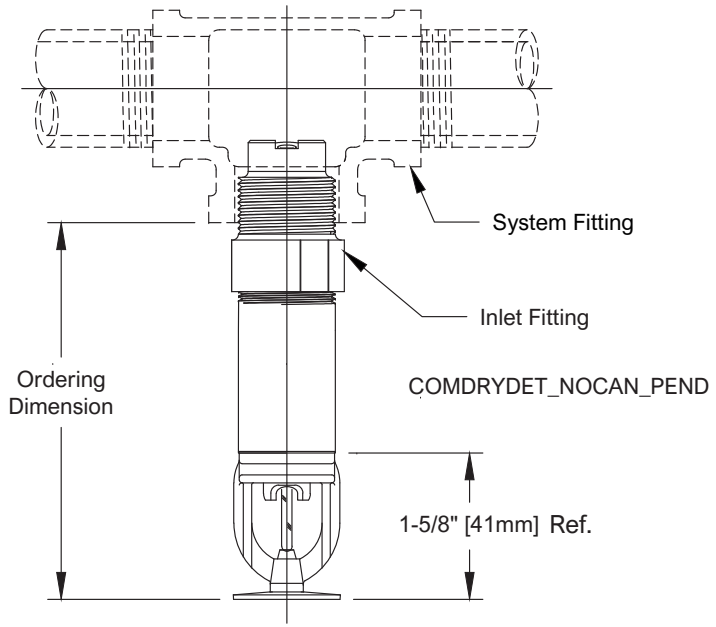

Note: Customer is responsible for determining the correct deflector distance from the ceiling or structure above.

Available Finishes: No Escutcheon
Sprinkler
Bronze
Chrome
White Polyester(1)
Black Polyester (1)
Custom Color Polyester (1)
Electroless Nickel PTFE (1)(2)

Notes:
1. UL Listed as Corrosion Resistant.
2. FM Approved as Corrosion Resistant.

FIELD SET TFM# 21689-A, 21689-B, 21689-C PROJECT# 2025-11-03-04

THESE PLANS AND SPECIFICATIONS ARE REQUIRED TO BE KEPT ON THE JOB SITE UNTIL A FINAL CERTIFICATE OF OCCUPANCY OR PROJECT COMPLETION FORM IS ISSUED BY THIS OFFICE.
No alterations, deletions, additions or modifications of any kind are allowed to this approved without written permission of this office.
TENNESSEE STATE FIRE MARSHAL'S OFFICE

Model F3QR56 Dry Horizontal Sidewall: Standard Escutcheon - SIN R5734

Table H

"A" Dimension in (mm)	Temperature Classification	Temperature Rating °F (°C)	Glass Bulb Color	Approvals (Light Hazard/HC-1 Only)	Sprinkler Guard
2" to 48" (51mm to 1219mm) in 1/4" (6mm) increments for 1" connections or 2" to 36" (51mm to 914mm) in 1/4" (6mm) increments for 3/4" connections	Ordinary	155°F (68°C)	Red	cULus, FM	C-2 (FM Only)
	Intermediate	175°F (79°C)	Yellow	cULus	
		200°F (93°C)	Green	cULus, FM	
	High	286°F (141°C)	Blue	cULus, FM	



Note: Standard inlet fitting threads are 1" NPT or ISO7-R1. Inlet fitting is also available with 3/4" NPT and ISO-R3/4 threads for replacement of existing sprinklers (cULus Listed only).

Model F3QR56 Dry Horizontal Sidewall: Standard Escutcheon

Figure 7

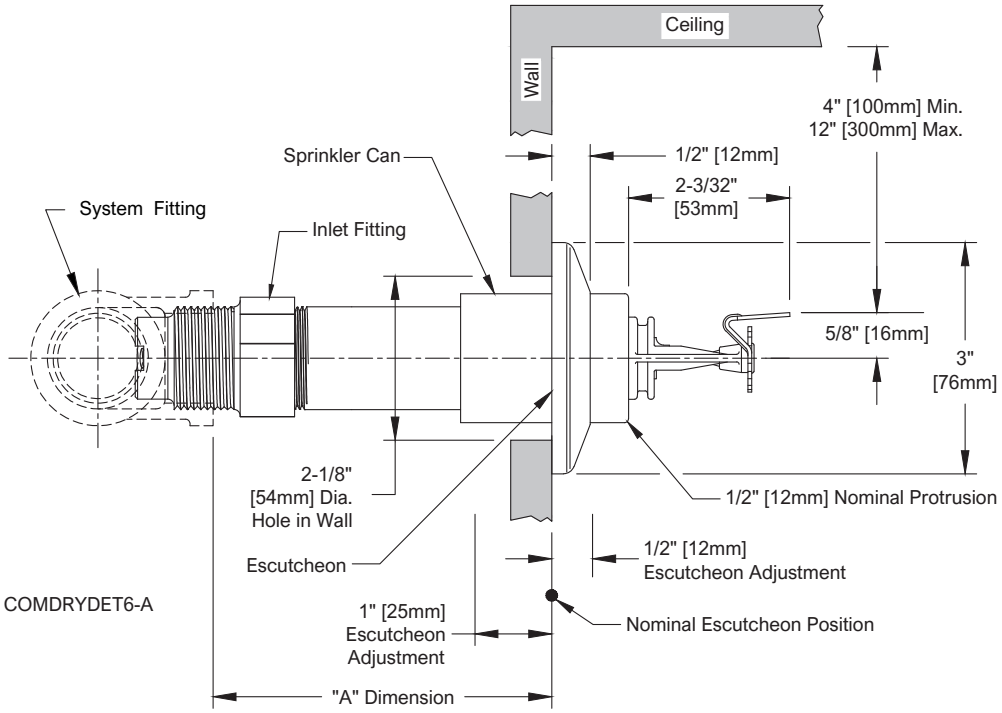

Finish Combinations: Standard Escutcheon	
Sprinkler	**Escutcheon(2)(3)**
Bronze	Polished Stainless
Bronze	Laquered Brass
Chrome	Polished Stainless
White Polyester(1)	White Polyester
Black Polyester(1)	Black Polyester
Custom Color Polyester(1)	Custom Color Polyester
Electroless Nickel PTFE(1)(4)	Polished Stainless

Notes:
1. UL Listed as Corrosion Resistant.
2. Escutcheons do not carry corrosion resistant listings.
3. Base material is 316 stainless steel unless noted.
4. FM Approved as Corrosion Resistant.

Note: The sprinkler can protrude 1/2" when escutcheon is in nominal position. Escutcheon adjustment provides -1/2" (-12mm) to +1" (25mm) "A" dimension adjustment range.

FIELD SET TFM# 21689-A, 21689-B, 21689-C PROJECT# 2025-11-03-04

THESE PLANS AND SPECIFICATIONS ARE REQUIRED TO BE KEPT ON THE JOB SITE UNTIL A FINAL CERTIFICATE OF OCCUPANCY OR PROJECT COMPLETION FORM IS ISSUED BY THIS OFFICE.
No alterations, deletions, additions or modifications of any kind are allowed to this approved without written permission of this office.
TENNESSEE STATE FIRE MARSHAL'S OFFICE

Model F3QR56 Dry Horizontal Sidewall: HB Escutcheon - SIN R5734

Table I

"A" Dimension in (mm)	Temperature Classification	Temperature Rating °F (°C)	Glass Bulb Color	Approvals (Light Hazard/HC-1 Only)	Sprinkler Guard
3½" to 48" (89mm to 1219mm) in 1/4" (6mm) increments for 1" connections or 3½" to 36" (89mm to 914mm) in 1/4" (6mm) increments for 3/4" connections	Ordinary	155°F (68°C)	Red	cULus, FM	C-2 (FM Only)
	Intermediate	175°F (79°C)	Yellow	cULus	
		200°F (93°C)	Green	cULus, FM	
	High	286°F (141°C)	Blue	cULus, FM	



Note: Standard inlet fitting threads are 1" NPT or ISO7-R1. Inlet fitting is also available with 3/4" NPT and ISO-R3/4 threads for replacement of existing sprinklers (cULus Listed only).

Model F3QR56 Dry Horizontal Sidewall: HB Escutcheon

Figure 8

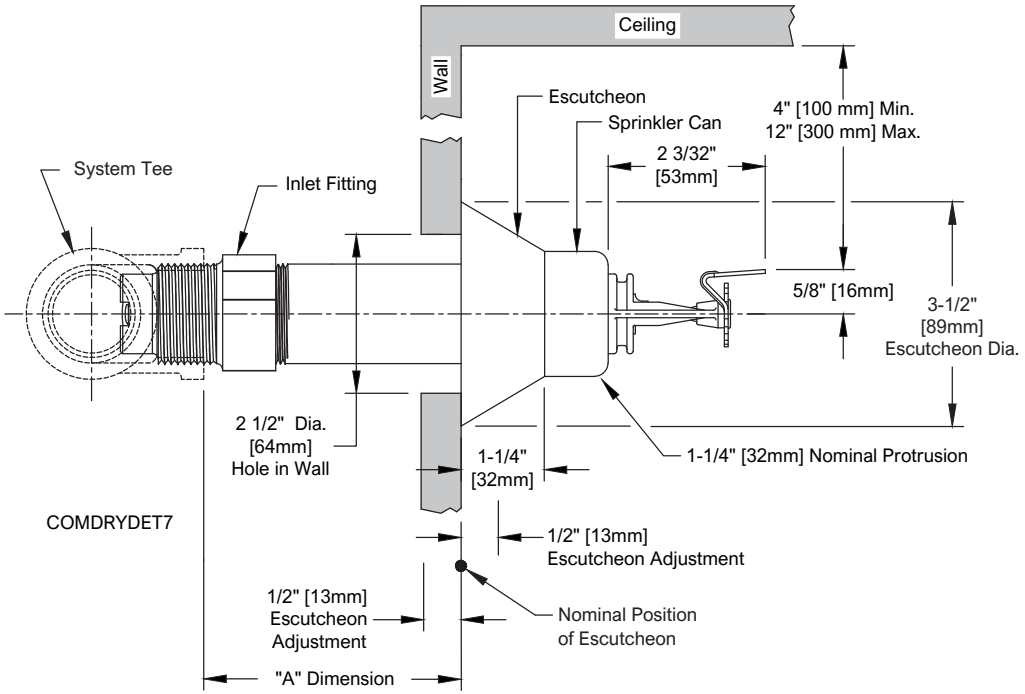

Finish Combinations: HB Escutcheon	
Sprinkler	**Escutcheon(2)(3)**
Bronze	Chrome
Chrome	Chrome
White Polyester(1)	White Polyester
Black Polyester(1)	Black Polyester
Custom Color Polyester(1)	Custom Color Polyester
Electroless Nickel PTFE(1)(4)	Stainless Steel

Notes:
1. UL Listed as Corrosion Resistant.
2. Escutcheons do not carry corrosion resistant listings.
3. Base material is cold rolled steel unless noted.
4. FM Approved as Corrosion Resistant.

Note: The sprinkler can protrudes 1¼" when escutcheon is in nominal position. Escutcheon adjustment provides -½" (-12.7mm) to +½" (+12.7mm) "A" dimension adjustment range.

FIELD SET TFM# 21689-A, 21689-B, 21689-C PROJECT# 2025-11-03-04

THESE PLANS AND SPECIFICATIONS ARE REQUIRED TO BE KEPT ON THE JOB SITE UNTIL A FINAL CERTIFICATE OF OCCUPANCY OR PROJECT COMPLETION FORM IS ISSUED BY THIS OFFICE.
No alterations, deletions, additions or modifications of any kind are allowed to this approved document without written permission of this office.
TENNESSEE STATE FIRE MARSHAL'S OFFICE

Model F3QR56 Dry Horizontal Sidewall: FP Escutcheon - SIN R5734 **Table J**

"A" Dimension in (mm)	Temperature Classification	Temperature Rating °F (°C)	Glass Bulb Color	Approvals (Light Hazard/HC-1 Only)	Sprinkler Guard
3½" to 48" (89mm to 1219mm) in 1/4" (6mm) increments for 1" connections or 3½" to 36" (89mm to 914mm) in 1/4" (6mm) increments for 3/4" connections	Ordinary	155°F (68°C)	Red	cULus, FM	N/A
	Intermediate	175°F (79°C)	Yellow	cULus	
		200°F (93°C)	Green	cULus, FM	
	High	286°F (141°C)	Blue	cULus	



Note: Standard inlet fitting threads are 1" NPT or ISO7-R1. Inlet fitting is also available with 3/4" NPT and ISO-R3/4 threads for replacement of existing sprinklers (cULus Listed only).

Model F3QR56 Dry Horizontal Sidewall: FP Escutcheon **Figure 9**

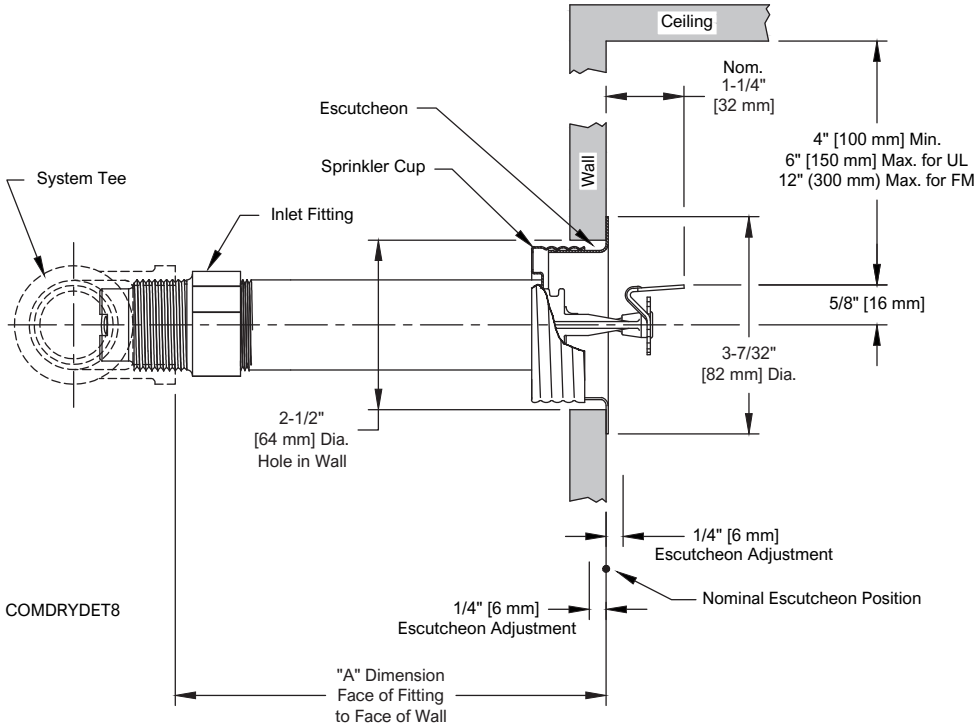

Finish Combinations: FP Recessed	
Sprinkler[1]	Escutcheon[3][4]
Bronze	Brass
Chrome	Chrome
White Polyester[2]	White Polyester
Black Polyester[2]	Black Polyester
Custom Color Polyester[2]	Custom Color Polyester
Electroless Nickel PTFE[2][5]	Stainless Steel

Notes:
1. Cup for FP Recessed is unfinished galvanized steel except electroless nickel PTFE sprinklers which are provided with a stainless steel cup
2. UL Listed as Corrosion Resistant.
3. Escutcheons do not carry corrosion resistant listings.
4. Base material is cold rolled steel unless noted.
5. FM Approved as Corrosion Resistant.

Note: Do not install the Model F3QR56 Dry Horizontal Sidewall sprinkler with the Model FP escutcheon in walls which are positively pressurized with respect to the protected space.

FIELD SET TFM# 21689-A, 21689-B, 21689-C PROJECT# 2025-11-03-04

THESE PLANS AND SPECIFICATIONS ARE REQUIRED TO BE KEPT ON THE JOB SITE UNTIL A FINAL CERTIFICATE OF OCCUPANCY OR PROJECT COMPLETION FORM IS ISSUED BY THIS OFFICE.
No additions, deletions, additions or alterations of any kind are allowed to this approval without written permission of this office.
TENNESSEE STATE FIRE MARSHAL'S OFFICE

Model F3QR56 Dry Horizontal Sidewall: F1 Escutcheon - SIN R5734

Table K

"A" Dimension in (mm)	Temperature Classification	Temperature Rating °F (°C)	Glass Bulb Color	Approvals (Light Hazard/HC-1 Only)	Sprinkler Guard
3½" to 48" (89mm to 1219mm) in 1/4" (6mm) increments for 1" connections or 3½" to 36" (89mm to 914mm) in 1/4" (6mm) increments for 3/4" connections	Ordinary	155°F (68°C)	Red	cULus, FM	N/A
	Intermediate	175°F (79°C)	Yellow	cULus	
		200°F (93°C)	Green	cULus, FM	
	High	286°F (141°C)	Blue	cULus	



Note: Standard inlet fitting threads are 1" NPT or ISO7-R1. Inlet fitting is also available with 3/4" NPT and ISO-R3/4 threads for replacement of existing sprinklers (cULus Listed only).

Model F3QR56 Dry Horizontal Sidewall: F1 Escutcheon

Figure 10

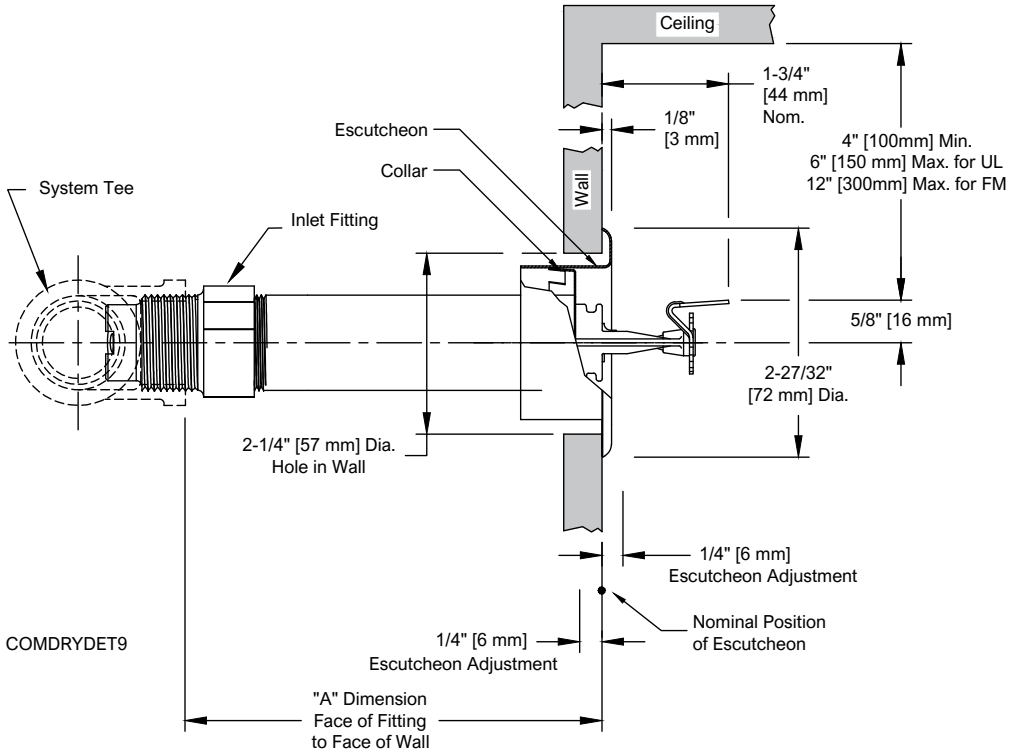

Finish Combinations: F1 Recessed	
Sprinkler	**Escutcheon(2)(3)**
Bronze	Brass
Chrome	Chrome
White Polyester(1)	White Polyester
Black Polyester(1)	Black Polyester
Custom Color Polyester(1)	Custom Color Polyester
Electroless Nickel PTFE(1)(4)	Stainless Steel

Notes:
1. UL Listed as Corrosion Resistant.
2. Escutcheons do not carry corrosion resistant listings.
3. Base material is cold rolled steel unless noted.
4. FM Approved as Corrosion Resistant.

FIELD SET TFM# 21689-A, 21689-B, 21689-C PROJECT# 2025-11-03-04

THESE PLANS AND SPECIFICATIONS ARE REQUIRED TO BE KEPT ON THE JOB SITE UNTIL A FINAL CERTIFICATE OF OCCUPANCY OR PROJECT COMPLETION FORM IS ISSUED BY THIS OFFICE.
No alterations, deletions, additions or modifications of any kind are allowed to this approved set without written permission of this office.
TENNESSEE STATE FIRE MARSHAL'S OFFICE

Model F3QR56 Dry Horizontal Sidewall: No Escutcheon - SIN R5734 **Table L**

Order Dimension in (mm)	Temperature Classification	Temperature Rating °F (°C)	Glass Bulb Color	Approvals (Light Hazard/HC-1 Only)	Sprinkler Guard
5" to 48" (127mm to 1219mm) in 1/4" (6mm) increments for 1" connections or 5" to 36" (127mm to 914mm) in 1/4" (6mm) increments for 3/4" connections	Ordinary	155°F (68°C)	Red	cULus, FM	C-2 (FM only)
	Intermediate	175°F (79°C)	Yellow	cULus	
		200°F (93°C)	Green	cULus, FM	
	High	286°F (141°C)	Blue	cULus, FM	



Note: Standard inlet fitting threads are 1" NPT or ISO7-R1. Inlet fitting is also available with 3/4" NPT and ISO-R3/4 threads for replacement of existing sprinklers (cULus Listed only).

Model F3QR56 Dry Horizontal Sidewall: No Escutcheon **Figure 11**

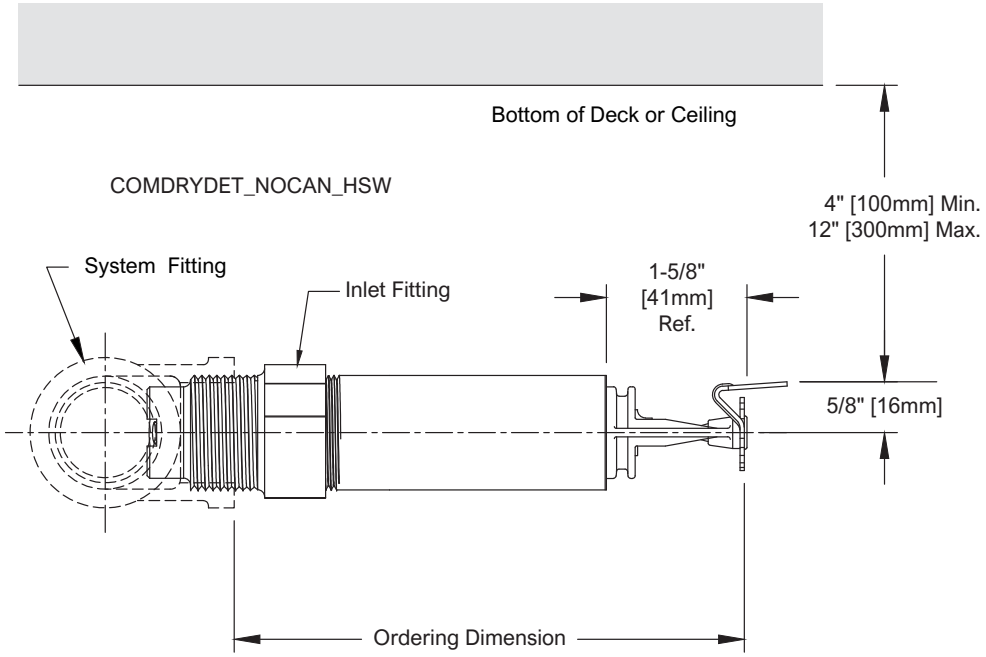

Note: Customer is responsible for determining the correct distance from the wall to the sprinkler deflector.

Available Finishes: No Escutcheon
Sprinkler
Bronze
Chrome
White Polyester[1]
Black Polyester [1]
Custom Color Polyester [1]
Electroless Nickel PTFE [1][2]

Notes:
1. UL Listed as Corrosion Resistant.
2. FM Approved as Corrosion Resistant.

FIELD SET TFM# 21689-A, 21689-B, 21689-C PROJECT# 2025-11-03-04

THESE PLANS AND SPECIFICATIONS ARE REQUIRED TO BE KEPT ON THE JOB SITE UNTIL A FINAL CERTIFICATE OF OCCUPANCY OR PROJECT COMPLETION FORM IS ISSUED BY THIS OFFICE. No additions, deletions or revisions of any kind are allowed to this approved plan without written permission from this office. STATE OF TENNESSEE OFFICE OF THE FIRE MARSHAL'S OFFICE

Model F3QR56 Dry Upright - SIN R5724

Table M

Order Dimension in (mm)	Temperature Classification	Temperature Rating °F (°C)	Glass Bulb Color	Approvals	Sprinkler Guard
5” to 48” (127 mm to 1219 mm)	Ordinary	155°F (68°C)	Red	cULus	N/A
	Intermediate	175°F (79°C)	Yellow		
		200°F (93°C)	Green		
	High	286°F (141°C)	Blue		



Model F3QR56 Dry Upright Sprinkler

Figure 12

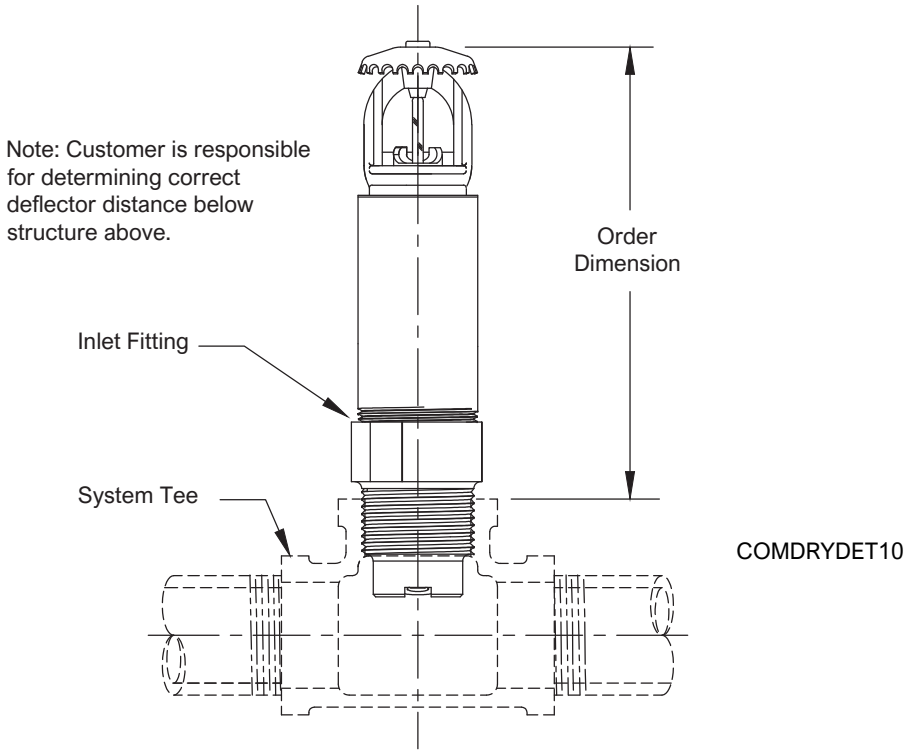

Finish Combinations: Upright	
Sprinkler	**Escutcheon**
Bronze	NA
Electroless Nickel PTFE(1)	NA

Notes:

1. UL Listed as Corrosion Resistant.

FIELD SET TFM# 21689-A, 21689-B, 21689-C PROJECT# 2025-11-03-04

THESE PLANS AND SPECIFICATIONS ARE REQUIRED TO BE KEPT ON THE JOB SITE UNTIL A FINAL CERTIFICATE OF OCCUPANCY OR PROJECT COMPLETION FORM IS ISSUED BY THIS OFFICE.
No additions, deletions, additions or revisions of any kind are allowed to this approved plan without written permission of the STATE FIRE MARSHAL'S OFFICE
TENNESSEE

Installation (General)

Dry sprinklers connected to wet pipe systems must be installed as indicated in Figure 14 and as required by NFPA 13 with the Exposed Minimum Barrel Length located in a heated area.

Reliable Model F3QR56 dry sidewall sprinklers may be installed in ductile or malleable cast iron threaded tees, or CPVC tees and adapters upon verification that the sprinkler inlet fitting does not interfere with the interior of the fitting (see Figure 15).

DO NOT install Reliable Model F3QR56 dry sidewall sprinklers into elbows or couplings, welded outlets, mechanical tees, or gasket sealed CPVC fittings.

See Figure 16 for acceptable and unacceptable installation practices.

F3QR56 with Standard Escutcheon

Cut a 2-1/8" (54mm) diameter hole in the wall as shown in Fig. 1. Apply a PTFE based sealant to the sprinkler threads before installing into the fitting. Use the Model F3R installation wrench on the square boss to tighten the sprinkler until it is secured in the sprinkler fitting. Installation is completed by removing the orange glass bulb protector and sliding the escutcheon over the finished sleeve until tight to the finished surface.

F3QR56 with HB Escutcheon

Cut a 2-1/2" (64mm) diameter hole in the wall as shown in Fig. 2. Apply a PTFE based sealant to the sprinkler threads before installing into the fitting. Use the Model F3R installation wrench on the square boss to tighten the sprinkler until it is secured in the sprinkler fitting. Installation is completed by removing the orange glass bulb protector and sliding the skirt over the finished sleeve until tight to the finished suface.

F3QR56 with FP Recessed Escutcheon

Cut a 2-5/8" (67mm) diameter hole in the wall as shown in Fig. 3. Apply a PTFE based sealant to the sprinkler threads before installing into the fitting. Use the Model XLO2 installation wrench (see Fig. 13) on the square boss to tighten the sprinkler until it is secured in the sprinkler fitting. Installation is completed by removing the orange glass bulb protector and pushing (or threading) the FP escutcheon into the threaded cup. Final adjustment is made by turning the FP escutcheon clockwise until the flange makes full contact with the wall surface.

F3QR56 CCP Concealed Cover Plate

Cut a 2-5/8" (67mm) diameter hole in the wall as shown in Fig. 4. Apply a PTFE based sealant to the sprinkler threads before installing into the fitting. Use the Model XLO2 installation wrench (see Fig. 13) on the square boss to tighten the sprinkler until it is secured in the sprinkler fitting. Installation is completed by removing the orange glass bulb protector and pushing (or threading) the SWC cover plate into the threaded cup. Final adjustment is made by turning the cover plate clockwise until the cover plate flange makes full contact with the finished surface.

Note:

1. The Model XLO2 installation wrench for recessed and concealed installations has a open side to accommodate the sprinkler deflector and can only be inserted in one way (see Figure 13). Care must be taken not to damage the deflector during installation.
2. Do not over-tighten sprinklers into fittings. It is recommended that Reliable dry sprinklers be installed using the wrench referenced in this bulletin. A pipe wrench may also be used to install dry sprinklers provided that it only engages the outer tube (steel pipe) of the assembly. Note that a pipe wrench will impart a large amount of torque into the final assembly. This torque will need to be matched or exceeded to remove the sprinkler at a later date. A leak free joint can normally be obtained by installing the sprinkler to a minimum torque of 22 ft-lb (30 N·m) after applying an appropriate thread sealant.
3. Glass bulb sprinklers have orange bulb protectors to minimize bulb damage during shipping, handling, and installation. Reliable installation wrenches are designed to install sprinklers while bulb protectors are in place. REMOVE THE PROTECTORS AT THE TIME THE SPRINKLER SYSTEM IS PLACED INTO SERVICE. Removal of the protectors before this time may leave the glass bulb vulnerable to damage. Remove protectors by undoing the clasp by hand. DO NOT USE TOOLS TO REMOVE THE PROTECTORS.
4. Do not remove the wax fillet in the gap between the cup that supports the bulb and the wrenching boss.

XLO2 Installation Procedure **Figure 13**

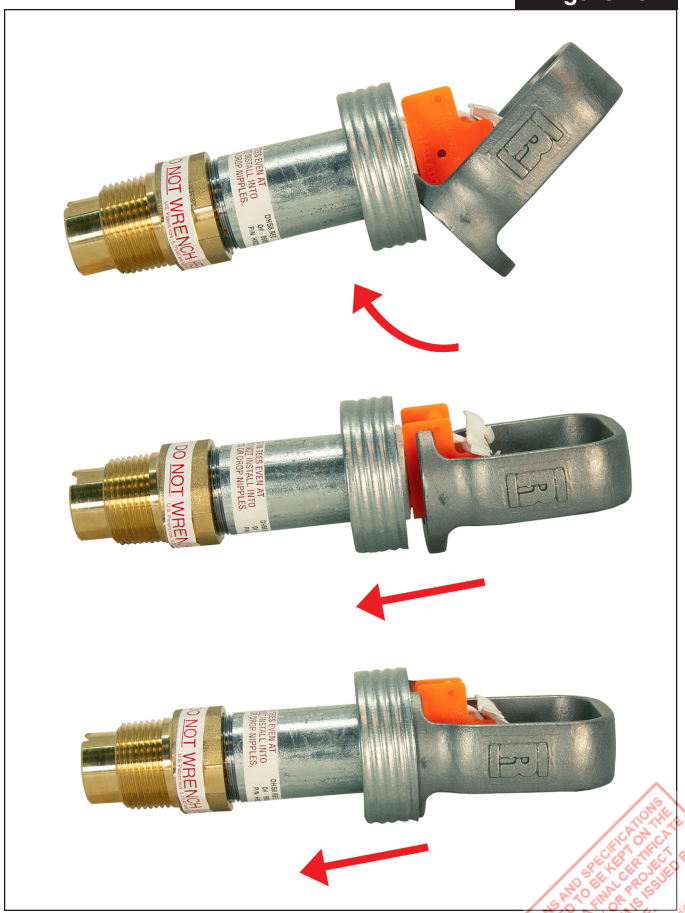

FIELD SET TFM# 21689-A, 21689-B, 21689-C PROJECT# 2025-11-03-04

THESE PLANS AND SPECIFICATIONS ARE REQUIRED TO BE KEPT ON THE JOB SITE UNTIL A FINAL CERTIFICATE OF OCCUPANCY OR PROJECT COMPLETION FORM IS ISSUED BY THIS OFFICE.
Additions, deletions, additions or changes of any kind are allowed to this approved plan without written permission of this office.
TENNESSEE STATE FIRE MARSHAL'S OFFICE

MINIMUM EXPOSED BARREL LENGTH WHEN CONNECTED TO WET PIPE SPRINKLER SYSTEM

NOTE: STANDARD DRY PENDENT IS SHOWN, HOWEVER, MINIMUM EXPOSED BARREL LENGTH APPLIES TO ALL STYLES OF DRY SPRINKLERS CONNECTED TO A WET PIPE SYSTEM.

AMBIENT TEMPERATURE EXPOSED TO DISCHARGE END OF SPRINKLER*	EXPOSED BARREL AMBIENT TEMPERATURE		
	40°F/4°C	50°F/10°C	60°F/16°C
	EXPOSED MINIMUM BARREL LENGTH** (FACE OF FITTING TO TOP OF CEILING)***		
	IN. (MM)	IN. (MM)	IN. (MM)
40°F (4°C)	0	0	0
30°F (−1°C)	0	0	0
20°F (−7°C)	4 (100)	0	0
10°F (−12°C)	8 (200)	1 (25)	0
0°F (−18°C)	12 (300)	3 (75)	0
−10°F (−23°C)	14 (350)	4 (100)	1 (25)
−20°F (−29°C)	14 (350)	6 (150)	3 (75)
−30°F (−34°C)	16 (400)	8 (200)	4 (100)
−40°F (−40°C)	18 (450)	8 (200)	4 (100)
−50°F (−46°C)	20 (500)	10 (250)	6 (150)
−60°F (−51°C)	20 (500)	10 (250)	6 (150)

* FOR AMBIENT TEMPERATURES EXPOSED TO THE DISCHARGE END OF THE SPRINKLER THAT OCCUR BETWEEN THE VALUES LISTED, USE THE NEXT COOLER TEMPERATURE.

** THE MINIMUM EXPOSED BARREL LENGTH IS NOT THE SAME AS THE "A" DIMENSION. THE MINIMUM EXPOSED BARREL LENGTH IS BASED ON A PROPERLY SEALED PENETRATION WITH A MAXIMUM WIND VELOCITY ON THE EXPOSED SPRINKLER OF 30 MPH (48 KM/H). LONGER EXPOSED BARREL LENGTHS WILL HELP AVOID FREEZING OF THE WET PIPING WHERE HIGHER WIND VELOCITY IS EXPECTED.

*** THE MINIMUM EXPOSED BARREL LENGTH IS MEASURED FROM THE FACE OF THE FITTING TO THE INSIDE FACE OF THE INSULATION, WALL, OR CEILING LEADING TO THE COLD SPACE, WHICHEVER IS CLOSEST TO THE FITTING.

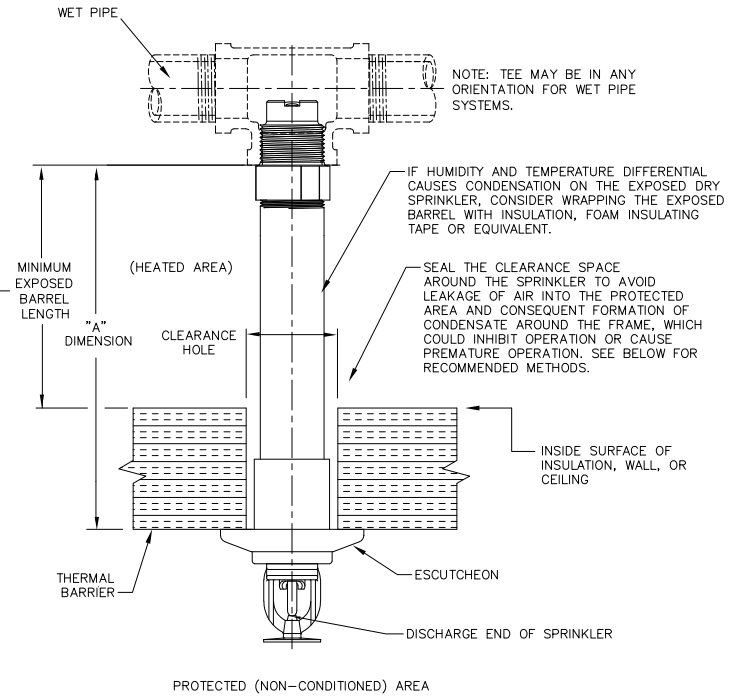

RECOMMENDED DRY SPRINKLER SEAL ARRANGEMENTS
(DRY SPRINKLER WITH STANDARD ESCUTCHEON SHOWN)

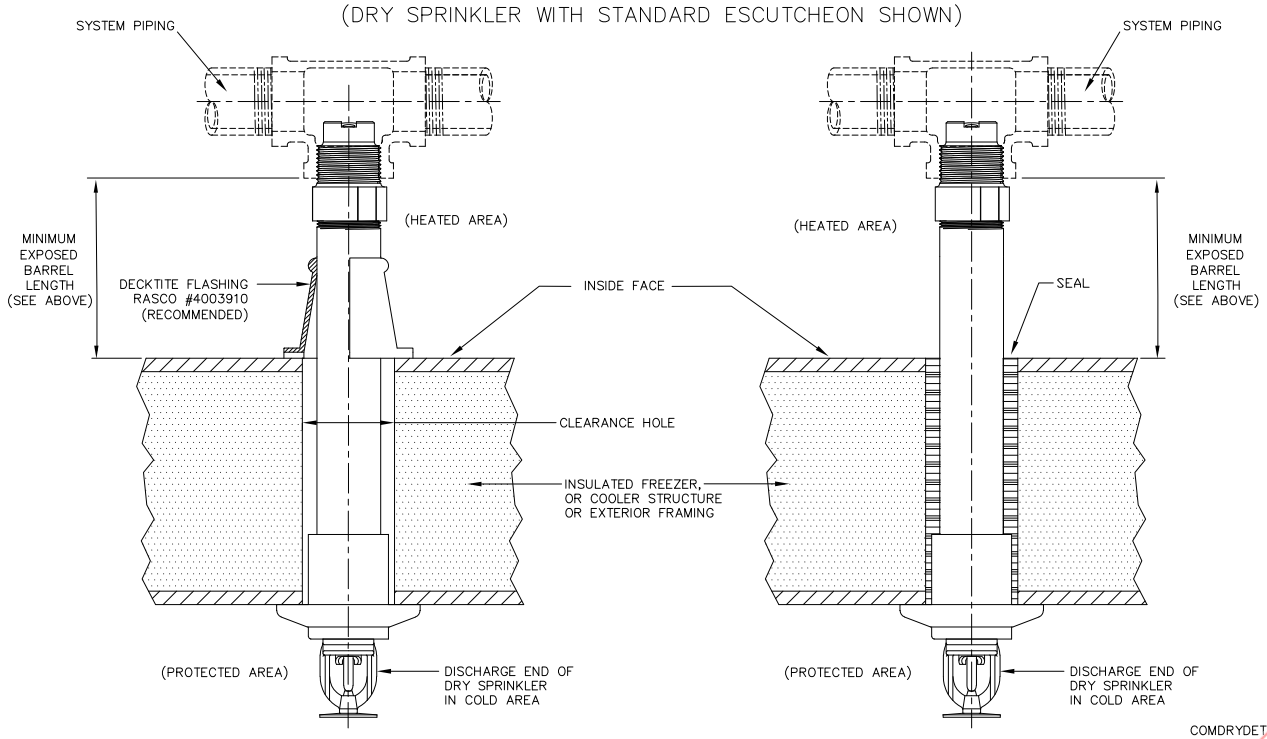

FIELD SET TFM# 21689-A, 21689-B, 21689-C PROJECT# 2025-11-03-04

THESE PLANS AND SPECIFICATIONS ARE REQUIRED TO BE KEPT ON THE JOB SITE UNTIL A FINAL CERTIFICATE OF OCCUPANCY OR PROJECT COMPLETION FORM IS ISSUED BY THIS OFFICE.
No changes, deletions, additions or modifications of any kind are allowed to this approved plan without written permission of this office.
TENNESSEE STATE FIRE MARSHAL'S OFFICE

Figure 15

CAUTION

RELIABLE DRY SPRINKLERS MAY BE INSTALLED IN A LISTED CPVC SPRINKLER FITTING, ONLY UPON VERIFICATION THAT THE FITTING DOES NOT INTERFERE WITH THE SPRINKLER'S INLET.
Do not install dry sprinklers with standard inlets into CPVC fittings that have an internal obstruction; this will damage the sprinkler, the fitting, or both.
Short inlet ("PL") versions of Reliable dry sprinklers are available that may or may not be compatible with fittings having internal obstructions in existing installations. Sprinklers with the short inlet ("PL") should only be installed in CPVC fittings of wet-pipe systems.
In all cases, verify sprinkler and fitting dimensions prior to installation to avoid interference.

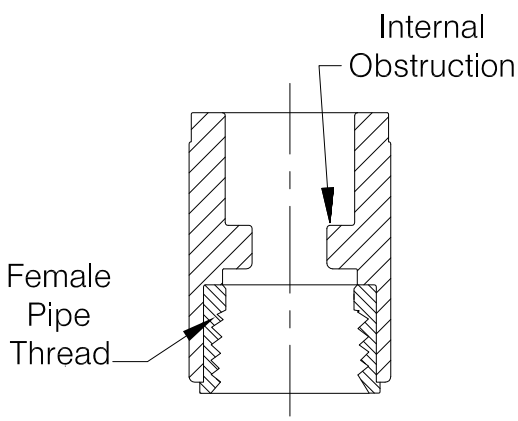

CPVC Fitting with Internal Obstruction

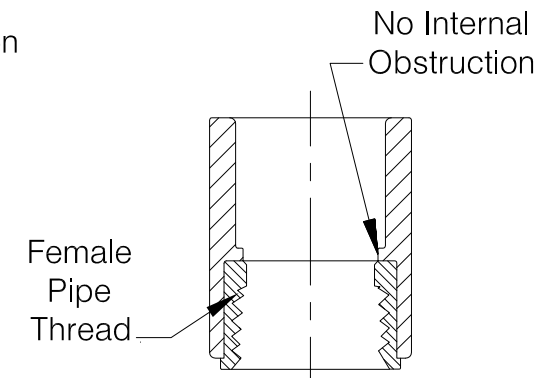

CPVC Fitting -
No Internal Obstruction

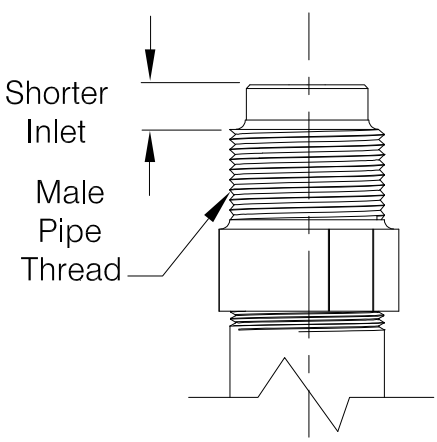

Dry Sprinkler
Short Inlet ("PL")

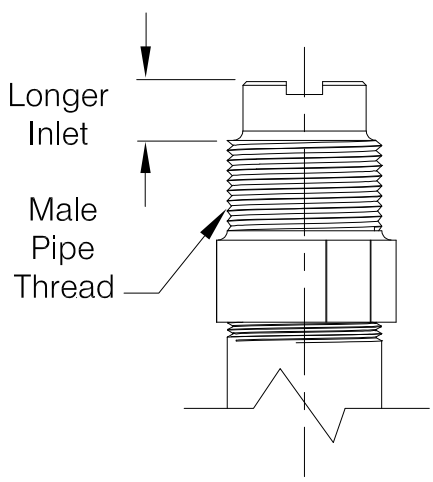

Dry Sprinkler
Standard Inlet

BE SURE TO ORDER THE CORRECT SPRINKLERS FOR YOUR APPLICATION

COMDRYDET2

FIELD SET TFM# 21689-A, 21689-B, 21689-C PROJECT# 2025-11-03-04

THESE PLANS AND SPECIFICATIONS ARE REQUIRED TO BE KEPT ON THE JOB SITE UNTIL A FINAL CERTIFICATE OF OCCUPANCY OR PROJECT COMPLETION FORM IS ISSUED BY THIS OFFICE.
No alterations, deletions, additions or modifications of any kind are allowed to this approved set without written permission of this office.
TENNESSEE STATE FIRE MARSHAL'S OFFICE

Acceptable and Unacceptable Installation Practices for Steel Pipe Fittings

Figure 16

ACCEPTABLE INSTALLATIONS FOR DRY PENDENT SPRINKLERS

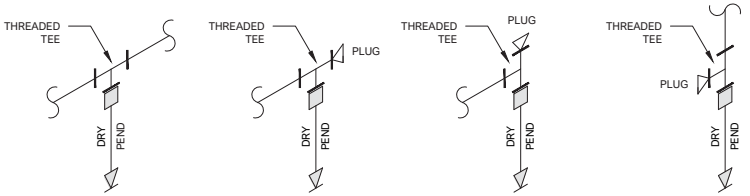

NOTES:
1. EXPOSED LENGTH OF DRY BARREL INSIDE OF CONDITIONED SPACE TO BE IN ACCORDANCE WITH THIS BULLETIN AND NFPA 13.

UNACCEPTABLE INSTALLATIONS FOR DRY PENDENT SPRINKLERS

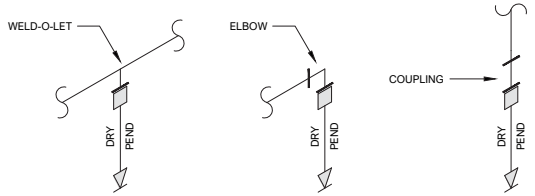

NOTES:
1. IN ADDITION TO THE UNACCEPTABLE INSTALLATIONS ABOVE, DRY PENDENT SPRINKLERS SHALL NOT BE INSTALLED INTO MECHANICAL TEES (SADDLE OR U-BOLT STYLE), OR INTERNALLY GASKETED CPVC FITTINGS.

ACCEPTABLE INSTALLATIONS FOR DRY SIDEWALL SPRINKLERS

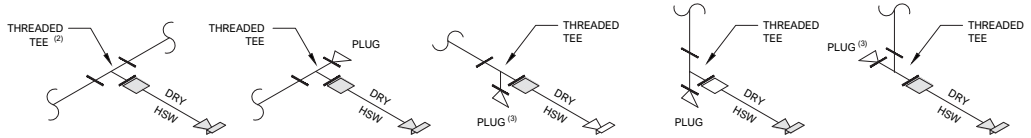

NOTES:
1. EXPOSED LENGTH OF DRY BARREL INSIDE OF CONDITIONED SPACE TO BE IN ACCORDANCE WITH THIS BULLETIN AND NFPA 13.
2. WELD-O-LETS IN COMPLIANCE WITH NFPA 13 REQUIREMENTS ALSO ACCEPTABLE FOR DRY SIDEWALL SPRINKLERS.
3. PREFERRED ORIENTATION OF PLUG IS DOWN.

UNACCEPTABLE INSTALLATIONS FOR DRY SIDEWALL SPRINKLERS

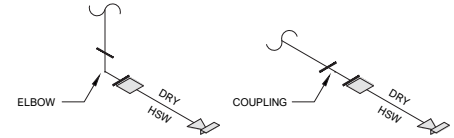

NOTES:
1. IN ADDITION TO THE UNACCEPTABLE INSTALLATIONS ABOVE, DRY SIDEWALL SPRINKLERS SHALL NOT BE INSTALLED INTO MECHANICAL TEES (SADDLE OR U-BOLT STYLE), OR INTERNALLY GASKETED CPVC FITTINGS.

ACCEPTABLE INSTALLATIONS FOR DRY UPRIGHT SPRINKLERS

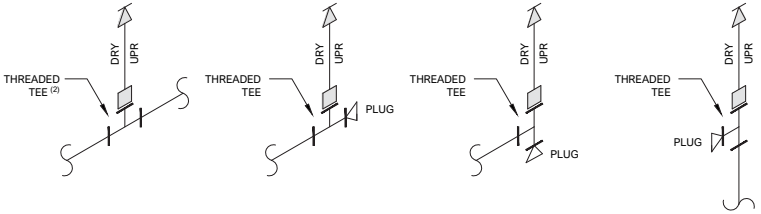

NOTES:
1. EXPOSED LENGTH OF DRY BARREL INSIDE OF CONDITIONED SPACE TO BE IN ACCORDANCE WITH THIS BULLETIN AND NFPA 13.
2. WELD-O-LETS IN COMPLIANCE WITH NFPA 13 REQUIREMENTS ALSO ACCEPTABLE FOR DRY UPRIGHT SPRINKLERS.

UNACCEPTABLE INSTALLATIONS FOR DRY UPRIGHT SPRINKLERS

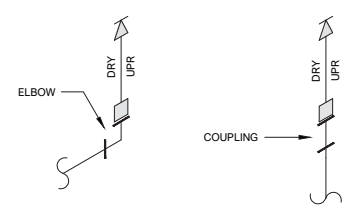

NOTES:
1. IN ADDITION TO THE UNACCEPTABLE INSTALLATIONS ABOVE, DRY UPRIGHT SPRINKLERS SHALL NOT BE INSTALLED INTO MECHANICAL TEES (SADDLE OR U-BOLT STYLE), OR INTERNALLY GASKETED CPVC FITTINGS.

FIELD SET TFM# 21689-A, 21689-B, 21689-C PROJECT# 2025-11-03-04

THESE PLANS AND SPECIFICATIONS ARE REQUIRED TO BE KEPT ON THE JOB SITE UNTIL A FINAL CERTIFICATE OF OCCUPANCY OR PROJECT COMPLETION FORM IS ISSUED BY THIS OFFICE. Revisions, deletions, additions or modifications of any kind are allowed to this approved set without written permission of this office. TENNESSEE STATE FIRE MARSHAL'S OFFICE

Material Specifications

Figure 17

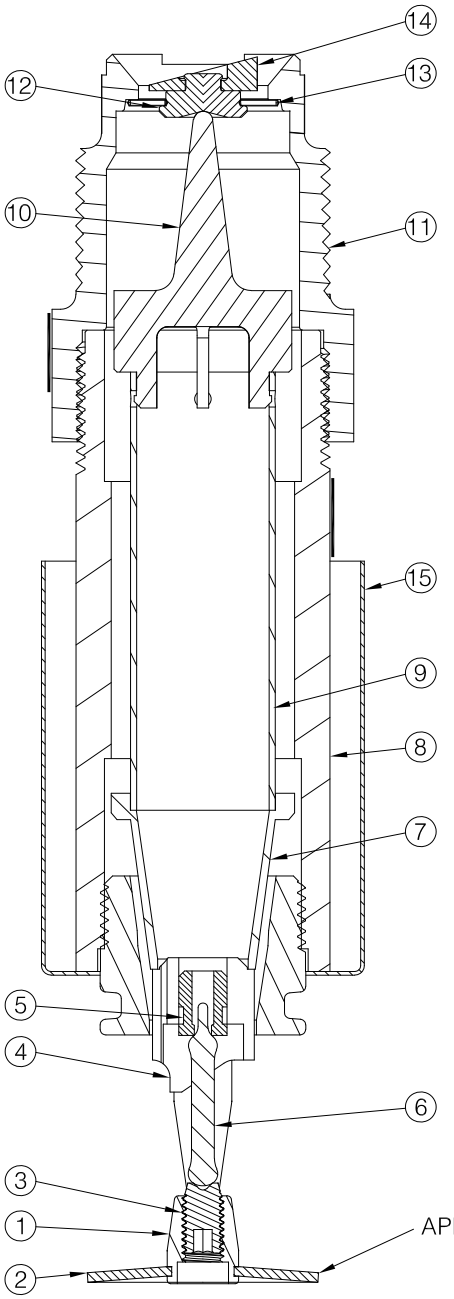

Item	Description	Material
1	Frame	UNS C83600 Brass
2	Deflector	UNS C51000 Bronze
3	Load Screw	UNS C22000 Brass
4	Seat Adapter	UNS C36000 Brass
5	Bulb Insert	UNS C31400 Copper
6	Glass Bulb	Glass/Glycerin Solution
7	Orifice Adapater	UNS C36000 Brass
8	Outer Tube	Galvanized Steel
9	Inner Tube	UNS C23000 Brass
10	Yoke	UNS C38000 Brass
11	Inlet	UNS C35330 Brass
12	Cap	UNS C54400 Brass
13	Spring Washer/Seal	PTFE Coated Beryllium Nickel
14	Flip Disk	UNS C54400 Brass
15	Can/Escutcheon	Varies (Not used on all models)

NOTE: PIPE WRENCH MAY ONLY BE USED ON OUTER STEEL BARREL OF SPRINKLER

COMDRYDET13

APPEARANCE OF DEFLECTOR WILL VARY DEPENDING ON MODEL

FIELD SET TFM# 21689-A, 21689-B, 21689-C PROJECT# 2025-11-03-04

THESE PLANS AND SPECIFICATIONS ARE REQUIRED TO BE KEPT ON THE JOB SITE UNTIL A FINAL CERTIFICATE OF OCCUPANCY OR PROJECT COMPLETION FORM IS ISSUED BY THIS OFFICE.
No reductions, deletions, additions or modifications of any kind are allowed to this approved or without written permission of this office.
TENNESSEE STATE FIRE MARSHAL'S OFFICE

Wrench Options



F3R Wrench
(Standard, HB, and No Escutcheon trims)



XLO2 Wrench
(FP Recessed, F1 Recessed, and CCP trims)

Maintenance

Reliable Model F3QR56 series sprinklers should be inspected and the sprinkler system maintained in accordance with NFPA 25, as well as the requirements of any Authorities Having Jurisdiction. Prior to installation, sprinklers should remain in the original cartons and packaging until used. This will minimize the potential for damage to sprinklers that could cause improper operation or non-operation.

Do not clean sprinklers with soap and water, ammonia liquid or any other cleaning fluids. Remove dust by gentle vacuuming without touching the sprinkler.

Replace any sprinkler which has been painted (other than factory applied). A stock of spare sprinklers should be maintained to allow quick replacement of damaged or operated sprinklers. Failure to properly maintain sprinklers may result in inadvertent operation or non-operation during a fire event.

Guarantee

For the Reliable Automatic Sprinkler Co., Inc. guarantee, terms, and conditions, visit www.reliablesprinkler.com.

Patents

US Patent No. 7,841,418

Ordering Information

Specify:

Model F3QR56 Dry Sprinkler
- Upright
- Pendent
- Horizontal Sidewall

Trim Style
- Standard Escutcheon
- HB Escutcheon
- FP Recessed Escutcheon
- F1 Recessed Escutcheon
- CCP Cover Plate (Pendent only)
- No Escutcheon

Temperature Rating
- See available temperatures (depending on trim style and approvals) on pages 2-13

Finish
- See available finish combinations (depending on trim style and approvals) on pages 2-13

Length
- For dry pendent and sidewall sprinklers with trim, “A” dimension is measured from face of fitting to face of finished ceiling or wall in 1/4” (6mm) increments.
- For dry upright sprinklers and sprinklers with no trim, order dimension is from face of fitting to deflector in 1/4” (6mm) increments.

Notes:
1. Lengths are based upon a normally gauged pipe thread “make-up” of .60 inch (15mm) per ANSI B2.1 (approximately 7-1/2 threads).

Installation Wrench
- Model F3R (Standard, HB, and No Escutcheon trims)
- Model XLO2 (FP Recessed, F1 Recessed & CCP trims)

FIELD SET TFM# 21689-A, 21689-B, 21689-C PROJECT# 2025-11-03-04

THESE PLANS AND SPECIFICATIONS ARE REQUIRED TO BE KEPT ON THE JOB SITE UNTIL A FINAL CERTIFICATE OF OCCUPANCY OR PROJECT COMPLETION FORM IS ISSUED BY THIS OFFICE.
No alterations, deletions, additions or modifications of any kind are allowed to the approved plans without written permission of this office.
TENNESSEE STATE FIRE MARSHAL'S OFFICE

Victaulic® VicFlex™ Series FL-DRY/VS1
Dry, Quick/Standard Response Sprinklers, K5.6 (80)

10.91

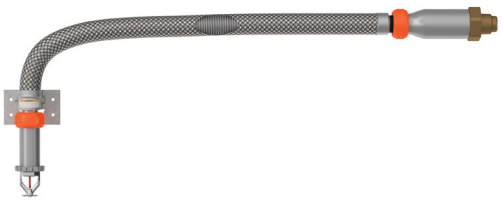

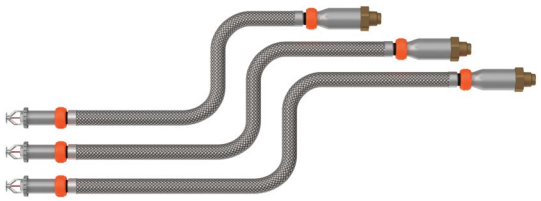

1.0 PRODUCT DESCRIPTION

STANDARD RESPONSE SLEEVE AND SKIRT PENDENT SPRINKLER	
SIN	**V3505**
ORIENTATION	Pendent
NOMINAL K-FACTOR/METRIC K-FACTOR	5.6/80
RESPONSE	Standard
CONNECTION	1" NPT/25mm BSPT
MAX. WORKING PRESSURE	175 psi (1200 kPa)
ESCUTCHEON	Sleeve and Skirt
LENGTHS	38"/965mm, 50"/1270mm and 58"/1473mm

STANDARD RESPONSE RECESSED PENDENT SPRINKLER	
SIN	**V3505**
ORIENTATION	Pendent
NOMINAL K-FACTOR/METRIC K-FACTOR	5.6/80
RESPONSE	Standard
CONNECTION	1" NPT/25mm BSPT
MAX. WORKING PRESSURE	175 psi (1200 kPa)
ESCUTCHEON	Recessed
LENGTHS	38"/965mm, 50"/1270mm and 58"/1473mm

QUICK RESPONSE SLEEVE AND SKIRT PENDENT SPRINKLER	
SIN	**V3506**
ORIENTATION	Pendent
NOMINAL K-FACTOR/METRIC K-FACTOR	5.6/80
RESPONSE	Quick
CONNECTION	1" NPT/25mm BSPT
MAX. WORKING PRESSURE	175 psi (1200 kPa)
ESCUTCHEON	Sleeve and Skirt
LENGTHS	38"/965mm, 50"/1270mm and 58"/1473mm

QUICK RESPONSE RECESSED PENDENT SPRINKLER	
SIN	**V3506**
ORIENTATION	Pendent
NOMINAL K-FACTOR/METRIC K-FACTOR	5.6/80
RESPONSE	Quick
CONNECTION	1" NPT/25mm BSPT
MAX. WORKING PRESSURE	175 psi (1200 kPa)
ESCUTCHEON	Recessed
LENGTHS	38"/965mm, 50"/1270mm and 58"/1473mm

STANDARD RESPONSE SLEEVE AND SKIRT HORIZONTAL SIDEWALL SPRINKLER	
SIN	**V3509**
ORIENTATION	Horizontal Sidewall
NOMINAL K-FACTOR/METRIC K-FACTOR	5.6/80
RESPONSE	Standard
CONNECTION	1" NPT/25mm BSPT
MAX. WORKING PRESSURE	175 psi (1200 kPa)
ESCUTCHEON	Sleeve and Skirt
LENGTHS	38"/965mm, 50"/1270mm and 58"/1473mm

ALWAYS REFER TO ANY NOTIFICATIONS AT THE END OF THIS DOCUMENT REGARDING PRODUCT INSTALLATION, MAINTENANCE OR SUPPORT.

FIELD SET TFM# 21689-A, 21689-B, 21689-C PROJECT# 2025-11-03-04

 © 2025 Victaulic Company. All rights reserved.

PLANS AND SPECIFICATIONS JOB SITE REQUIRED TO BE KEPT ON CERTIFICATE OF OCCUPANCY OR PROJECT COMPLETION FORM IS ISSUED BY OFFICE.
No alterations, additions or modifications of plans are allowed to this approved set without written permission of this office.
TENNESSEE STATE FIRE MARSHAL'S OFFICE

1.0 PRODUCT DESCRIPTION (CONTINUED)

STANDARD RESPONSE RECESSED HORIZONTAL SIDEWALL SPRINKLER	
SIN	**V3509**
ORIENTATION	Horizontal Sidewall
NOMINAL K-FACTOR/METRIC K-FACTOR	5.6/80
RESPONSE	Standard
CONNECTION	1" NPT/25mm BSPT
MAX. WORKING PRESSURE	175 psi (1200 kPa)
ESCUTCHEON	Recessed
LENGTHS	38"/965mm, 50"/1270mm and 58"/1473mm

QUICK RESPONSE SLEEVE AND SKIRT HORIZONTAL SIDEWALL SPRINKLER	
SIN	**V3510**
ORIENTATION	Horizontal Sidewall
NOMINAL K-FACTOR/METRIC K-FACTOR	5.6/80
RESPONSE	Quick
CONNECTION	1" NPT/25mm BSPT
MAX. WORKING PRESSURE	175 psi (1200 kPa)
ESCUTCHEON	Sleeve and Skirt
LENGTHS	38"/965mm, 50"/1270mm and 58"/1473mm

QUICK RESPONSE RECESSED HORIZONTAL SIDEWALL SPRINKLER	
SIN	**V3510**
ORIENTATION	Horizontal Sidewall
NOMINAL K-FACTOR/METRIC K-FACTOR	5.6/80
RESPONSE	Quick
CONNECTION	1" NPT/25mm BSPT
MAX. WORKING PRESSURE	175 psi (1200 kPa)
ESCUTCHEON	Recessed
LENGTHS	38"/965mm, 50"/1270mm and 58"/1473mm

STANDARD RESPONSE CONCEALED PENDENT SPRINKLER	
SIN	**V3517**
ORIENTATION	Concealed Pendent
NOMINAL K-FACTOR/METRIC K-FACTOR	5.6/80
RESPONSE	Standard
CONNECTION	1" NPT/25mm BSPT
MAX. WORKING PRESSURE	175 psi (1200 kPa)
ESCUTCHEON	Concealed
LENGTHS	38"/965mm, 50"/1270mm and 58"/1473mm

QUICK RESPONSE CONCEALED PENDENT SPRINKLER	
SIN	**V3518**
ORIENTATION	Concealed Pendent
NOMINAL K-FACTOR/METRIC K-FACTOR	5.6/80
RESPONSE	Quick
CONNECTION	1" NPT/25mm BSPT
MAX. WORKING PRESSURE	175 psi (1200 kPa)
ESCUTCHEON	Concealed
LENGTHS	38"/965mm, 50"/1270mm and 58"/1473mm

AVAILABLE GUARDS	
SPRINKLER	**V34**
PENDENT	■
SIDEWALL	■

Factory Hydrostatic Test: 100% @ 500 psi/3447 kPa/34 bar

Min. Operating Pressure: Pendent: 7 psi/48 kPa/.5 bar

Temperature Rating: See tables in section 2.0

FIELD SET TFM# 21689-A, 21689-B, 21689-C PROJECT# 2025-11-03-04

 © 2025 Victaulic Company. All rights reserved.

PLANS AND SPECIFICATIONS ARE REQUIRED TO BE KEPT ON THE JOB SITE UNTIL A FINAL CERTIFICATE OF OCCUPANCY OR PROJECT COMPLETION FORM IS ISSUED BY THE OFFICE.
No alterations, additions or modifications of these plans are allowed to this approved set without written permission of this office.
TENNESSEE STATE FIRE MARSHAL'S OFFICE

2.0 CERTIFICATION/LISTINGS

APPROVALS/LISTINGS					
SIN	**V3505**	**V3505**	**V3506**	**V3506**	**V3509**
Nominal K Factor (gpm/(psi)^1/2)	5.6	5.6	5.6	5.6	5.6
Metric K-Factor (lpm/(bar)^1/2)	80	80	80	80	80
Response	Standard	Standard	Quick	Quick	Standard
Deflector Type	Sleeve and Skirt	Recessed	Sleeve and Skirt	Recessed	Sleeve and Skirt SW
	Approved Temperature Ratings F°/C°				
FM	135°F/57°C 155°F/68°C 175°F/79°C 200°F/93°C 286°F/141°C	135°F/57°C 155°F/68°C 175°F/79°C 200°F/93°C	135°F/57°C 155°F/68°C 175°F/79°C 200°F/93°C	135°F/57°C 155°F/68°C 175°F/79°C 200°F/93°C	135°F/57°C 155°F/68°C 175°F/79°C 200°F/93°C 286°F/141°C
cULus	135°F/57°C 155°F/68°C 175°F/79°C 200°F/93°C 286°F/141°C	135°F/57°C 155°F/68°C 175°F/79°C 200°F/93°C 286°F/141°C	135°F/57°C 155°F/68°C 175°F/79°C 200°F/93°C 286°F/141°C	135°F/57°C 155°F/68°C 175°F/79°C 200°F/93°C 286°F/141°C	135°F/57°C 155°F/68°C 175°F/79°C 200°F/93°C 286°F/141°C

APPROVALS/LISTINGS					
SIN	**V3509**	**V3510**	**V3510**	**V3517[3]**	**V3518[3]**
Nominal K Factor (gpm/(psi)^1/2)	5.6	5.6	5.6	5.6	5.6
Metric K-Factor (lpm/(bar)^1/2)	80	80	80	80	80
Response	Standard	Quick	Quick	Standard	Quick[1]
Deflector Type	Recessed SW	Sleeve and Skirt SW	Recessed SW	Concealed	Concealed[2]
	Approved Temperature Ratings F°/C°				
FM	135°F/57°C 155°F/68°C 175°F/79°C 200°F/93°C	135°F/57°C 155°F/68°C 175°F/79°C 200°F/93°C	135°F/57°C 155°F/68°C 175°F/79°C 200°F/93°C	–	135°F/57°C 155°F/68°C 175°F/79°C 200°F/93°C
cULus	135°F/57°C 155°F/68°C 175°F/79°C 200°F/93°C 286°F/141°C	135°F/57°C 155°F/68°C 175°F/79°C 200°F/93°C 286°F/141°C	135°F/57°C 155°F/68°C 175°F/79°C 200°F/93°C 286°F/141°C	135°F/57°C 155°F/68°C 175°F/79°C 200°F/93°C	135°F/57°C 155°F/68°C 175°F/79°C 200°F/93°C

1 Model V3518 is a Standard Response FM sprinkler.

2 Model V3518 is listed as a standard response UL sprinkler when installed in a clean room using a gasketed cover plate. Clean room gaskets are optional and ordered separately.

3 These sprinklers are required to be vented. Installations with a pressurized air plenum above the housing is not permitted.

NOTES

- The VicFlex Series VS1/Style V35 has been tested and evaluated by Spears® for acceptable use with Spears® CPVC products and therefore is covered under the Spears® FlameGuard® Installer Protection Plan.
- For system design purposes, no equivalent length calculations are required.

MAXIMUM ALLOWABLE NUMBER OF BENDS		
Nominal Sprinkler Length inches mm	**Maximum Allowable Number of 90˚ Bends at 2"/51mm Bend Radius for UL Listing**	**Maximum Allowable Number of 90˚ Bends at 7"/178mm Bend Radius for FM Approval**
38.0 965	4	2
50.0 1270	4	3
58.0 1473	4	4

Agency	Approved/Listed Bracket Styles	Approved/Listed Guards
UL	VB1, VB2, VB3, VB4	
FM	VB1, VB2, VB3, VB4. VB5, VBBA	V34

FIELD SET TFM# 21689-A, 21689-B, 21689-C PROJECT# 2025-11-03-04

 © 2025 Victaulic Company. All rights reserved.

PLANS AND SPECIFICATIONS ARE REQUIRED TO BE KEPT ON THE JOB SITE UNTIL A FINAL CERTIFICATE OF OCCUPANCY OR PROJECT COMPLETION FORM IS ISSUED BY THIS OFFICE.
No alterations, additions or modifications of these plans and specifications are allowed to this approved set without written permission of this office.
TENNESSEE STATE FIRE MARSHAL'S OFFICE

3.0 MATERIAL SPECIFICATIONS

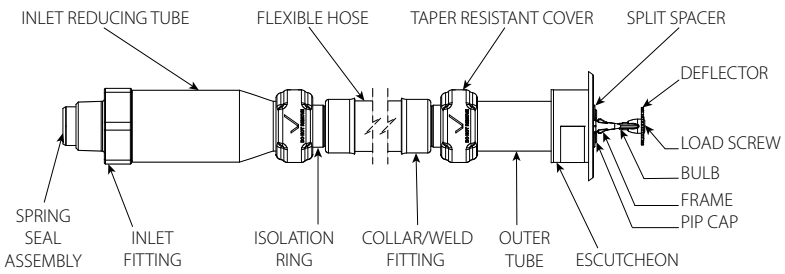

Deflector: Brass
Bulb Nominal Diameter:
Quick Response: 3.0mm
Standard Response: 5.0mm
Split Spacer: Stainless Steel
Load Screw: Brass
Pip Cap: Stainless Steel
Spring Seal Assembly: PTFE coated Beryllium nickel alloy and stainless steel
Frame: Brass
Guard (Optional): Carbon steel, zinc-plated
Flexible Hose: Stainless Steel
Collar/Weld Fitting: Stainless Steel
Gasket Seal: Victaulic EPDM
Isolation Ring: Nylon
Hose Fittings: Carbon steel, zinc-plated
Inlet Fitting: Brass
Outer Tube: Stainless Steel
Concealed Cup: Carbon steel, zinc-plated
Concealed Cover Plate Gasket: White nitrile (Clean room use only)
Brackets: Carbon steel, zinc-plated
Escutcheon: Stainless Steel
Inlet Reducer Fitting: Carbon steel, zinc-plated
Tamper Resistant Cover: Polypropylene

3.1 ACCESSORIES SPECIFICATIONS

Sprinkler Finishes:

☐ **Standard:** VC-250
☐ White painted RAL 9010
☐ Black

FIELD SET TFM# 21689-A, 21689-B, 21689-C PROJECT# 2025-11-03-04

PLANS AND SPECIFICATIONS JOB SITE REQUIRED TO BE KEPT ON THE CERTIFICATE OF OCCUPANCY OR PROJECT COMPLETION FORM IS ISSUED BY OFFICE.
No alterations, additions or modifications of approved set are allowed to this set without written permission of this office.
TENNESSEE STATE FIRE MARSHAL'S OFFICE

 © 2025 Victaulic Company. All rights reserved.

4.0 DIMENSIONS

Product Details and Optional Components

Series VS1 Dry Sprinkler

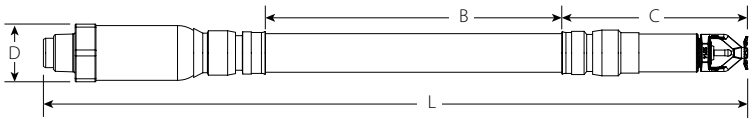

Sprinkler Length inches mm	Overall Length (pendent) L inches mm	Live Length B inches mm	Outlet End Length C inches mm	Maximum OD D inches mm
38 965	39.2 995	25.1 638	6.5 165	2.2 56
50 1270	51.2 1300	37.1 943	6.5 165	2.2 56
58 1475	59.2 1505	45.1 1145	6.5 165	2.2 56

NOTE

- Add ½" to Overall Length and Outlet End Length for increased length of sidewall deflector

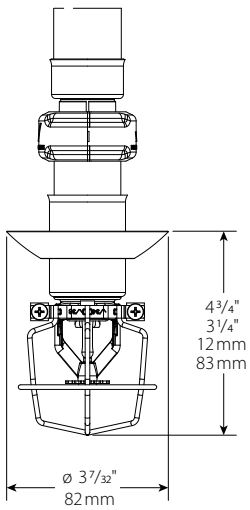

Style VB1 Bracket

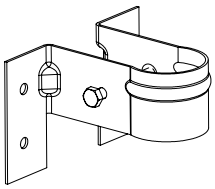

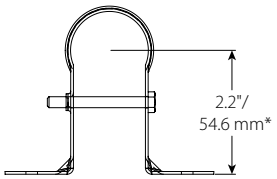

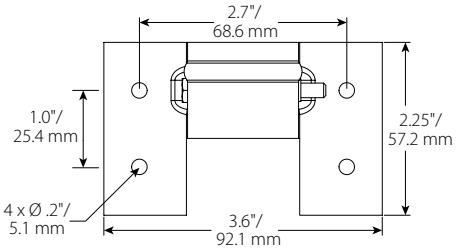

*Note: Theoretical center point of sprinkler in bracket.

FIELD SET TFM# 21689-A, 21689-B, 21689-C PROJECT# 2025-11-03-04

PLANS AND SPECIFICATIONS JOB SITE REQUIRED TO BE KEPT ON THE JOB SITE UNTIL A FINAL CERTIFICATE OF OCCUPANCY OR PROJECT COMPLETION FORM IS ISSUED BY THIS OFFICE.
No alterations, additions or modifications of this plan are allowed to this approved set without written permission of this office.
TENNESSEE STATE FIRE MARSHAL'S OFFICE

 © 2025 Victaulic Company. All rights reserved.

4.0 DIMENSIONS (CONTINUED)

Style VB2 Bracket
Recessed Pendent, Suspended Ceilings

Item	Description
1	24"/610 mm or 48"/1220 mm Square Bar
2	Patented 1-Bee Center Bracket
3	End Bracket

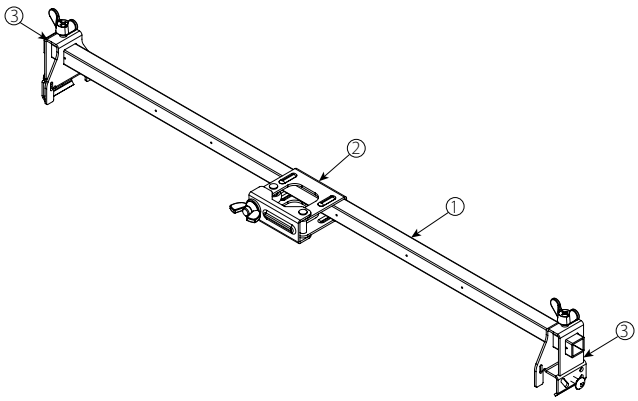

Style VB3 Bracket
Concealed Pendent, Suspended Ceilings

Item	Description
1	24"/610 mm or 48"/1220 mm Square Bar
2	Patented 1-Bee Center Bracket
3	End Bracket

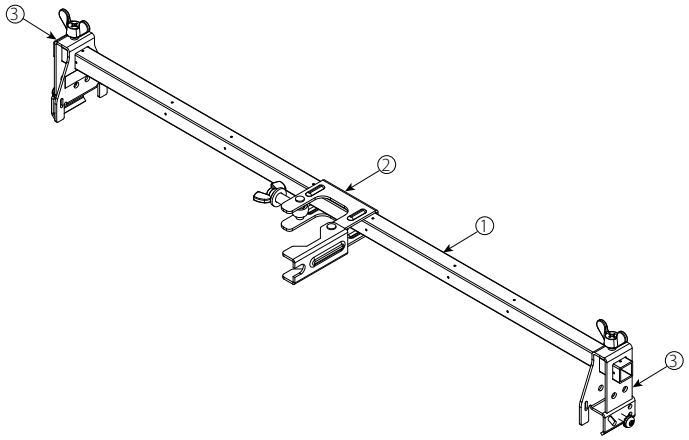

Style VB4 Bracket
Sleeve and Skirt Pendent, Suspended Ceilings

Item	Description
1	24"/610 mm or 48"/1220 mm Square Bar
2	Center Bracket
3	End Bracket

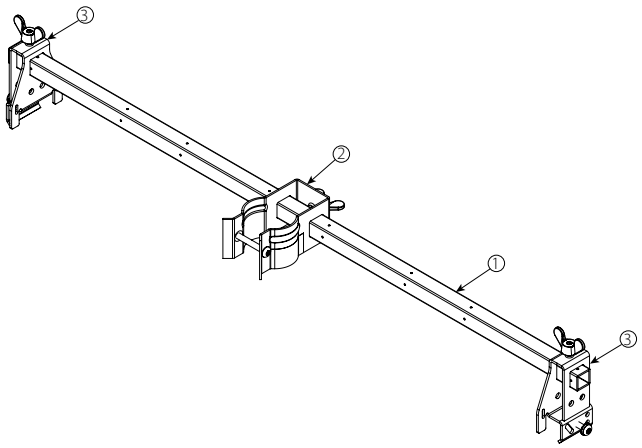

Style VB5 Bracket
Data Center Grid, Wood/Metal Joist

Item	Description
1	24"/610 mm or 48"/1220 mm Square Bar
2	Center Bracket
3	End Bracket

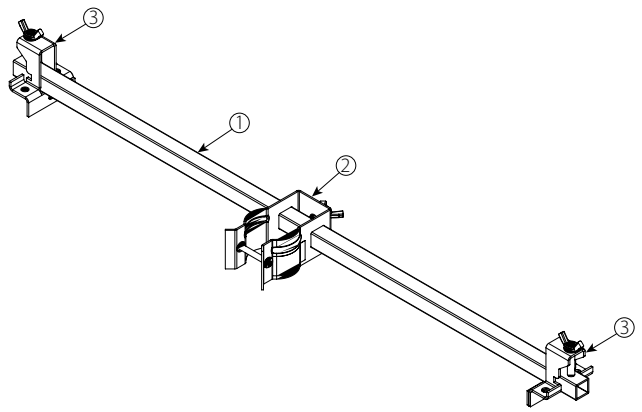

FIELD SET TFM# 21689-A, 21689-B, 21689-C PROJECT# 2025-11-03-04

PLANS AND SPECIFICATIONS ARE REQUIRED TO BE KEPT ON THE JOB SITE UNTIL A FINAL CERTIFICATE OF OCCUPANCY OR PROJECT COMPLETION FORM IS ISSUED BY THIS OFFICE.
No alterations, additions or modifications of these plans are allowed to this approved set without written permission of this office.
TENNESSEE STATE FIRE MARSHAL'S OFFICE

 © 2025 Victaulic Company. All rights reserved.

4.0 DIMENSIONS (CONTINUED)

Style VBBA Bracket

Floor above mount, cantilever mount, temporary mount

Item	Description
1	Mounting Plate
2	Square Bar
3	Cap Screw
4	Bracket Body

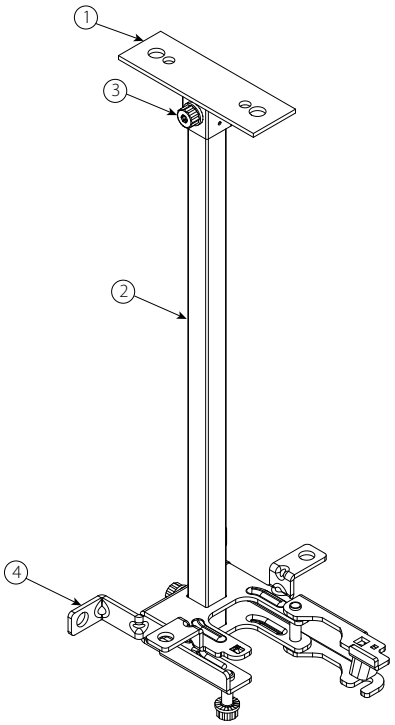

FIELD SET TFM# 21689-A, 21689-B, 21689-C PROJECT# 2025-11-03-04

THIS PLANS AND SPECIFICATIONS ARE REQUIRED TO BE KEPT ON THE JOB SITE UNTIL A FINAL CERTIFICATE OF OCCUPANCY OR PROJECT COMPLETION FORM IS ISSUED BY THE FIRE OFFICE.
No alterations, deletions, additions or modifications of this plan are allowed to this approved set without written permission of this office.
TENNNESSEE STATE FIRE MARSHAL'S OFFICE

 © 2025 Victaulic Company. All rights reserved.

4.1 DIMENSIONS

Sprinkler Finishes: Dimensions and Mounting Conditions

NOTE

- Drawings are shown with ⅝" finished ceiling thickness. Adjustments to "B" and "C" dimensions will be required if finished ceiling thickness deviate from drawing.

Recessed Pendent:

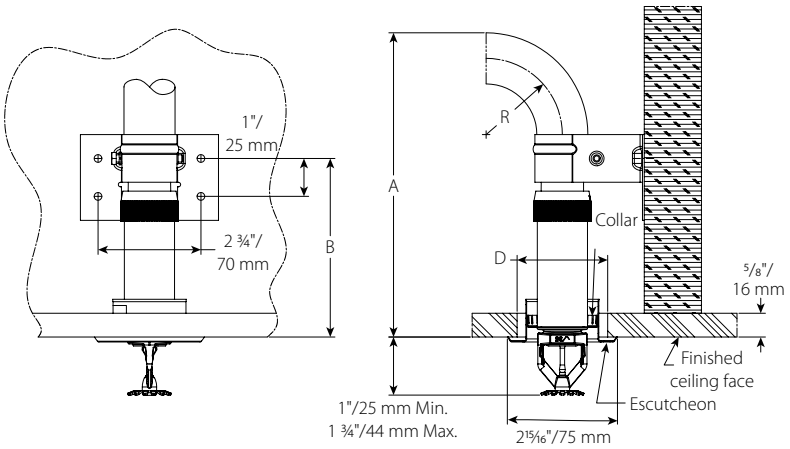

Clearance Chart		
Dimension	inches mm	
"R" Minimum Bend Radius	2 50	7 175
"A" Minimum Required Installation Space	7 ⅝ 193	12 ⅝ 320
"B" Mounting Screw Hole Location	4 ¾ 119	
Ceiling Hole Diameter "D"	2 – 2 ⅜ 50 – 60	

NOTE

- Dimensions are shown with ¾" escutcheon at middle of height adjustment range.

FIELD SET TFM# 21689-A, 21689-B, 21689-C PROJECT# 2025-11-03-04

PLANS AND SPECIFICATIONS JOB SITE REQUIRED TO BE KEPT ON THE JOB SITE UNTIL A FINAL CERTIFICATE OF OCCUPANCY OR PROJECT COMPLETION FORM IS ISSUED BY THIS OFFICE.
No alterations, additions or modifications of these plans are allowed to this approved set without written permission of this office.
TENNESSEE STATE FIRE MARSHAL'S OFFICE

 © 2025 Victaulic Company. All rights reserved.

4.2 DIMENSIONS

Recessed Pendent Alternative Bracket Location

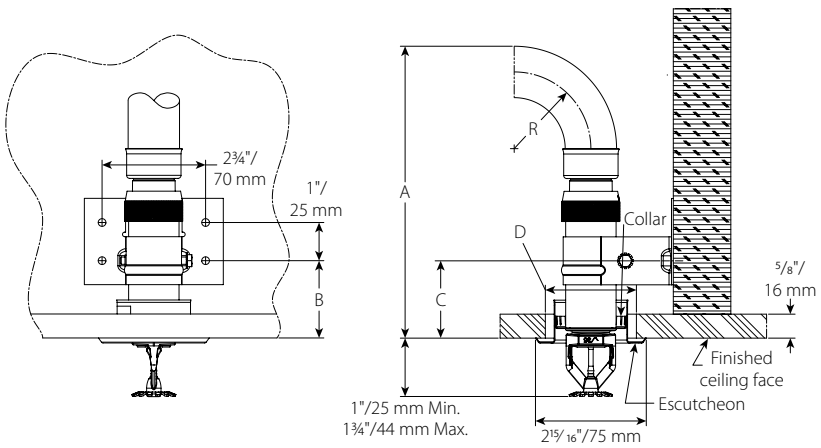

Clearance Chart		
Dimension	inches mm	
"R" Minimum Bend Radius	2 50	7 175
"A" Minimum Required Installation Space	7 5/8 193	12 5/8 320
"B" Mounting Screw Hole Location	2 50	
Ceiling Hole Diameter "D"	2 – 2 3/8 50 – 60	

NOTE

- Dimensions are shown with ¾" escutcheon at middle of height adjustment range.

FIELD SET TFM# 21689-A, 21689-B, 21689-C PROJECT# 2025-11-03-04

 © 2025 Victaulic Company. All rights reserved.

PLANS AND SPECIFICATIONS ARE REQUIRED TO BE KEPT ON THE JOB SITE UNTIL A FINAL CERTIFICATE OF OCCUPANCY OR PROJECT COMPLETION FORM IS ISSUED BY THIS OFFICE.
No alterations, additions or modifications of this project are allowed to this approved set without written permission of this office.
TENNESSEE STATE FIRE MARSHAL'S OFFICE

4.3 DIMENSIONS

Sleeve and Skirt Pendent

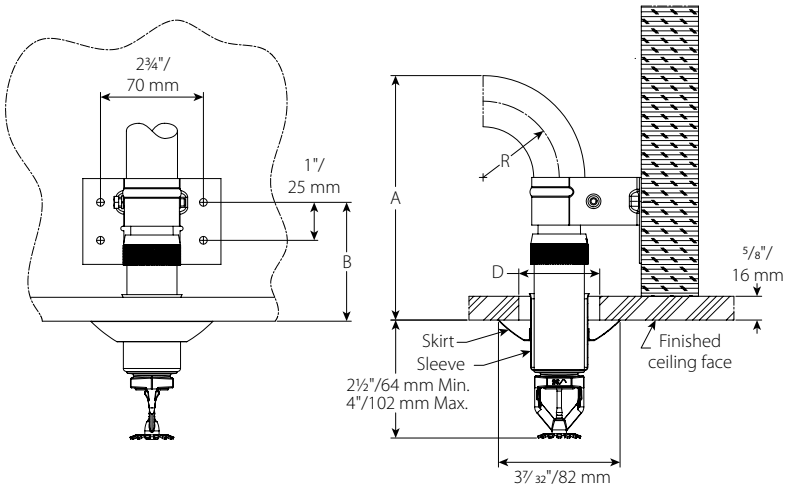

Clearance Chart		
Dimension	inches mm	
"R" Minimum Bend Radius	2 50	7 175
"A" Minimum Required Installation Space	6½ 163	11½ 290
"B" Mounting Screw Hole Location	3⅛ 79	
Ceiling Hole Diameter "D"	1¾ – 2⅛ 44 – 54	

4.4 DIMENSIONS

Concealed Pendent

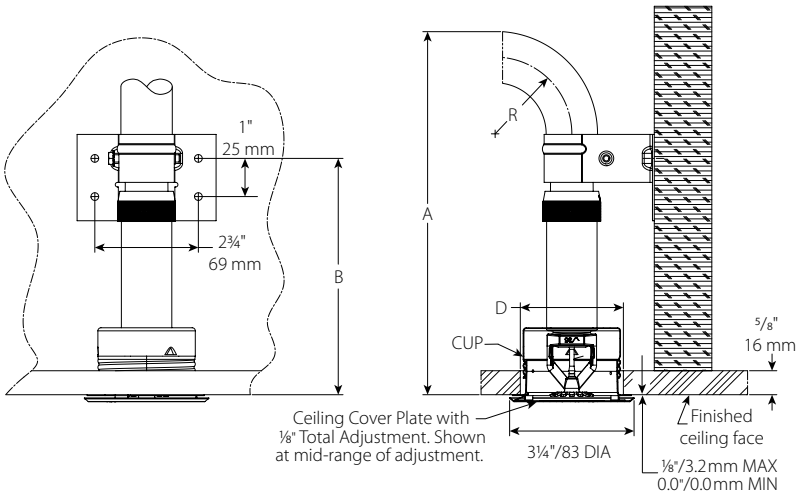

Clearance Chart		
Dimension	inches mm	
"R" Minimum Bend Radius	2 50	7 175
"A" Minimum Required Installation Space	9½ 241	14½ 369
"B" Mounting Screw Hole Location	6¼ 157	
Ceiling Hole Diameter "D"	2⅝ – 2¾ 67 – 70	

 © 2025 Victaulic Company. All rights reserved.

FIELD SET TFM# 21689-A, 21689-B, 21689-C PROJECT# 2025-11-03-04

PLANS AND SPECIFICATIONS JOB SITE REQUIRED TO BE KEPT ON THE UNTIL A FINAL CERTIFICATE OF OCCUPANCY OR PROJECT COMPLETION FORM IS ISSUED BY OFFICE.
No alterations, additions or modifications of approved set are allowed to this without written permission of this office.
TENNESSEE STATE FIRE MARSHAL'S OFFICE

4.5 DIMENSIONS

Concealed Pendent Alternative Bracket Location

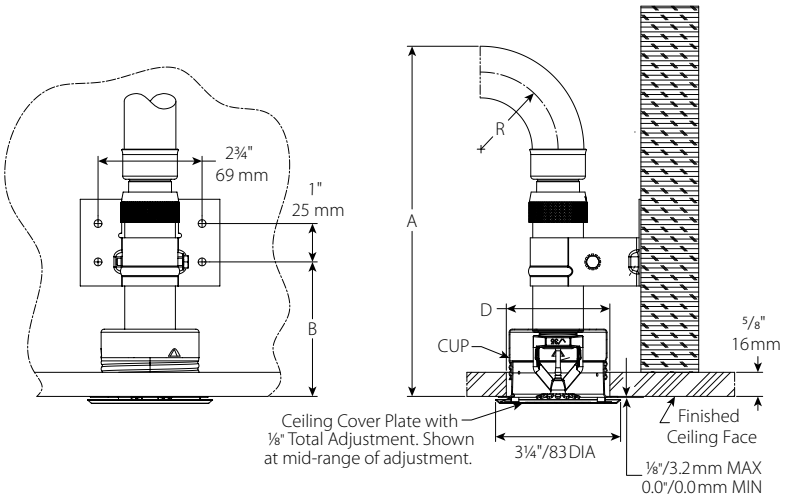

Clearance Chart		
Dimension	inches mm	
"R" Minimum Bend Radius	2 50	7 175
"A" Minimum Required Installation Space	9⅛ 231	14⅛ 358
"B" Mounting Screw Hole Location	3½ 89	
Ceiling Hole Diameter "D"	2⅝ – 2¾ 67 – 70	

4.6 DIMENSIONS

Sleeve and Skirt Sidewall

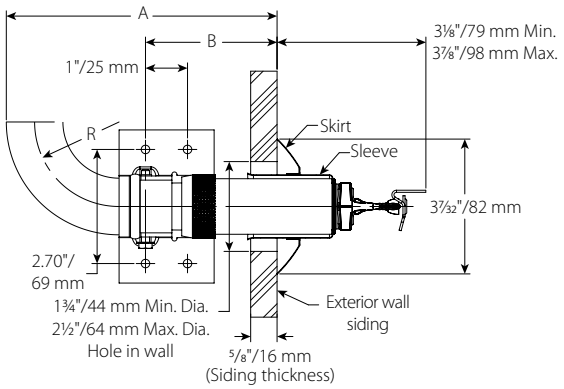

Clearance Chart		
Dimension	inches mm	
"R" Minimum Bend Radius	2 50	7 175
"A" Minimum Required Installation Space	6½ 163	11½ 290
"B" Mounting Screw Hole Location	3⅛ 79	
Ceiling Hole Diameter "D"	1¾ – 2⅛ 44 – 54	

FIELD SET TFM# 21689-A, 21689-B, 21689-C PROJECT# 2025-11-03-04

 © 2025 Victaulic Company. All rights reserved.

THESE PLANS AND SPECIFICATIONS ARE REQUIRED TO BE KEPT ON THE JOB SITE UNTIL A FINAL CERTIFICATE OF OCCUPANCY OR PROJECT COMPLETION FORM IS ISSUED BY THE OFFICE.
No alterations, additions or modifications of this plan are allowed to this approved set without written permission of this office.
TENNNESSEE STATE FIRE MARSHAL'S OFFICE

4.7 DIMENSIONS

Recessed Sidewall

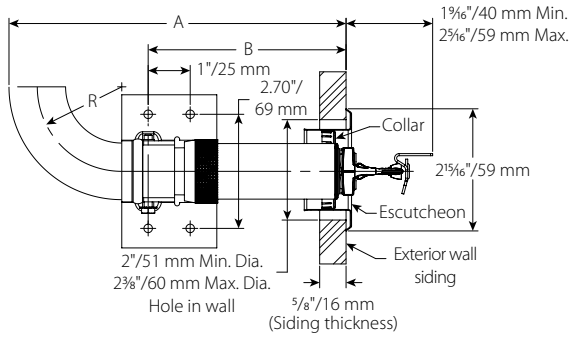

Clearance Chart		
Dimension	inches mm	
"R" Minimum Bend Radius	2 50	7 175
"A" Minimum Required Installation Space	8 203	13 330
"B" Mounting Screw Hole Location	4 ¾ 119	
Ceiling Hole Diameter "D"	2 – 2⅜ 51 – 60	

4.8 DIMENSIONS

Recessed Sidewall Alternative Bracket Location

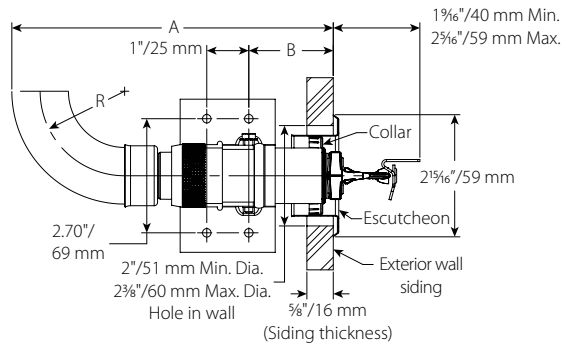

Clearance Chart		
Dimension	inches mm	
"R" Minimum Bend Radius	2 50	7 175
"A" Minimum Required Installation Space	8 203	13 330
"B" Mounting Screw Hole Location	2 51	
Ceiling Hole Diameter "D"	2 – 2⅜ 51 – 60	

FIELD SET TFM# 21689-A, 21689-B, 21689-C PROJECT# 2025-11-03-04

THESE PLANS AND SPECIFICATIONS ARE REQUIRED TO BE KEPT ON THE JOB SITE UNTIL A FINAL CERTIFICATE OF OCCUPANCY OR PROJECT COMPLETION FORM IS ISSUED BY THE OFFICE.
No alterations, additions, or modifications of this plan are allowed to this approved set without written permission of this office.
TENNNESSEE STATE FIRE MARSHAL'S OFFICE

 © 2025 Victaulic Company. All rights reserved.

4.9 DIMENSIONS

VB2 Recessed Pendent

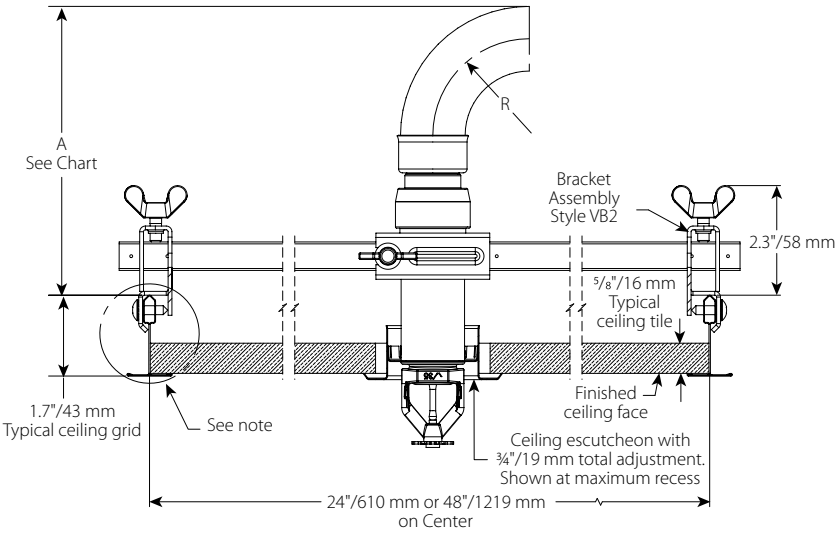

Recessed Pendent

Clearance Chart		
Dimension	inches mm	
"R" Minimum Bend Radius	2 50	7 175
"A" Minimum Required Installation Space	6½ 163	11½ 290

NOTE

- Variations of ceiling grids, brackets, and sprinkler assemblies are permitted but may result in clearance differences from the figures above.

FIELD SET TFM# 21689-A, 21689-B, 21689-C PROJECT# 2025-11-03-04

 © 2025 Victaulic Company. All rights reserved.

PLANS AND SPECIFICATIONS JOB SITE REQUIRED TO BE KEPT ON THE CONSTRUCTION OR PROJECT UNTIL A FINAL CERTIFICATE OF OCCUPANCY OR FINAL CONSTRUCTION FORM IS ISSUED BY THE OFFICE.
No alterations, additions or modifications of any kind are allowed to this approved set without written permission of this office.
TENNESSEE STATE FIRE MARSHAL'S OFFICE

4.10 DIMENSIONS

VB3 Concealed Pendent

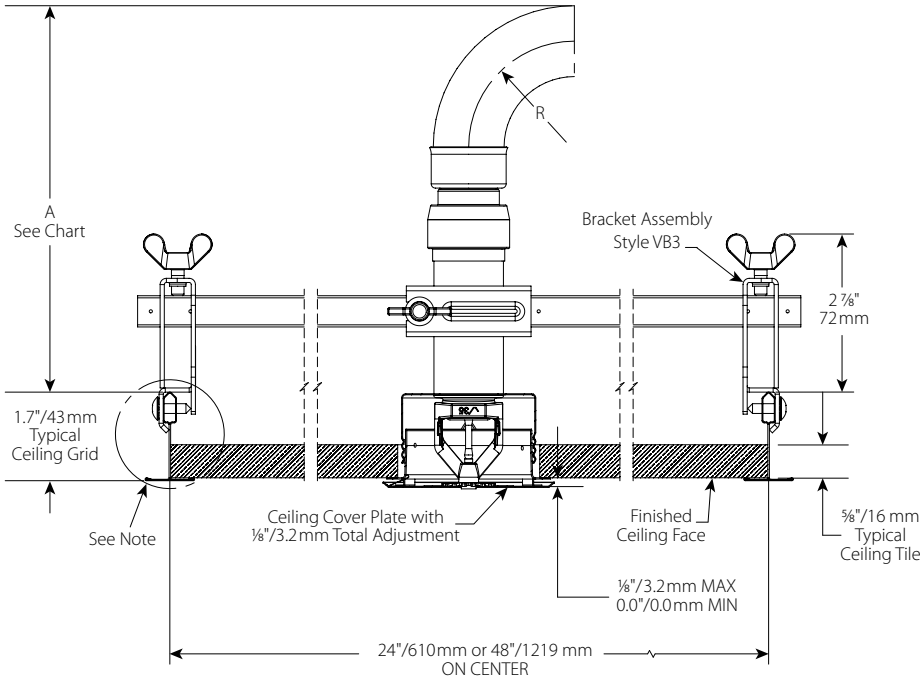

Clearance Chart		
Dimension	inches mm	
"R" Minimum Bend Radius	2 50	7 175
"A" Minimum Required Installation Space	7⅝ 193	12⅝ 320

NOTE

- Variations of ceiling grids, brackets, and sprinkler assemblies are permitted but may result in clearance differences from the figures above.

FIELD SET TFM# 21689-A, 21689-B, 21689-C PROJECT# 2025-11-03-04

THESE PLANS AND SPECIFICATIONS ARE REQUIRED TO BE KEPT ON THE JOB SITE UNTIL A FINAL CERTIFICATE OF OCCUPANCY OR PROJECT COMPLETION FORM IS ISSUED BY THE OFFICE.
No alterations, deletions, additions or modifications of the plans are allowed to this approved set without written permission of this office.
TENNNESSEE STATE FIRE MARSHAL'S OFFICE

 © 2025 Victaulic Company. All rights reserved.

4.11 DIMENSIONS

VB4 Sleeve and Skirt Pendent

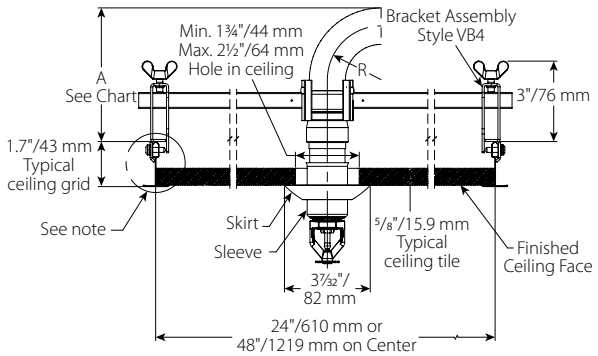

Sleeve and Skirt Pendent

Clearance Chart		
Bend Radius		
	inches mm	inches mm
"R" Minimum Bend Radius	2 51	7 178
"A" Minimum Required Installation Space	5 127	10 254

NOTE

- Variations of ceiling grids, brackets, and sprinkler assemblies are permitted but may result in clearance differences from the figures above.

FIELD SET TFM# 21689-A, 21689-B, 21689-C PROJECT# 2025-11-03-04

PLANS AND SPECIFICATIONS JOB SITE REQUIRED TO BE KEPT ON THE CERTIFICATE OF OCCUPANCY OR PROJECT COMPLETION FORM IS ISSUED BY OFFICE.
No alterations, additions or modifications of this approved set without written permission of this office.
TENNESSEE STATE FIRE MARSHAL'S OFFICE

 © 2025 Victaulic Company. All rights reserved.

4.12 DIMENSIONS

VB5 Data Center Grid Bracket

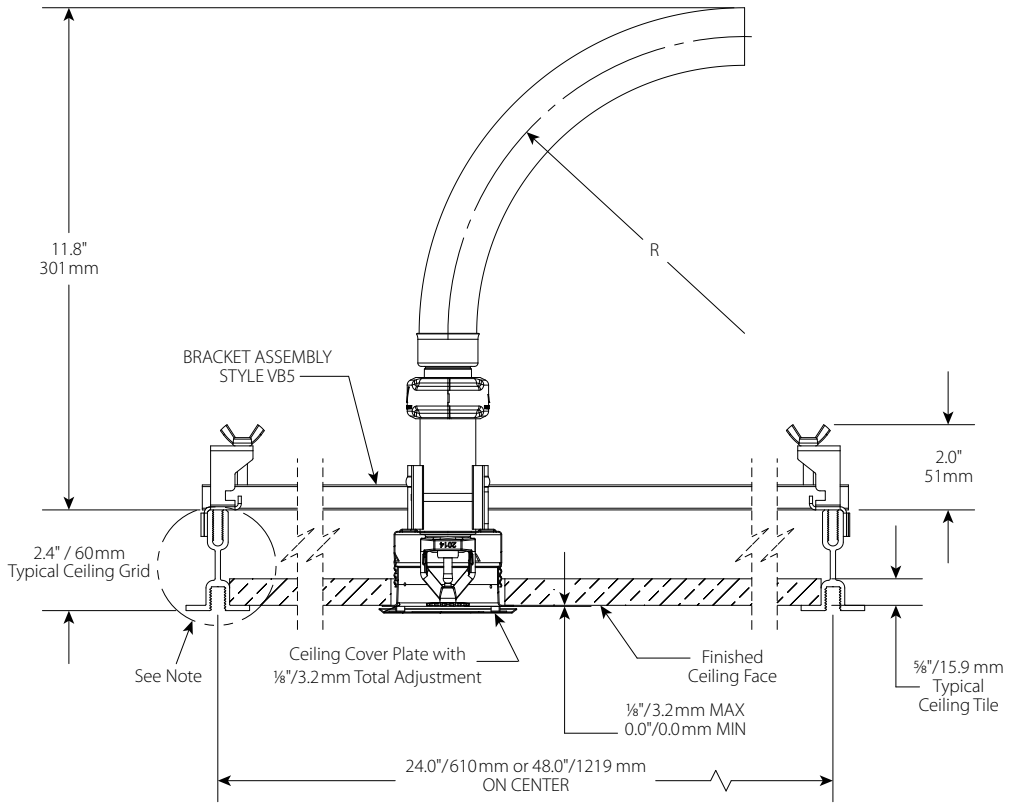

Clearance Chart	
Bend Radius	
	inches mm
"R" Minimum Bend Radius	7 178
"A" Minimum Required Installation Space	11.8 300

NOTE

- Variations of ceiling grids, brackets, and sprinkler assemblies are permitted but may result in clearance differences from the figures above.

FIELD SET TFM# 21689-A, 21689-B, 21689-C PROJECT# 2025-11-03-04

 © 2025 Victaulic Company. All rights reserved.

PLANS AND SPECIFICATIONS JOB SITE REQUIRED TO BE KEPT ON THE JOB SITE UNTIL A FINAL CERTIFICATE OF OCCUPANCY OR PROJECT COMPLETION FORM IS ISSUED BY THE OFFICE.
No alterations, additions or modifications of these plans are allowed to this approved set without written permission of this office.
TENNESSEE STATE FIRE MARSHAL'S OFFICE

4.13 DIMENSIONS

Style VBBA Bracket

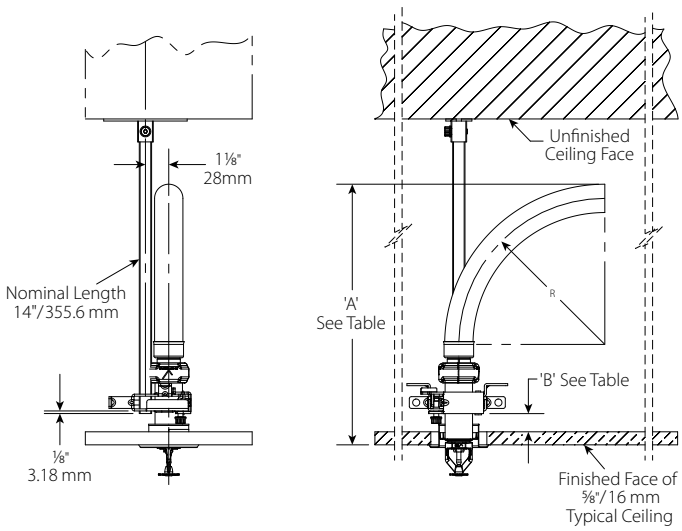

Clearance Chart		
Bend Radius		
	recessed inches mm	**concealed** inches mm
"R" Minimum Bend Radius	7 178	
"A" Minimum Required Installation Space	12.5 317	14.0 354
"B" Distance from Top of Typical Ceiling Tile to Bottom of Gate	0.9 22.8	2.4 61.0

FIELD SET TFM# 21689-A, 21689-B, 21689-C PROJECT# 2025-11-03-04

 © 2025 Victaulic Company. All rights reserved.

PLANS AND SPECIFICATIONS ARE REQUIRED TO BE KEPT ON THE JOB SITE UNTIL A FINAL CERTIFICATE OF OCCUPANCY OR PROJECT COMPLETION FORM IS ISSUED BY THIS OFFICE.
No alterations, additions or modifications of these plans are allowed to this approved set without written permission of this office.
TENNESSEE STATE FIRE MARSHAL'S OFFICE

4.13 DIMENSIONS (CONTINUED)

Style VBBA Bracket

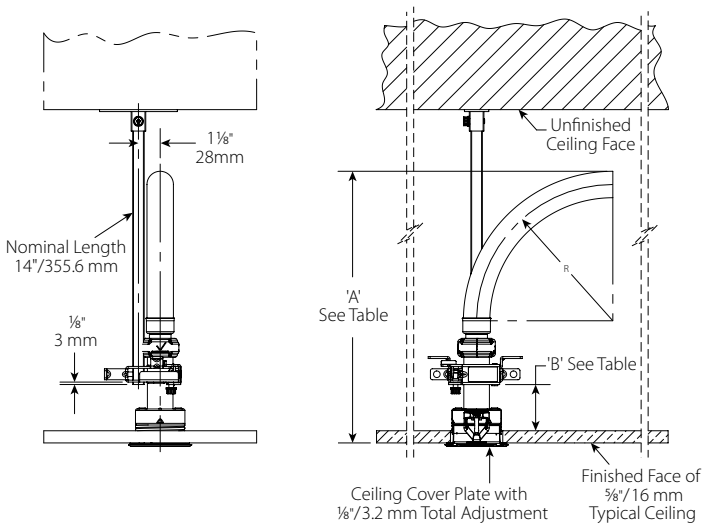

Clearance Chart		
Bend Radius		
	recessed inches mm	**concealed** inches mm
"R" Minimum Bend Radius	7 178	
"A" Minimum Required Installation Space	12.5 317	14.0 354
"B" Distance from Top of Typical Ceiling Tile to Bottom of Gate	0.9 22.8	2.4 61.0

FIELD SET TFM# 21689-A, 21689-B, 21689-C PROJECT# 2025-11-03-04

 © 2025 Victaulic Company. All rights reserved.

4.14 DIMENSIONS

Branchline Clearances

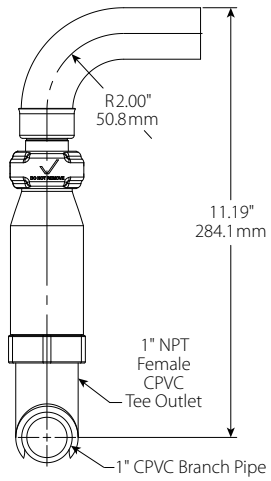

Clearance Chart		
Bend Radius		
	inches mm	inches mm
"R" Minimum Bend Radius	2 51	7 178
"A" Minimum Required Installation Space	11.2 284	16.2 411

FIELD SET TFM# 21689-A, 21689-B, 21689-C PROJECT# 2025-11-03-04

 © 2025 Victaulic Company. All rights reserved.

PLANS AND SPECIFICATIONS ARE REQUIRED TO BE KEPT ON THE JOB SITE UNTIL A FINAL CERTIFICATE OF OCCUPANCY OR PROJECT COMPLETION FORM IS ISSUED BY THE OFFICE.
No alterations, additions or modifications of these plans are allowed to this approved set without written permission of this office.
TENNESSEE STATE FIRE MARSHAL'S OFFICE

5.0 PERFORMANCE

Freeze Protection

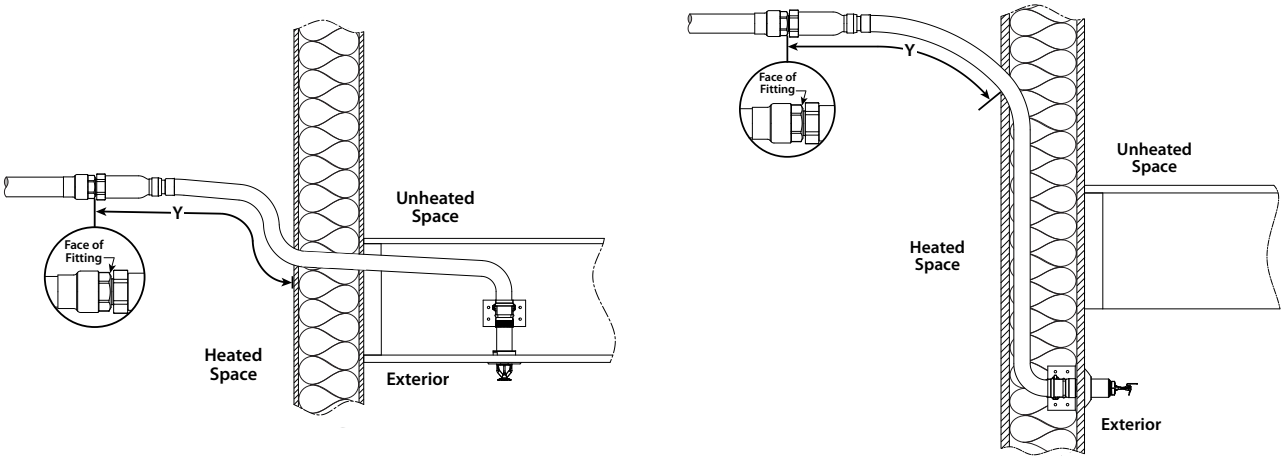

Ambient Temperature Exposed to Discharge End of Sprinkler °F °C	Exposed Minimum Barrel Length "Y" inches mm		
	40°F/4°C	50°F/10°C	60°F/16°C
40 4	0 0	0 0	0 0
30 -1	0 0	0 0	0 0
20 -7	4 100	0 0	0 0
10 -12	8 200	1 25	0 0
0 -18	12 300	3 75	0 0
-10 -23	14 350	4 100	1 25
-20 -29	14 350	6 150	3 75
-30 -34	16 400	8 200	4 100
-40 -40	18 450	8 200	4 100
-50 -46	20 500	10 250	6 150
-60 -51	20 500	10 250	6 150

NOTE

- Exposed minimum barrel lengths are inclusive up to 30-mph/48-kph wind velocities.

Maximum Allowable Number of Bends

Sprinkler Length inches mm	Maximum Allowable Number of 90° Bends at 2"/51mm Bend Radius for UL Listing	Maximum Allowable Number of 90° Bends at 7"/178mm Bend Radius for FM Approval
38 965	4	2
50 1270	4	3
58 1475	4	4

FIELD SET TFM# 21689-A, 21689-B, 21689-C PROJECT# 2025-11-03-04

PLANS AND SPECIFICATIONS JOB SITE REQUIRED TO BE KEPT ON THE UNTIL A FINAL CERTIFICATE OF OCCUPANCY OR PROJECT COMPLETION FORM IS ISSUED BY OFFICE.
No alterations, additions or modifications of approved set without written permission of this office.
TENNESSEE STATE FIRE MARSHAL'S OFFICE

 © 2025 Victaulic Company. All rights reserved.

6.0 NOTIFICATIONS

⚠ WARNING



- **Read and understand all instructions before attempting to install any Victaulic products.**
- **Always verify that the piping system has been completely depressurized and drained immediately prior to installation, removal, adjustment, or maintenance of any Victaulic products.**
- **Wear safety glasses, hardhat, and foot protection.**

- **These products shall be used only in fire protection systems that are designed and installed in accordance with current, applicable National Fire Protection Association (NFPA 13, 13D, 13R, etc.) standards, or equivalent standards, and in accordance with applicable building and fire codes. These standards and codes contain important information regarding protection of systems from freezing temperatures, corrosion, mechanical damage, etc.**
- **The installer shall understand the use of this product and why it was specified for the particular application.**
- **The installer shall understand common industry safety standards and potential consequences of improper product installation.**

⚠ WARNING

- **It is the responsibility of the system designer to verify suitability of 300-series stainless steel flexible hose for use with the intended fluid media within the piping system and external environments.**
- **The effect of chemical composition, pH level, operating temperature, chloride level, oxygen level, and flow rate on 300-series stainless steel flexible hose must be evaluated by the material specifier to confirm system life will be acceptable for the intended service.**
- **It is the responsibility of the owner of a building or their authorized agent to provide the sprinkler system installer with any knowledge that the water supply might be contaminated with or conducive to the development of microbiologically influenced corrosion (MIC), including as required by NFPA 13. Failure to identify adverse water quality issues may affect the VicFlex product and void the manufacturer's warranty.**

Failure to follow these instructions could cause product failure, resulting in serious personal injury and/or property damage.

DO NOT paint, coat, or firestop the outlet/inlet portion of the Series VS1 Sprinkler Assembly. Braided hose and fitting portions of the Series VS1 Sprinkler Assembly may be painted or coated, provided that the paint or coating is compatible with stainless steel material. This includes penetrating through firestop-filled annular space of a firewall. The firestop material in direct contact with the flexible braided hose will not impede the functionality of the Series VS1 Sprinkler Assembly, provided that the components are installed in accordance with Victaulic's installation instructions.

FIELD SET TFM# 21689-A, 21689-B, 21689-C PROJECT# 2025-11-03-04

 © 2025 Victaulic Company. All rights reserved.

PLANS AND SPECIFICATIONS JOB SITE REQUIRED TO BE KEPT ON THE UNTIL A FINAL CERTIFICATE OF OCCUPANCY OR PROJECT COMPLETION FORM IS ISSUED BY OFFICE.
No alterations, additions or modifications of plans are allowed to this approved set without written permission of this office.
TENNESSEE STATE FIRE MARSHAL'S OFFICE

6.0 NOTIFICATIONS (CONTINUED)

Important Installation Notes

1. Shall be installed only in accordance with NFPA 13 Standard for the Installation of Sprinkler Systems and applicable FM Data Sheets.
2. Install and tighten swivel hex nut at inlet of sprinkler fitting only.
3. Do not remove deflector or inlet end of sprinkler.

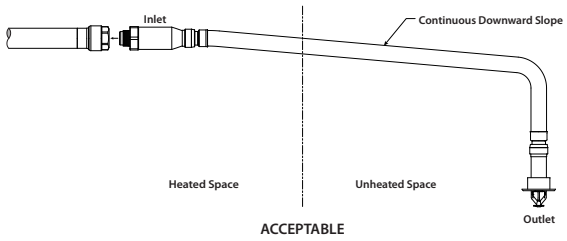

ACCEPTABLE

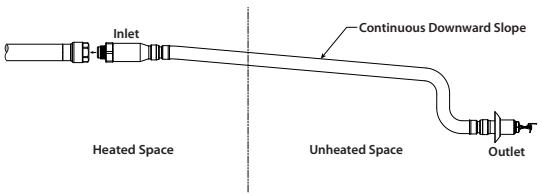

ACCEPTABLE

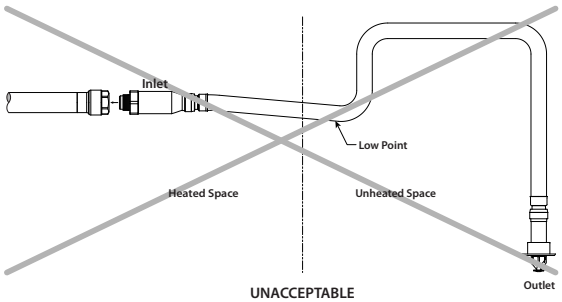

UNACCEPTABLE

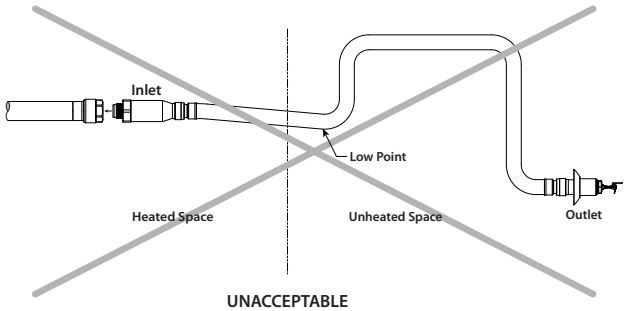

UNACCEPTABLE

FIELD SET TFM# 21689-A, 21689-B, 21689-C PROJECT# 2025-11-03-04

 © 2025 Victaulic Company. All rights reserved.

PLANS AND SPECIFICATIONS ARE REQUIRED TO BE KEPT ON THE JOB SITE UNTIL A FINAL CERTIFICATE OF OCCUPANCY OR PROJECT COMPLETION FORM IS ISSUED BY THE OFFICE.
No alterations, additions or modifications of these plans are allowed to this approved set without written permission of this office.
TENNESSEE STATE FIRE MARSHAL'S OFFICE

6.0 NOTIFICATIONS (CONTINUED)

FOR DRY SYSTEMS ONLY:

- The Series VS1 Dry Sprinkler's inlet shall be installed only into the outlet of a fitting (excluding elbows) or welded outlet that meets the dimensional requirements of ANSI B16.3 and ANSI B16.4, Class 125 and Class 150. Use a sample fitting to confirm proper engagement and to verify that there is no interference between the sprinkler and the fitting

Series VS1 Dry Sprinklers in an unheated space shall be installed with a continuous downward slope along its entire length from the branch line fitting to the sprinkler. No localized low points shall be present along the length of the Series VS1 Dry Sprinkler. Series VS1 Dry Sprinklers in an unheated space are not permitted to be installed into the top of the branch line piping.

Series VS1 Dry Sprinklers shall be installed into the side or from the bottom of the branch line piping. In a heated space, if a portion of the Series VS1 Dry Sprinkler is installed from the top of a branch line and then extends into an unheated space, it shall be installed with a continuous downward slope along the entire length from the inside wall to the outlet of the sprinkler. No localized low points shall be present along the length of the sprinkler in the unheated space. Refer to the drawing below.

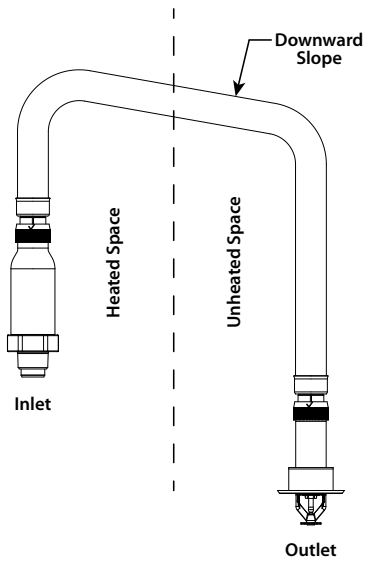

FOR WET SYSTEMS ONLY:

- DO NOT install Victaulic® VicFlex™ Series VS1 Dry Sprinklers into any threaded elbow, threaded-by-thread coupling, or fitting that interferes with thread penetration. The inlet of the Victaulic® VicFlex™ Series VS1 Dry Sprinkler SHALL NOT bottom out in the fitting. Use a sample fitting to confirm proper engagement.
- To ensure unobstructed flow during operation, the Victaulic® VicFlex™ Series VS1 Dry Sprinkler shall be installed into a fitting that will prevent water and debris from accumulating at the dry sprinkler's inlet.
- Verify that the exposed minimum barrel length in the heated space is measured and maintained in accordance with the table on page 1.

In a heated space, if a portion of the Series VS1 Dry Sprinkler extends into an unheated space, it shall be installed with a continuous downward slope along the entire length from the inside wall to the outlet end of the dry sprinkler. No localized low points shall be present along the length of the sprinkler in the unheated space. Refer to the drawing above.

FIELD SET TFM# 21689-A, 21689-B, 21689-C PROJECT# 2025-11-03-04

PLANS AND SPECIFICATIONS JOB SITE REQUIRED TO BE KEPT ON THE JOB SITE UNTIL A FINAL CERTIFICATE OF OCCUPANCY OR PROJECT COMPLETION FORM IS ISSUED BY THIS OFFICE.
No alterations, additions or modifications of these plans are allowed to this approved set without written permission of this office.
TENNESSEE STATE FIRE MARSHAL'S OFFICE

 © 2025 Victaulic Company. All rights reserved.

7.0 REFERENCE MATERIALS

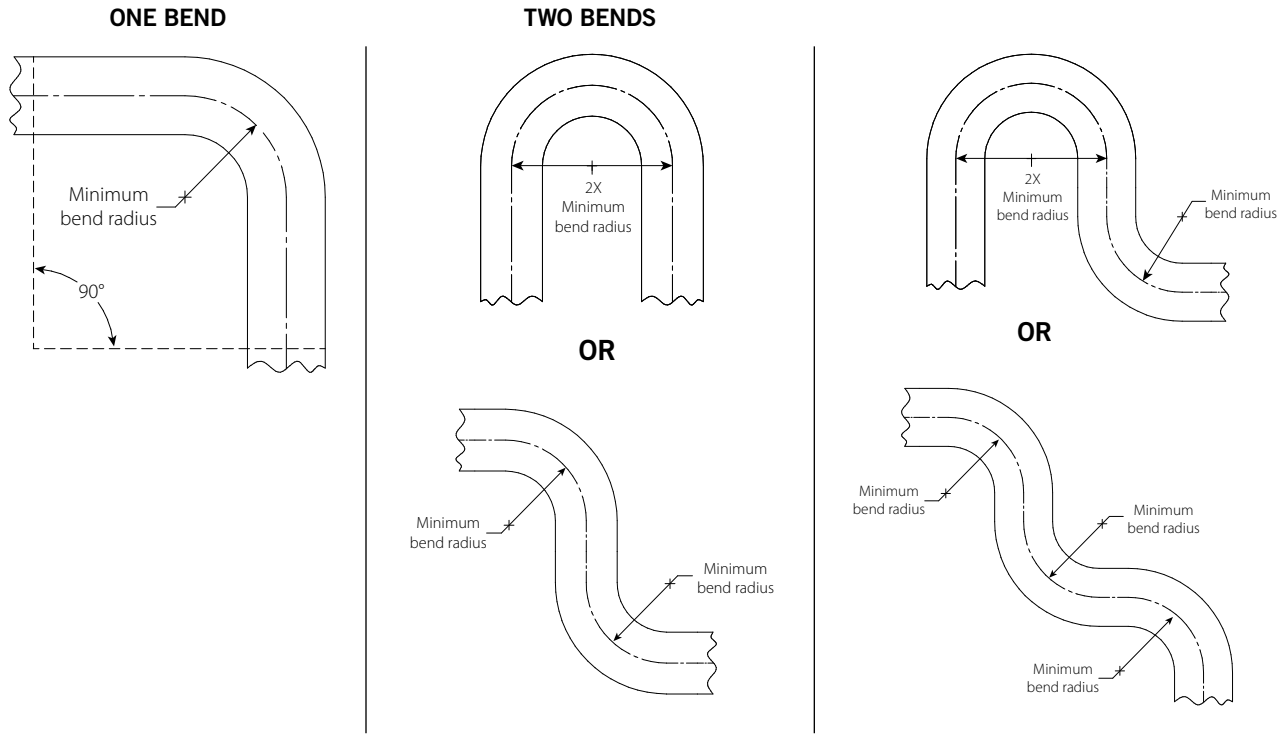

NOTE
For out-of-plane (three-dimensional) bends, care must be taken to avoid imparting torsional stress on the sprinkler.

VicFlex Maximum Load Values

Series FL-DRY/VS1 with 24" Bracket

Length	Total Load		Max. Uniform Load	
in / mm	lb	N	lb/linear ft	N/linear m
38 / 965	5.5	24.5	2.8	40.2
50 / 1270	5.9	26.2	3.0	43.0
58 / 1473	6.2	27.6	3.1	45.3

Series FL-DRY/VS1 with 48" Bracket

Length	Total Load		Max. Uniform Load	
in / mm	lb	N	lb/linear ft	N/linear m
38 / 965	6.8	30.2	1.7	24.8
50 / 1270	7.2	32.0	1.8	26.2
58 / 1473	7.5	33.4	1.9	27.4

Total Load is defined as the sum of the weights of the following:

- Series FL-DRY/VS1 sprinkler
- Bracket assembly (any applicable Victaulic bracket model of the relevant associated size)

ASTM C 635: Suspension System Load-Carrying Capabilities (excerpted)

Suspension System	Actual Length	Min. Allowable Uniform Load	
	ft/m	lb/linear ft	N/linear m
Direct Hung	Light	5	75.7
	Intermediate	12	181
	Heavy	16	241.7

SUMMARY: All direct-hung suspension system duty classifications per ASTM C 635 are able to withstand the maximum water-filled weight of the VicFlex Series FL-DRY/VS1 and bracket.

FIELD SET TFM# 21689-A, 21689-B, 21689-C PROJECT# 2025-11-03-04

PLANS AND SPECIFICATIONS JOB SITE REQUIRED TO BE KEPT ON THE UNTIL A FINAL CERTIFICATE OF OCCUPANCY OR PROJECT COMPLETION FORM IS ISSUED BY OFFICE
No alterations, additions or modifications of plans are allowed to this approved set without written permission of this office.
TENNESSEE STATE FIRE MARSHAL'S OFFICE

 © 2025 Victaulic Company. All rights reserved.

VICFLEX™ STYLE VS1 DRY SPRINKLER ORDER FORM

SHIP TO:

Name:	**Date of Order:**
Address:	**Purchase Order:**
	Ship Via:
City:	**Tag:**
State/Prov.:	**Signature*:**
Zip/Postal Code:	* I agree to purchase the dry sprinklers specified on this form, which are NON-RETURNABLE & NOT CANCELLABLE.

PART CODE CONFIGURATOR: Configure the part code with **options** from chart below. DO NOT circle pipe order lengths and increments. Input appropriate length and quantity for each in the chart below. Please attach additional forms if extra ordering space is needed. **Separate forms must be completed for each configuration ordered.**

A	3F					4				
Class	**Style**	**Connection**	**Deflector**	**Temperature**	**Response**	**K-Factor**	**Sprinkler Finish**	**Escutcheon Finish**	**Flexible Sprinkler Length**	**Escutcheon Style**
A = VicFlex™	**3F** = V35	**3** = 1" NPT **8** = 25mm BSPT	**B** = Pendent **C** = Horizontal Sidewall **P** = Concealed	**A** = 135°F/57°C **C** = 155°F/68°C **E** = 175°F/79°C **F** = 200°F/93°C **J** = 286°F/141°C	**Q** = Quick **S** = Standard	**4** = 5.6K	**4** = White (RAL 9010)[1] **N** = VC-250[2,3] **B** = Black[1]	**X** = Stainless Steel **W** = White (RAL 9010) Painted Stainless Steel **O** = Concealed, No Escutcheon[2,4] **Y** = Black Painted Stainless Steel	**380** = 38" **500** = 50" **580** = 58"	**12** = Recessed **13** = Sleeve & Skirt **15** = Concealed

1 Not available with Deflector **P** = Concealed.
2 Deflector **P** = Concealed is only available with Sprinkler Finish **N** = VC-250 Coating and Escutcheon Finish **O** = Concealed, No Escutcheon.
3 VC-250 coating is only available with stainless steel escutcheons. UL and FM approved corrosion resistant coating, and VdS and LPCB recognized and approved alternate coating. Appears chrome in color.
4 Coverplates sold separately.

Total Sprinklers with specs identical to part code configuration above	

Send completed order form to pickvic@victaulic.com

BRACKET SELECTION: Input quantity for each bracket size.

	Size	Victaulic Part No.	Boxes (5 Brackets per Box)
Style VB1: Wood and metal stud or joist	—	A000000SLV	
Style VB2: Recessed pendent, suspended lay-in tile ceilings	24"	A24TBAR000	
	48"	A48TBAR000	
Style VB3: Concealed pendent, suspended lay-in tile ceilings	24"	A240AQBVB3	
	48"	A480AQBVB3	
Style VB4: Sleeve and skirt pendent, suspended lay-in tile ceilings	24"	A240VB4VS1	
	48"	A480VB4VS1	
Style VB5: Data center ceilings, wood and metal stud or joist	24"	A240VB5001	
	48"	A480VB5001	
Style VBBA: For suspended, exposed and hard-lid ceilings, allows for above mount and cantilever mount	—	A000VBA001	

SF-DRYSPRINKLERS 17227 REV J 01/2025
© 2025 VICTAULIC COMPANY. ALL RIGHTS RESERVED.

PLANS AND SPECIFICATIONS ARE REQUIRED TO BE KEPT ON THE JOB UNTIL A FINAL CERTIFICATE OF OCCUPANCY OR PROJECT COMPLETION FORM IS ISSUED BY THE FIRE MARSHAL'S OFFICE.
No alterations, additions or modifications are allowed to this approved set without written permission of this office.
TENNESSEE STATE FIRE MARSHAL'S OFFICE

FIELD SET TFM# 21689-A, 21689-B, 21689-C PROJECT# 2025-11-03-04

7.0 REFERENCE MATERIALS (CONTINUED)

29.01: Victaulic Terms and Conditions of Sale

I-VICFLEX: Field Installation Handbook

FIELD SET TFM# 21689-A, 21689-B, 21689-C PROJECT# 2025-11-03-04

User Responsibility for Product Selection and Suitability
Each user bears final responsibility for making a determination as to the suitability of Victaulic products for a particular end-use application, in accordance with industry standards and project specifications, and the applicable building codes and related regulations as well as Victaulic performance, maintenance, safety, and warning instructions. Nothing in this or any other document, nor any verbal recommendation, advice, or opinion from any Victaulic employee, shall be deemed to alter, vary, supersede, or waive any provision of Victaulic Company's standard conditions of sale, installation guide, or this disclaimer.

Intellectual Property Rights
No statement contained herein concerning a possible or suggested use of any material, product, service, or design is intended, or should be constructed, to grant any license under any patent or other intellectual property right of Victaulic or any of its subsidiaries or affiliates covering such use or design, or as a recommendation for the use of such material, product, service, or design in the infringement of any patent or other intellectual property right. The terms "Patented" or "Patent Pending" refer to design or utility patents or patent applications for articles and/or methods of use in the United States and/or other countries.

Note
This product shall be manufactured by Victaulic or to Victaulic specifications. All products to be installed in accordance with current Victaulic installation/assembly instructions. Victaulic reserves the right to change product specifications, designs and standard equipment without notice and without incurring obligations.

Installation
Reference should always be made to the Victaulic installation handbook or installation instructions of the product you are installing. Handbooks are included with each shipment of Victaulic products, providing complete installation and assembly data, and are available in PDF format on our website at www.victaulic.com.

Warranty
Refer to the Warranty section of the current Price List or contact Victaulic for details.

Trademarks
Victaulic and all other Victaulic marks are the trademarks or registered trademarks of Victaulic Company, and/or its affiliated entities, in the U.S. and/or other countries.

PLANS AND SPECIFICATIONS JOB SITE REQUIRED TO BE KEPT ON THE COMPLETE UNTIL A FINAL CERTIFICATE OF OCCUPANCY OR PROJECT CONSTRUCTION FORM IS ISSUED BY THIS OFFICE.
No alterations, additions or modifications of these approved set without written permission of this office.
TENNESSEE STATE FIRE MARSHAL'S OFFICE

 © 2025 Victaulic Company. All rights reserved.

Series LFII Residential Sprinklers
4.9 K-factor Recessed Pendent, Dry Type Wet Pipe and Dry Pipe Systems

IMPORTANT

Refer to Technical Data Sheet TFP2300 for warnings pertaining to regulatory and health information.

Always refer to Technical Data Sheet TFP700 for the "INSTALLER WARNING" that provides cautions with respect to handling and installation of sprinkler systems and components. Improper handling and installation can permanently damage a sprinkler system or its components and cause the sprinkler to fail to operate in a fire situation or cause it to operate prematurely.

Scan the QR code or enter the URL in a web browser to access the most up-to-date electronic version of this document. Data rates may apply.

docs.jci.com/tycofire/tfp460

General Description

The TYCO Series LFII Dry Type Residential Recessed Pendent Sprinklers (TY2235) are dry type, decorative, fast response, frangible bulb sprinklers designed for use in residential occupancies such as homes, apartments, dormitories, and hotels.

The Series LFII Dry Type Residential Recessed Pendent Sprinklers (TY2235) are typically used for the following situations:

- where sprinklers are required on dry pipe systems that are exposed to freezing temperatures; for example, sprinkler drops from unheated portions of buildings
- where sprinklers and/or a portion of the connecting piping are exposed to freezing temperatures; for example, sprinkler drops from wet systems into unheated areas
- where sprinklers are used on systems that are seasonally drained to avoid freezing; for example, vacation areas

The Series LFII Dry Type Residential Recessed Pendent Sprinklers are intended for use in residential sprinkler systems for one- and two-family dwellings and mobile homes per NFPA 13D; residential sprinkler systems for residential occupancies up to and including four stories in height per NFPA 13R; or, sprinkler systems for the residential portions of any occupancy per NFPA 13.

The Series LFII Dry Type Residential Recessed Pendent Sprinklers provide flexibility in adjusting sprinklers to the fixed pipe drops. The Recessed Escutcheon provides 1/4 in. (6,4 mm) of recessed adjustment or up to 1/2 in. (12,7 mm) of total adjustment from the flush mounting surface position.

The Series LFII Dry Type Residential Recessed Pendent Sprinklers are designed with heat sensitivity and water characteristics proven to help in controlling residential fires and improving the chance for occupants to escape or be evacuated.

Corrosion-resistant coatings, where applicable, are utilized to extend the life of copper alloy sprinklers beyond that which would otherwise be obtained when exposed to corrosive atmospheres. Although corrosion-resistant coated sprinklers have passed the standard corrosion tests of the applicable Approval agencies, the testing is not representative of all possible corrosive atmospheres. Consequently, it is recommended that the end user be consulted with respect to the suitability of these coatings for any given corrosive environment. The effects of ambient temperature, concentration of chemicals, and gas/chemical velocity should be considered, as a minimum,



NSF Certified to NSF/ANSI 61

along with the corrosive nature of the chemical to which the sprinklers will be exposed.

Dry Pipe System Application

The Series LFII Residential Pendent and Recessed Pendent Sprinklers offers a laboratory approved option for designing dry pipe residential sprinkler systems, whereas, most residential sprinklers are laboratory approved for wet systems only.

Through extensive testing, it has been determined that the number of design sprinklers (hydraulic design area) for the Series LFII Residential Recessed Pendent Sprinklers (TY2235) need not be increased over the number of design sprinklers (hydraulic design area) as specified for wet pipe sprinkler systems, as is accustomed for density/area sprinkler systems designed per NFPA 13.

Consequently, the Series LFII Residential Sprinklers offer the features of non-water filled pipe in addition to not having to increase the number of design sprinklers (hydraulic design area) for systems designed to NFPA 13, 13D, or 13R. Non-water filled pipe will permit options for areas sensitive to freezing.

THESE PLANS ARE REQUIRED TO BE ON THE JOB SITE UNTIL A CERTIFICATE OF OCCUPANCY OR COMPLETION FORM IS ISSUED BY THIS OFFICE.
No alterations, deletions, additions or modifications of any kind are allowed to this approved plan without written permission from this office.
TENNESSEE STATE FIRE MARSHAL'S OFFICE

FIELD SET TFM# 21689-A, 21689-B, 21689-C PROJECT# 2025-11-03-04

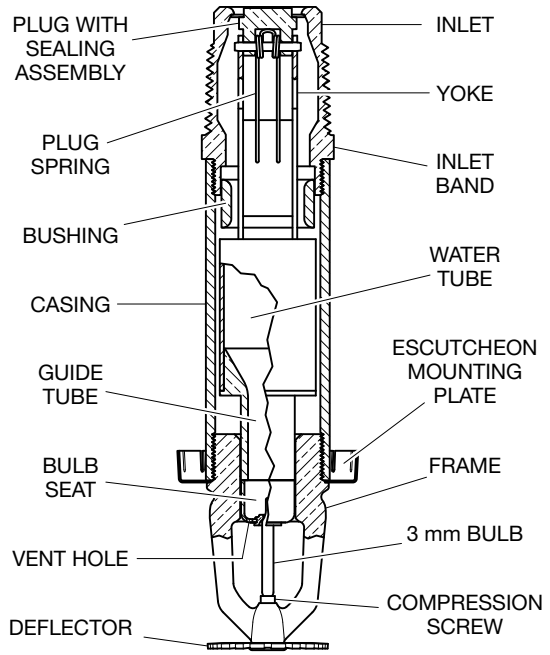

FIGURE 1
SERIES LFII DRY-TYPE RESIDENTIAL PENDENT SPRINKLER ASSEMBLY

NOTICE

The Series LFII Dry Type Residential Recessed Pendent Sprinklers (TY2235) described herein must be installed and maintained in compliance with this document and the applicable standards of the NATIONAL FIRE PROTECTION ASSOCIATION (NFPA), in addition to the standards of any authorities having jurisdiction. Failure to do so may impair the performance of these devices.

The owner is responsible for maintaining their fire protection system and devices in proper operating condition. Contact the installing contractor or product manufacturer with any questions.

Sprinkler Identification Number (SIN)

TY2235

Technical Data

Approvals
UL and C-UL Listed
Certified to all requirements of NSF/ANSI 61

Note: *Sprinklers with a polyester finish are UL and C-UL Listed as corrosion-resistant sprinklers.*

See the Design Criteria section for details on these approvals.

Maximum Working Pressure
175 psi (12,1 bar)

Discharge Coefficient
K = 4.9 GPM/psi½ (70,6 LPM/bar½)

Inlet Thread Connections
1 in. NPT
ISO 7-R1

Sprinkler Temperature Ratings
155°F (68°C)
175°F (79°C) *for wet pipe systems only*

Finishes
Natural Brass, Signal White Polyester Coated, or Chrome Plated

Order Lengths
Minimum: 3-3/4 in. (95,3 mm)
Maximum: 24 in. (609,6 mm)

Physical Characteristics

Inlet	Brass
Plug	Brass
Yoke	Stainless Steel
Casing	Galvanized Steel
Insert	Bronze
Bulb Seat	Stainless Steel
Bulb	Glass
Compression Screw	Brass
Deflector	Brass
Frame	Brass
Guide Tube	Brass
Water Tube	Stainless Steel
Bushing	Brass
Plug Spring	Stainless Steel
Sealing Assembly	Beryllium Nickel w/TEFLON
Escutcheon	Carbon Steel

Operation

When the TYCO Series LFII Dry Type Residential Sprinkler (TY2235) is in service, water is prevented from entering the assembly by the Plug with Sealing Assembly (Figure 1) in the Inlet of the Sprinkler.

The glass Bulb contains a fluid that expands when exposed to heat. When the rated temperature is reached, the fluid expands sufficiently to shatter the glass Bulb to release the Bulb Seat. The system's water or air pressure is then able to unseat the Plug with Sealing Assembly. The Plug Spring turns the Plug with Sealing Assembly aside, allowing the sprinkler to activate and flow water.

Design Criteria

The TYCO Series LFII Dry Type Residential Recessed Pendent Sprinklers (TY2235) are UL and C-UL Listed for installation in accordance with this section:

Residential Sprinkler Design Guide
When conditions exist that are outside the scope of the criteria provided in this section, refer to the technical data sheet entitled Residential Sprinkler Design Guide (TFP490) for the manufacturer's recommendations that may be acceptable to the local authority having jurisdiction.

System Types
Wet pipe and dry pipe systems may be utilized. Refer to Technical Data Sheet TFP485 for the use of residential sprinklers in residential dry pipe systems.

Ceiling Types
Smooth flat horizontal, or beamed, or sloped, in accordance with the 2013 Edition of NFPA 13D, 13R, or 13 as applicable.

Hydraulic Design (NFPA 13D and 13R)
For systems designed to NFPA 13D or NFPA 13R, the minimum required sprinkler flow rate are given in Tables A or B as a function of temperature rating and the maximum allowable coverage areas. The sprinkler flow rate is the minimum required discharge from each of the total number of design sprinklers, as specified in NFPA 13D or NFPA 13R. The number of design sprinklers specified in NFPA 13D and 13R for wet pipe systems is to be applied when designing dry pipe systems.

Hydraulic Design (NFPA 13)
For systems designed to NFPA 13, the number of required design sprinklers is the four most hydraulically demanding sprinklers. The minimum required discharge from each of the four sprinklers is the greater of the following:

FIELD SET TFM# 21689-A, 21689-B, 21689-C PROJECT# 2025-11-03-04

THESE PLANS AND SPECIFICATIONS ARE REQUIRED TO BE ON THE JOB SITE UNTIL A FINAL CERTIFICATE OF OCCUPANCY OR PROJECT COMPLETION FORM IS ISSUED BY THIS OFFICE.
No alterations, deletions, additions or modifications of any kind are allowed to this approved set without written permission of this office.
TENNESSEE STATE FIRE MARSHAL'S OFFICE

Maximum Coverage Area[a] ft x ft (m x m)	Maximum Spacing ft (m)	WET PIPE SYSTEM Minimum Flow and Residual Pressure[b,c]						
		Ordinary Temp Rating 155°F (68°C)		Intermediate Temp Rating 175°F (79°C)		Deflector to Ceiling	Installation Type	Minimum Spacing ft
		Flow GPM (L/min)	Pressure PSI (bar)	Flow GPM (L/min)	Pressure PSI (bar)			
12 x 12 (3,7 x 3,7)	12 (3,7)	13 (49,2)	7.0 (0,48)	13 (49,2)	7.0 (0,48)	Smooth Ceiling: 1-1/4 in. to 1-1/2 in. Beamed Ceiling per NFPA 13D or 13R Installed in Beam: 1-1/4 in. to 1-1/2 in. below bottom of beam	Recessed	8 (2,4)
14 x 14 (4,3 x 4,3)	14 (4,3)	14 (52,9)	8.2 (0,57)	14 (52,9)	8.2 (0,57)			
16 x 16 (4,9 x 4,9)	16 (4,9)	15 (56,8)	9.4 (0,65)	15 (56,8)	9.4 (0,65)			
18 x 18 (5,5 x 5,5)	18 (5,5)	18 (68,1)	13.5 (0,93)	18 (68,1)	13.5 (0,93)			
20 x 20 (6,1 x 6,1)	20 (6,1)	21 (79,5)	18.4 (1,3)	21 (79,5)	18.4 (1,3)			

Notes:
a. For coverage area dimensions less than or between those indicated, use the minimum required flow for the next highest coverage area for which hydraulic design criteria are stated.
b. Requirement is based on minimum flow in GPM (LPM) from each sprinkler. The associated residual pressures are calculated using the nominal K-factor. See Hydraulic Design under the Design Criteria section.
c. For NFPA 13 residential applications, the greater of 0.1 gpm/ft² over the design area or the flow in accordance with the criteria in Table A must be used.

TABLE A
WET PIPE SYSTEM
SERIES LFII RESIDENTIAL DRY-TYPE RECESSED PENDENT SPRINKLERS (TY2235)
NFPA 13D, 13R, AND 13 HYDRAULIC DESIGN CRITERIA
UL LISTED

Maximum Coverage Area[a] ft x ft (m x m)	Maximum Spacing ft (m)	DRY PIPE SYSTEM Minimum Flow and Residual Pressure[b,c]				
		Ordinary Temp Rating 155°F (68°C)		Deflector to Ceiling	Installation Type	Minimum Spacing ft
		Flow GPM (L/min)	Pressure PSI (bar)			
12 x 12 (3,7 x 3,7)	12 (3,7)	13 (49,2)	7.0 (0,48)	Smooth Ceiling: 1-1/4 in. to 1-1/2 in. Beamed Ceiling per NFPA 13D or 13R Installed in Beam: 1-1/4 in. to 1-1/2 in. below bottom of beam	Recessed	8 (2,4)
14 x 14 (4,3 x 4,3)	14 (4,3)	14 (52,9)	8.2 (0,57)			
16 x 16 (4,9 x 4,9)	16 (4,9)	15 (56,8)	9.4 (0,65)			
18 x 18 (5,5 x 5,5)	18 (5,5)	18 (68,1)	13.5 (0,93)			
20 x 20 (6,1 x 6,1)	20 (6,1)	21 (79,5)	18.3 (1,3)			

Notes:
a. For coverage area dimensions less than or between those indicated, use the minimum required flow for the next highest coverage area for which hydraulic design criteria are stated.
b. Requirement is based on minimum flow in GPM (LPM) from each sprinkler. The associated residual pressures are calculated using the nominal K-factor. See Hydraulic Design under the Design Criteria section.
c. For NFPA 13 residential applications, the greater of 0.1 gpm/ft² over the design area or the flow in accordance with the criteria in Table B must be used.

TABLE B
DRY PIPE SYSTEM
SERIES LFII RESIDENTIAL DRY-TYPE RECESSED PENDENT SPRINKLERS (TY2235)
NFPA 13D, 13R, AND 13 HYDRAULIC DESIGN CRITERIA
UL LISTED

FIELD SET TFM# 21689-A, 21689-B, 21689-C PROJECT# 2025-11-03-04

THESE PLANS AND SPECIFICATIONS ARE REQUIRED TO BE KEPT ON THE JOB SITE UNTIL A FINAL CERTIFICATE OF OCCUPANCY OR PROJECT COMPLETION FORM IS ISSUED BY THIS OFFICE.
No alterations, deletions, additions or modifications of any kind are allowed to this approved set without written permission of this office.
TENNESSEE STATE FIRE MARSHAL'S OFFICE

Ambient Temperature Exposed to Discharge End of Sprinkler	Temperatures for Heated Area(1)		
	40°F (4°C)	50°F (10°C)	60°F (16°C)
	Minimum Exposed Barrel Length(2), in. (mm)		
40°F (4°C)	0	0	0
30°F (-1°C)	0	0	0
20°F (-7°C)	4 (100)	0	0
10°F (-12°C)	8 (200)	1 (25)	0
0°F (-18°C)	12 (305)	3 (75)	0
-10°F (-23°C)	14 (355)	4 (100)	1 (25)
-20°F (-29°C)	14 (355)	6 (150)	3 (75)
-30°F (-34°C)	16 (405)	8 (200)	4 (100)
-40°F (-40°C)	18 (455)	8 (200)	4 (100)
-50°F (-46°C)	20 (510)	10 (255)	6 (150)
-60°F (-51°C)	20 (510)	10 (255)	6 (150)

Notes:
1. For protected area temperatures that occur between values listed above, use the next cooler temperature.
2. These lengths are inclusive of wind velocities up to 30 mph (18,6 kph).

TABLE C
MINIMUM RECOMMENDED LENGTHS OF EXPOSED SPRINKLER BARRELS IN WET PIPE SYSTEMS

- flow rates listed in Table A or B as a function of temperature rating and the maximum allowable coverage area.
- minimum discharge of 0.1 gpm/ft² over the design area comprised of the four most hydraulically demanding sprinklers for the actual coverage areas protected by four sprinklers.

The number of design sprinklers specified in NFPA 13 for wet pipe systems is to be applied when designing dry pipe systems.

Dry Pipe System Water Delivery
When using the Series LFII Residential Sprinklers (TY2235) in dry pipe sprinkler systems, the time for water delivery must not exceed 15 seconds for the most remote operating sprinkler.

Obstruction to Water Distribution
Sprinklers are to be located in accordance with the obstruction rules of NFPA 13D, 13R, and 13 as applicable for residential sprinklers as well as with the obstruction criteria described within the TYCO Technical Data Sheet TFP490.

Operational Sensitivity
The sprinkler must be located relative to the mounting surface as shown in Figure 2.

Sprinkler Spacing
The minimum spacing between sprinklers is 8 ft (2,4 m). The maximum spacing between sprinklers cannot exceed the length of the coverage area (Table A) being hydraulically calculated (for example, a maximum of 12 ft for a 12 ft x 12 ft coverage area or 20 ft for a 20 ft x 20 ft coverage area.)

Sprinkler Fittings
The following fittings may be used:

- The 1 in. NPT outlet or run of a malleable or ductile iron threaded tee fittings that meet the dimensional requirements of ANSI B16.3 (Class 150)
- The 1 in. NPT outlet or run of a cast iron threaded tee fittings that meet the dimensional requirements of ANSI B16.4 (Class 125).

  For dry pipe systems, only use the side outlet of maximum 2-1/2 in. size reducing tees when locating the Series LFII Dry Type Residential Recessed Pendent Sprinklers directly below the branch line. Otherwise, use the configuration shown in Figure 5 to assure complete drainage from above the Series LFII Sprinklers and the branch line.

  Do not install the Series LFII Dry Type Residential Recessed Pendent Sprinklers into elbow fittings. The Inlet of the sprinkler can contact the interior of the elbow, potentially damaging the Inlet seal.

  Only use the configuration in Figure 4 where the sprinkler fitting and water-filled pipe above the sprinkler fitting are not subject to freezing and where the length of the Series LFII Sprinkler has the minimum exposure length per Figure 6. See the Exposure Length section and Table C.
- The 1 in. NPT outlet of a GRINNELL Figure 730 Mechanical Tee in wet pipe systems only
- The 1 in. NPT CPVC outlet of a 1 in. x 1 in. x 1 in. NPT sprinkler head adapter tee in wet pipe systems only
- The 1 in. NPT CPVC outlet of a 1 in. x 1 in. NPT female adapter in wet pipe systems only
- The 1 in. NPT outlet of a 1 in. x 1 in. x 1 in. NPT CPVC sprinkler head adapter tee in either wet or dry pipe systems

Note: *For more information on specific CPVC fitting design and installation criteria, refer to CPVC manufacturer.*

NOTICE

Do not install the Series LFII Dry Type Residential Recessed Pendent Sprinklers into any other type fitting without first consulting the Technical Services Department. Failure to use the appropriate fitting may result in the following:

- *failure of the sprinkler to operate properly due to formation of ice over the Inlet Plug or binding of the Inlet Plug.*
- *insufficient engagement of the inlet pipe threads with consequent leakage.*

Drainage
Branch, cross, and feed-main piping connected to Series LFII Dry Type Residential Recessed Pendent Sprinklers and subject to freezing temperatures must be pitched to allow proper drainage, in accordance with the minimum requirements of the NATIONAL FIRE PROTECTION ASSOCIATION for dry pipe sprinkler systems.

Exposure Length
When using Series LFII Dry Type Residential Recessed Pendent Sprinklers in wet pipe sprinkler systems to protect areas subject to freezing temperatures, use Table C to determine a sprinkler's appropriate exposed barrel length to prevent water from freezing in the connecting pipes due to conduction. The exposed barrel length measurement must be taken from the face of the sprinkler fitting to the surface of the structure or insulation that is exposed to the heated area. See Figure 6 for an example.

Clearance Space
When connecting an area subject to freezing and an area containing a wet pipe sprinkler system, the clearance space around the sprinkler barrel of Dry Type Residential Recessed Pendent Sprinklers must be sealed, in accordance with the NATIONAL FIRE PROTECTION ASSOCIATION. Due to temperature differences between two areas, the potential for the formation of condensation in the sprinkler and subsequent ice build-up is increased. If this condensation is not controlled, ice build-up can occur that might damage the dry type sprinkler and/or prevent proper operation in a fire situation.

Use of the Model DSB-2 Dry Sprinkler Boot, described in Technical Data Sheet TFP591 and shown in Figures 4 through 6, can provide the recommended seal.

FIELD SET TFM# 21689-A, 21689-B, 21689-C PROJECT# 2025-11-03-04

TENNESSEE STATE FIRE MARSHAL'S OFFICE

Installation

The TYCO Series LFII Dry Type Residential Recessed Pendent Sprinklers must be installed in accordance with this section:

General Instructions
The Series LFII Dry Type Residential Recessed Pendent Sprinklers must only be installed in fittings that meet the requirements of the Design Criteria section. For other important requirements regarding piping design and sealing of the clearance space around the Sprinkler Casing, see the Design Criteria section.

Do not install any bulb type sprinkler if the Bulb is cracked or there is a loss of liquid from the Bulb. With the sprinkler held horizontally, a small air bubble should be present. The diameter of the air bubble is approximately 1/16 in. (1,6 mm).

A leak-tight 1 in. NPT sprinkler joint should be obtained by applying a minimum-to-maximum torque of 20 to 30 lb-ft (26,8 to 40,2 N·m). Higher levels of torque can distort the sprinkler Inlet or Frame with consequent leakage or impairment of the sprinkler.

Do not attempt to compensate for insufficient adjustment in an Escutcheon Plate or Cover-Retainer Assembly by under- or over-tightening the Sprinkler. Re-adjust the position of the sprinkler fitting to suit.

Step 1. Install pendent sprinklers only in the pendent position with the deflector parallel to the ceiling.

Step 2. With a non-hardening pipe-thread sealant such as Teflon tape applied to the inlet threads, hand-tighten the sprinkler into the sprinkler fitting.

Step 3. Wrench-tighten the sprinkler using a pipe wrench on the Inlet Band or the Casing (Figure 1) or using the W-Type 7 Sprinkler Wrench on the Wrench Flat (Figure 3). Apply the Wrench Recess of the W-Type 7 Sprinkler Wrench to the Wrench Flat.

If sprinkler removal is necessary, remove the sprinkler using the same wrenching method noted above. Sprinkler removal is easier when a non-hardening sealant was used and torque guidelines were followed. After removal, inspect the sprinkler for damage.

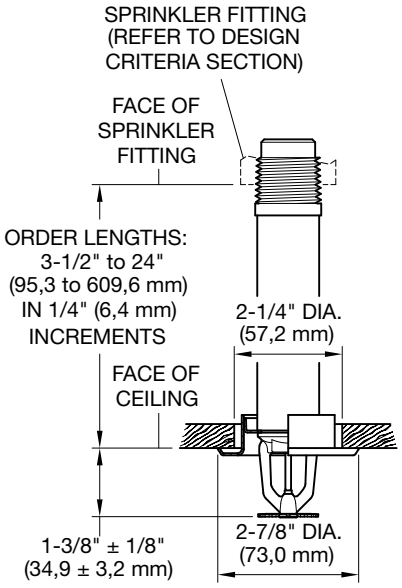

FIGURE 2
SERIES LFII DRY-TYPE RESIDENTIAL PENDENT SPRINKLER (TY2235) WITH RECESSED ESCUTCHEON

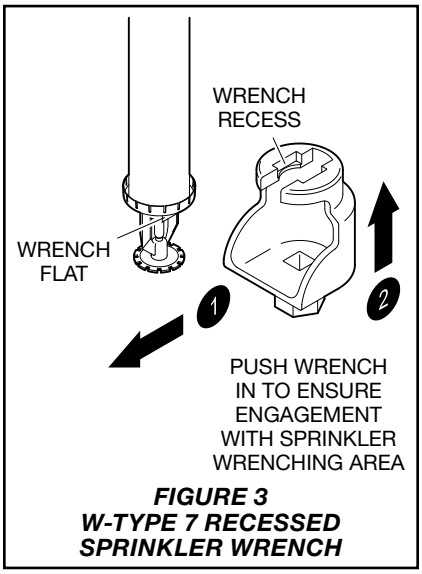

FIGURE 3
W-TYPE 7 RECESSED SPRINKLER WRENCH

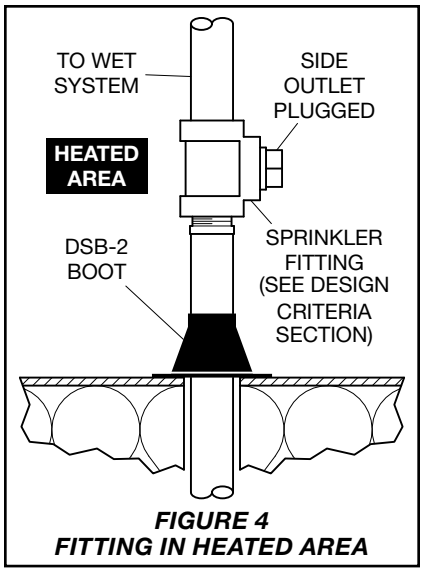

FIGURE 4
FITTING IN HEATED AREA

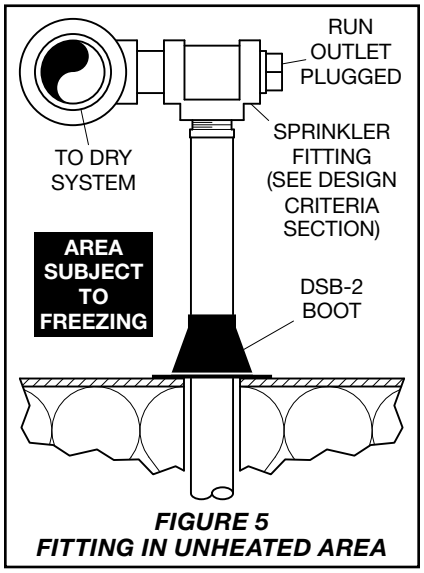

FIGURE 5
FITTING IN UNHEATED AREA

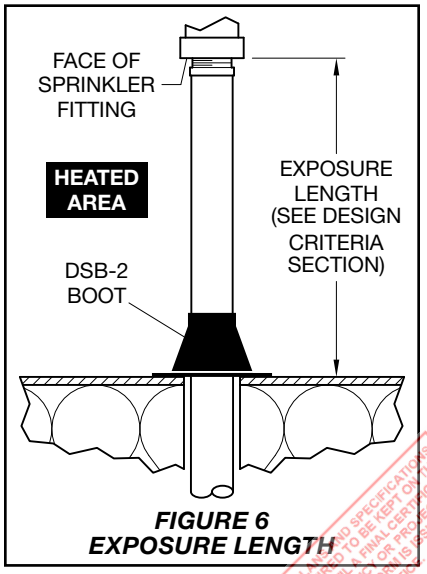

FIGURE 6
EXPOSURE LENGTH

FIELD SET TFM# 21689-A, 21689-B, 21689-C PROJECT# 2025-11-03-04

THESE PLANS AND SPECIFICATIONS ARE REQUIRED TO BE KEPT ON THE JOB SITE UNTIL A FINAL CERTIFICATE OF OCCUPANCY OR PROJECT COMPLETION FORM IS ISSUED BY THIS OFFICE.
No alterations, deletions, additions or modifications of any kind are allowed to this approved set without written permission of this office.
TENNESSEE STATE FIRE MARSHAL'S OFFICE

P/N[1] 63 — XXX — X — XXX

		SIN
10	PENDENT WITH RECESSED ESCUTCHEON	TY2235

	TEMPERATURE RATING
1	155°F (68°C)
2	175°F (79°C)[2]

	SPRINKLER FINISH	ESCUTCHEON FINISH
2	NATURAL BRASS	BRASS PLATED
4	SIGNAL WHITE (RAL9003) POLYESTER[3]	SIGNAL WHITE (RAL9003) POLYESTER
9	CHROME PLATED	CHROME PLATED

	ORDER LENGTH (EXAMPLES)
055	5.50 in.
082	8.25 in.
180	18.00 in.
187	18.75 in.
240	24.00 in.

Notes:
1. Use Prefix "I" for ISO 7-R 1 Inlet Thread Connection (e.g., I-63-101-9-180)
2. Wet pipe system only
3. UL and C-UL Listed as corrosion-resistant

TABLE D
SERIES LFII DRY-TYPE RESIDENTIAL RECESSED PENDENT SPRINKLERS (TY2235)
PART NUMBER SELECTION

Care and Maintenance

The TYCO Series LFII Dry Type Residential Recessed Pendent Sprinklers (TY2235) must be maintained and serviced in accordance with this section:

Before closing a fire protection system main control valve for maintenance work on the fire protection system that it controls, obtain permission to shut down the affected fire protection systems from the proper authorities and notify all personnel who may be affected by this action.

Absence of a Recessed Escutcheon Plate to cover a clearance hole can delay sprinkler operation in a fire situation.

The owner must assure that the sprinklers are not used for hanging any objects and that the sprinklers are only cleaned by means of gently dusting with a feather duster; otherwise, non-operation in the event of a fire or inadvertent operation may result.

A Vent Hole is provided in the Bulb Seat (Figure 1) to indicate if the Series LFII Dry Type Residential Sprinkler is remaining dry. Evidence of leakage from the Vent Hole indicates potential leakage past the Plug with Sealing Assembly and the need to remove the sprinkler to determine the cause of leakage (for example, an improper installation or an ice plug). Close the fire protection system control valve and drain the system before removing the sprinkler.

Sprinklers which are found to be leaking or exhibiting visible signs of corrosion must be replaced.

Automatic sprinklers must never be painted, plated, coated, or otherwise altered after leaving the factory. Modified sprinklers must be replaced. Sprinklers that have been exposed to corrosive products of combustion, but have not operated, should be replaced if they cannot be completely cleaned by wiping the sprinkler with a cloth or by brushing it with a soft bristle brush.

Care must be exercised to avoid damage to the sprinklers - before, during, and after installation. Sprinklers damaged by dropping, striking, wrench twist/slippage, or the like, must be replaced. Also, replace any sprinkler that has a cracked bulb or that has lost liquid from its bulb. See the Installation section for additional information.

The owner is responsible for the inspection, testing, and maintenance of their fire protection system and devices in compliance with this document, as well as with the applicable standards of the NATIONAL FIRE PROTECTION ASSOCIATION, for example, NFPA 25, in addition to the standards of any authorities having jurisdiction. Contact the installing contractor or product manufacturer with any questions.

Automatic sprinkler systems are recommended to be inspected, tested, and maintained by a qualified Inspection Service in accordance with local requirements and/or national codes.

Limited Warranty

For warranty terms and conditions, visit www.tyco-fire.com.

Ordering Procedure

Contact your local distributor for availability. When placing an order, indicate the full product name and Part Number (P/N).

Pendent Sprinkler with Recessed Escutcheon

Note: *Unless otherwise indicated, see Table D.*

Specify: Series LFII Dry Type Residential Recessed Pendent Sprinkler, SIN TY2235, Recessed Escutcheon, 4.9 K-factor, Temperature Rating (specify), Sprinkler Finish (specify), Escutcheon Finish (specify), Order Length (specify value per Figure 2), Inlet Thread Size (1 in. NPT or ISO 7-R 1), P/N (specify)

Separately Ordered Sprinkler Wrench
Specify: W-Type 7 Sprinkler Wrench, P/N 56-850-4-001

Separately Ordered Escutcheon
Specify: Style 20 Recessed Escutcheon with (specify*) finish, P/N (specify*)

*Refer to Technical Data Sheet TFP770

FIELD SET TFM# 21689-A, 21689-B, 21689-C PROJECT# 2025-11-03-04

THESE PLANS AND SPECIFICATIONS ARE REQUIRED TO BE KEPT ON THE JOB SITE UNTIL A FINAL CERTIFICATE OF OCCUPANCY OR PROJECT COMPLETION FORM IS ISSUED BY THIS OFFICE.
No deletions, additions or changes of any kind are allowed to this document without written permission from this office.
TENNESSEE STATE FIRE MARSHAL'S OFFICE

1467 Elmwood Avenue, Cranston, RI 02910 | Telephone +1-401-781-8220

© 2024 Johnson Controls. All rights reserved. All specifications and other information shown were current as of document revision date and are subject to change without notice.

NATIONAL FIRE PROTECTION ASSOCIATION and NFPA are registered trademarks of National Fire Protection Association;
TEFLON is a trademark of The Chemours Company FC, LLC

Johnson Controls

Sprinkler Heads

FIELD SET TFM# 21689-A, 21689-B, 21689-C PROJECT# 2025-11-03-04

THESE PLANS AND SPECIFICATIONS ARE REQUIRED TO BE KEPT ON THE JOB SITE UNTIL A FINAL CERTIFICATE OF OCCUPANCY OR PROJECT COMPLETION FORM IS ISSUED BY THIS OFFICE.
No alterations, deletions, additions or modifications of any kind are allowed to this approved set without written permission of this office.
TENNESSEE STATE FIRE MARSHAL'S OFFICE

Reliable®

Model KFR-CCS
Combustible Concealed Space Sprinkler

K-factor 5.6 (80); SIN RA4454
cULus Listed

FIELD SET TFM# 21689-A, 21689-B, 21689-C PROJECT# 2025-11-03-04

Features

- cULus Listed for areas of coverage up to 256 square feet
- Fast response 212°F (100°C) fusible link operating element
- Draft curtains not required for wood truss construction

Product Description

The Reliable Model KFR-CCS Combustible Concealed Space Sprinkler is an upright, special sprinkler designed to provide protection of specific light hazard combustible and noncombustible concealed spaces requiring sprinkler protection.

The Model KFR-CCS Sprinkler utilizes a fast response solder-link fusible element that has demonstrated response times in laboratory tests which are five to ten times faster than standard response sprinklers. This feature enables the sprinkler to apply water to a fire much faster than standard response sprinklers of the same temperature rating.

Application

The Model KFR-CCS sprinkler is specifically listed for the protection of horizontal combustible concealed spaces up to 36" deep as described in NFPA 13 and as detailed in this bulletin.

In addition, the Model KFR-CCS sprinkler is specifically listed for the protection of horizontal combustible concealed spaces with wood truss and bar joist construction up to and including 60" (900 mm) deep.

Installation

Model KFR-CCS Sprinklers are to be installed in the upright position with their frames arms parallel to the pipe. When installing the Model KFR-CCS sprinkler use only the Reliable Model W2 installation wrench. Usage of any other type of installation wrench may damage the sprinkler and will void the manufacturer's warranty. Damaged sprinklers must be immediately replaced. A leak tight ½" NPT (R1/2) sprinkler joint can be obtained with an installation torque of approximately 8 -18 ft-lbs (10.8 – 24.4 N·m) after application of an appropriate thread sealant. Do not tighten sprinklers over these recommended limits. Doing so may cause leakage and/or premature operation.



Model W2 Wrench

Important! Reliable fire sprinklers must be handled, stored, and installed in accordance with the guidelines in Caution Sheet 310 and this bulletin. Failure to follow these instructions may result in unintended operation or nonoperation of the fire protection system.



Maintenance

Reliable Model KFR-CCS series sprinklers should be inspected and the sprinkler system maintained in accordance with NFPA 25, as well as the requirements of any Authorities Having Jurisdiction. Prior to installation, sprinklers should remain in the original cartons and packaging until used. This will minimize the potential for damage to sprinklers that could cause improper operation or non-operation.

Do not clean sprinklers with soap and water, ammonia liquid or any other cleaning fluids. Remove dust by gentle vacuuming without touching the sprinkler.

Replace any sprinkler which has been painted (other than factory applied). A stock of spare sprinklers should be maintained to allow quick replacement of damaged or operated sprinklers. Failure to properly maintain sprinklers may result in inadvertent operation or non-operation during a fire event.

Guarantee

For Reliable Automatic Sprinkler Co., Inc. guarantee, terms, and conditions, visit www.reliablesprinkler.com.

Ordering Information

Specify: Model KFR-CCS Sprinkler
W2 Wrench

THESE PLANS AND SPECIFICATIONS ARE REQUIRED TO BE KEPT ON THE JOB SITE UNTIL A FINAL CERTIFICATE OF OCCUPANCY OR PROJECT COMPLETION FORM IS ISSUED BY THIS OFFICE.
No alterations, deletions, additions or modifications of any kind are allowed to this approved set without written permission of this office.
TENNESSEE STATE FIRE MARSHAL'S OFFICE

Model KFR-CCS Combustible Concealed Space Upright Sprinkler — SIN RA4454

Technical Specifications
Style: Upright
Threads: 1/2" NPT or ISO7-1R1/2
Nominal K-Factor: 5.6 (80 metric)
Max. Working Pressure: 175 psi (12 bar)

Material Specifications
Thermal Sensor: Nickel Alloy
Sprinkler Frame: Brass Alloy
Button: Copper Alloy
Sealing Assembly: Nickel Alloy with PTFE
Load Screw: Bronze Alloy
Deflector: Bronze Alloy

Finish
Standard Brass

Temperature Ratings
212°F (100°C)

Sensitivity
Fast Response

Sprinkler Wrench
Model W2

Approvals
cULus Listed



Model KFR-CCS Components and Installation Dimensions — Figure 1

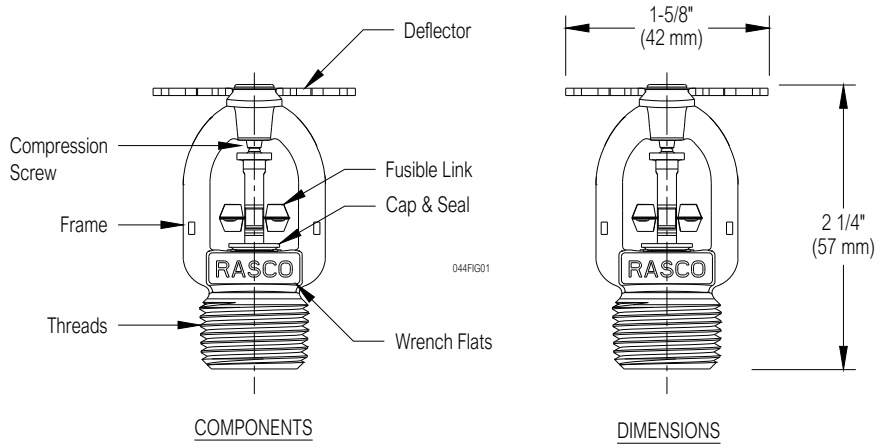

Model KFR-CCS General Application Criteria

Minimum Distance (Spacing) Between Sprinklers: 6 ft (1.83 m)
Note: The minimum distance does not apply to any additional sprinklers that are required for protection of CPVC piping that is offset over an obstruction.

Maximum Distance (Spacing) Between Sprinklers: (Refer to Figures 2 through 7)

Maximum Coverage Area Per Sprinkler: (Refer to Figures 2 through 7)

Deflector Distance: (Refer to Figures 2 through 7)

Minimum Distance Away From Face of Wood Truss or Top Chord of Bar Joist: 4-1/2 in. (114 mm)

Obstruction Rules:
1. Sprinklers may not be installed such that the deflector is above the bottom of the top chord of trusses or joists.
2. Gusset plates, truss members, or bar joist members (other than top chords) shall not be considered obstructions provided a minimum 4-1/2 in. (114 mm) lateral distance from the edge of the member to the centerline of the sprinkler (required by the specific application listing) is maintained.
3. Where the Model KFR-CCS sprinkler is spaced over 225 ft^2 (20.9 m^2), apply the obstruction rules found in NFPA 13 for extended coverage sprinklers, except as noted in #2 above.
4. Where the Model KFR-CCS sprinkler is spaced 225 ft^2 (20.9 m^2) or less, apply the obstruction rules found in NFPA 13 for standard spray sprinklers, except as noted in #2 above.

FIELD SET TFM# 21689-A, 21689-B, 21689-C PROJECT# 2025-11-03-04

THESE PLANS AND SPECIFICATIONS ARE REQUIRED TO BE KEPT ON THE JOB SITE UNTIL A FINAL CERTIFICATE OF OCCUPANCY OR PROJECT COMPLETION FORM IS ISSUED BY THIS OFFICE.
Any revisions, deletions, additions or modifications of any kind are allowed to this approved set without written permission of this office.
TENNESSEE STATE FIRE MARSHAL'S OFFICE

Application Criteria for Unobstructed Wood Truss Construction

The Model KFR-CCS Sprinkler is specifically listed to provide protection of combustible concealed spaces where (a) the construction method consists of wood trusses or bar joists with top chord depth not exceeding 4 in. (100 mm), (b) the maximum depth of the space is 60 in. (1.5 m) as measured from bottom of deck to top of ceiling, and (c) the slope of the upper deck does not exceed 2 in 12. (See Figures 2 and 3).

Application Criteria for Obstructed Wood Truss Construction

The Model KFR-CCS Sprinkler is specifically listed to provide protection of combustible concealed spaces where (a) the construction method consists of wood trusses or bar joists with top chord depth exceeding 4 in. (100 mm), (b) the maximum depth of the space is 60 in. (1.5 m) as measured from bottom of deck to top of ceiling, and (c) the slope of the upper deck does not exceed 2 in 12. (See Figure 4).

Application Criteria for Solid or Composite Wood Joist Construction

The Model KFR-CCS Sprinkler is specifically listed to provide protection of combustible concealed spaces where (a) the construction method consists of solid or composite wood joists, (b) the depth of the space does not exceed 36 in. (900 mm) as measured from the bottom of the upper joist to top of the bottom joist (or ceiling if joists are not present), and (c) the slope of the upper deck does not exceed 2 in 12. (See Figures 5, 6, and 7).

Special Requirements When Using CPVC Materials

Unless modified by this technical bulletin, all guidelines provided by the CPVC pipe and fitting manufacturer must be followed.

When using CPVC pipe and fittings, the bottom of horizontal runs of pipe must be a maximum of 6 in. (150 mm) above the ceiling or noncombustible ceiling insulation, or 1/3 the depth of concealed space (as measured from the top surface of the ceiling to the bottom of the deck above), whichever is smaller.

Where the members at the bottom of the concealed space are greater than 6 in. (150 mm) tall, installing CPVC piping directly on top of those members shall be permitted.

When using 1 in. (DN25) or larger pipe, a hanger must be located at the truss nearest a sprig for purposes of restraint. If using 3/4 in. (DN19) piping, all sprigs over 12 in. (300 mm) must be laterally braced using methods described in the NFPA standards.

Where CPVC pipe must be offset up and over an obstruction, the CPVC pipe must be kept within 6 in. of the obstruction and additional Model KFR-CCS Sprinklers are to be installed to protect the CPVC material.

A minimum lateral distance of 18 in. (460 mm) must be maintained between the CPVC pipe and heat pumps, fan motors, and heat lamps.

CPVC piping can be used to supply the Model KFR-CCS Sprinklers as well as sprinklers installed below the ceiling.

CPVC risers passing through the horizontal combustible concealed space must be protected using one of the three options shown in Figure 8.

Draft Curtain Requirements

Where provided or required, draft curtains for unobstructed wood trusses shall be at least 1/3 the depth of the concealed space or 8 in. (200 mm), whichever is greater. Where provided or required, draft curtains for obstructed wood trusses, solid wood joists, or composite wood joists shall be at least 1/3 the depth of the concealed space or 6 in. (150 mm), whichever is greater. Draft curtains shall be constructed using minimum 1/4 in. plywood or other material that will not allow heat to escape through or pass above the draft curtain. Full height walls and structural members of the appropriate depth are acceptable substitutes for draft curtains.

General Hydraulic Design Requirements

System Types:	Wet (CPVC or Steel Pipe); Dry or Preaction (Steel Pipe only)
Design Method:	Density/Area per NFPA 13, except as modified herein
Hazard Classification:	Light Hazard
Minimum Density:	0.10 gpm/ft^2 (4.1 Lpm/m^2)
Minimum Operating Pressure:	7 psi (0.48 bar)
Design Area:	(Reference Figures 2 through 7)

FIELD SET TFM# 21689-A, 21689-B, 21689-C PROJECT# 2025-11-03-04

THESE PLANS AND SPECIFICATIONS ARE REQUIRED TO BE KEPT ON THE JOB SITE UNTIL A FINAL CERTIFICATE OF OCCUPANCY OR PROJECT COMPLETION FORM IS ISSUED BY THIS OFFICE.
Any alterations, deletions, additions or modifications of any kind are allowed to this approved set without written permission of this office.
TENNESSEE STATE FIRE MARSHAL'S OFFICE

Draft Curtains: Not Required (See Hydraulic Design notes below)

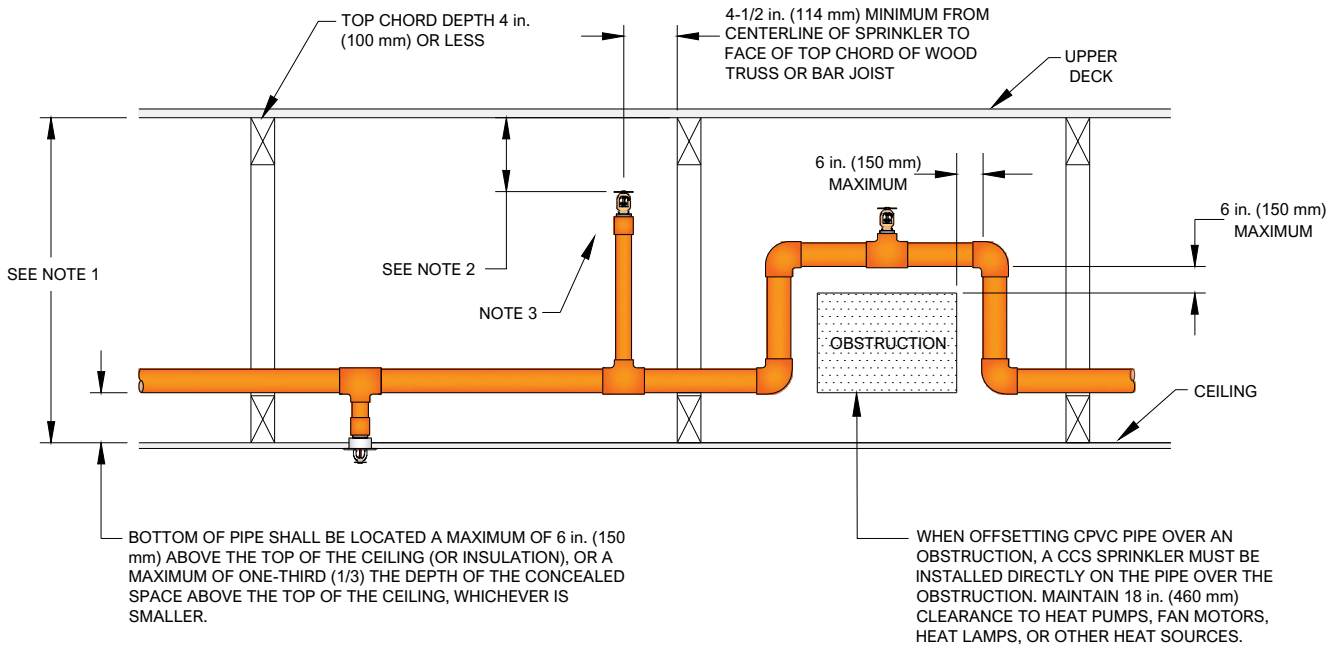

INSTALLATION NOTES:

1. DISTANCE EVALUATED AS PART OF THE cULus LISTING: 12 in. TO 60 in. (300 mm TO 1500 mm). NFPA 13 PERMITS INSTALLATION OF THE SPRINKLER WHERE THIS DISTANCE IS LESS THAN 12 in. (300 mm).
2. DEFLECTOR DISTANCE TO BE NO MORE THAN 2 in. (50 mm) BELOW BOTTOM OF THE TOP TRUSS CHORD. IN NO CASE SHALL DEFLECTOR BE ABOVE THE BOTTOM OF THE TOP TRUSS CHORD.
3. INSTALL SPRINKLER WITH FRAME ARMS PARALLEL TO PIPE.

SPRINKLER SPACING AND COVERAGE AREA

A. 16 ft (4.9 m) MAXIMUM BETWEEN SPRINKLERS

B. 6 ft (1.8 m) MINIMUM BETWEEN SPRINKLERS (DOES NOT APPLY TO SPRINKLERS ADDED TO PROTECT CPVC PIPING OFFSET OVER AN OBSTRUCTION)

C. 256 ft^2 (23.8 m^2) MAXIMUM COVERAGE AREA PER SPRINKLER

HYDRAULIC DESIGN AREA REQUIREMENTS

A. WET SYSTEM: WHERE DRAFT CURTAINS (OR FULL HEIGHT WALLS) ARE PROVIDED AT MAXIMUM AREAS OF 1000 ft^2 (93 m^2) OR LESS, CALCULATE ALL SPRINKLERS WITHIN THE COMPARTMENTED AREA.

B. WET SYSTEM: WHERE DRAFT CURTAINS (OR FULL HEIGHT WALLS) ARE NOT PROVIDED, OR PROVIDED AT AREAS EXCEEDING 1000 ft^2 (93 m^2), CALCULATE AN AREA OF 1000 ft^2 (93 m^2) OR SIX SPRINKLERS, WHICHEVER CREATES THE GREATER DEMAND.

C. ADDITIONAL SPRINKLERS THAT ARE REQUIRED FOR PROTECTION OF CPVC PIPING THAT IS OFFSET OVER AN OBSTRUCTION DO NOT NEED TO BE INCLUDED IN THE DESIGN AREA.

FIELD SET TFM# 21689-A, 21689-B, 21689-C PROJECT# 2025-11-03-04

THESE PLANS AND SPECIFICATIONS ARE REQUIRED TO BE KEPT ON THE JOB SITE UNTIL A FINAL CERTIFICATE OF OCCUPANCY OR PROJECT COMPLETION FORM IS ISSUED BY THIS OFFICE.
TENNESSEE STATE FIRE MARSHAL'S OFFICE

Draft Curtains: Not Required (See Hydraulic Design notes below)

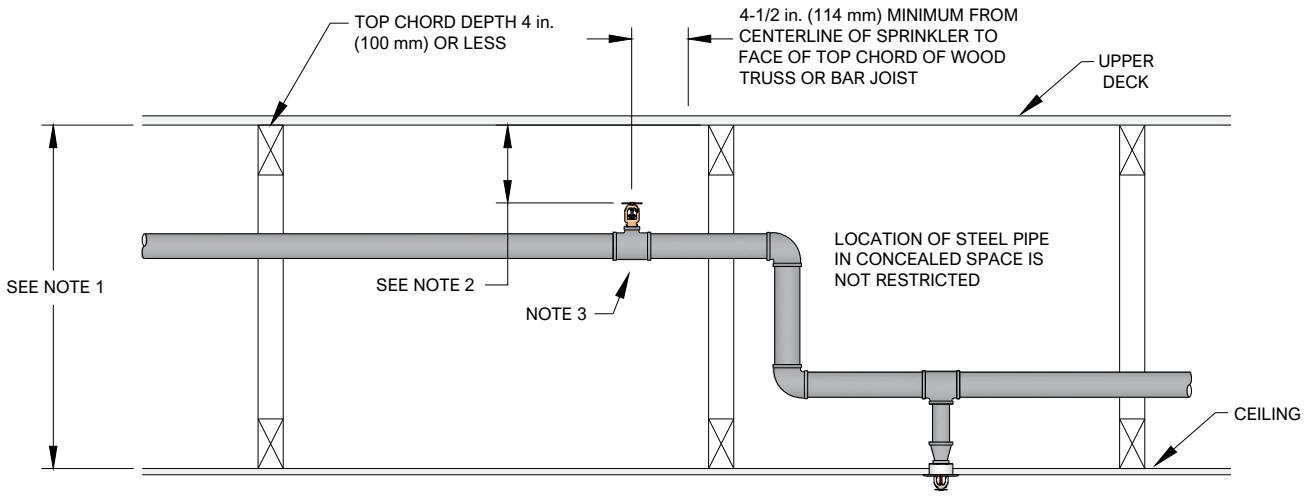

INSTALLATION NOTES:

1. DISTANCE EVALUATED AS PART OF THE cULus LISTING: 12 in. TO 60 in. (300 mm TO 900 mm). NFPA 13 PERMITS INSTALLATION OF THE SPRINKLER WHERE THIS DISTANCE IS LESS THAN 12 in. (300 mm).
2. DEFLECTOR DISTANCE TO BE NO MORE THAN 2 in. (50 mm) BELOW BOTTOM OF THE TOP TRUSS CHORD. IN NO CASE SHALL DEFLECTOR BE ABOVE THE BOTTOM OF THE TOP TRUSS CHORD.
3. INSTALL SPRINKLER WITH FRAME ARMS PARALLEL TO PIPE.

SPRINKLER SPACING AND COVERAGE AREA

A. 16 ft (4.9 m) MAXIMUM BETWEEN SPRINKLERS

B. 6 ft (1.8 m) MINIMUM BETWEEN SPRINKLERS

C. 256 ft^2 (23.8 m^2) MAXIMUM COVERAGE AREA PER SPRINKLER

HYDRAULIC DESIGN AREA REQUIREMENTS

1. WET OR DRY SYSTEM: WHERE DRAFT CURTAINS (OR FULL HEIGHT WALLS) ARE PROVIDED AT MAXIMUM AREAS OF 1000 ft^2 (93 m^2) OR LESS, CALCULATE ALL SPRINKLERS WITHIN THE COMPARTMENTED AREA.
2. WET SYSTEM: WHERE DRAFT CURTAINS OR FULL HEIGHT WALLS ARE NOT PROVIDED, OR PROVIDED AT AREAS EXCEEDING 1000 ft^2 (93 m^2), CALCULATE AN AREA OF 1000 ft^2 (93 m^2) OR SIX SPRINKLERS, WHICHEVER CREATES THE GREATER DEMAND.
3. DRY SYSTEM: WHERE DRAFT CURTAINS OR FULL HEIGHT WALLS ARE NOT PROVIDED, OR PROVIDED AT AREAS EXCEEDING 1000 ft^2 (93 M^2), CALCULATE AN AREA OF 1000 ft^2 (93 m^2) OR NINE SPRINKLERS, WHICHEVER CREATES THE GREATER DEMAND.

FIELD SET TFM# 21689-A, 21689-B, 21689-C PROJECT# 2025-11-03-04

THESE PLANS AND SPECIFICATIONS ARE REQUIRED TO BE KEPT ON THE JOB SITE UNTIL A FINAL CERTIFICATE OF OCCUPANCY OR PROJECT COMPLETION FORM IS ISSUED BY THIS OFFICE.
Any additions, deletions, additions or modifications of any kind are allowed to this approval, except without written permission of this office.
TENNESSEE STATE FIRE MARSHAL'S OFFICE

Draft Curtain and Blocking: Required at 1000 ft^2 (93 m^2)

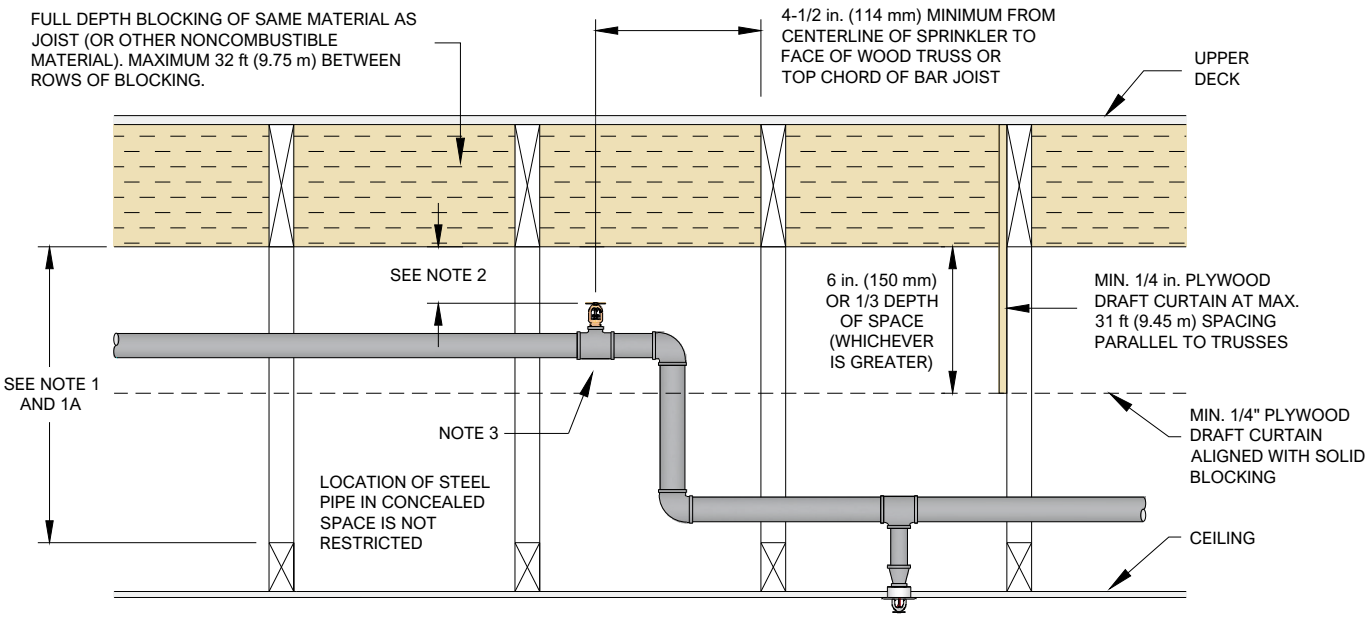

INSTALLATION NOTES:

1. DISTANCE EVALUATED AS PART OF THE cULus LISTING: 12 in. TO 60 in. (300 mm TO 1500 mm). NFPA 13 PERMITS INSTALLATION OF THE SPRINKLER WHERE THIS DISTANCE IS LESS THAN 12 in. (300 mm).

1A. WHERE CEILING IS NOT SUPPORTED BY JOISTS (EXAMPLE: SUSPENDED A.C.T.) MEASUREMENT POINT IS TOP OF CEILING.

2. DEFLECTOR DISTANCE BELOW BOTTOM OF JOIST TO BE 1-1/2 in. TO 2 in. (38 mm TO 50 mm). IN NO CASE SHALL DEFLECTOR BE ABOVE THE BOTTOM OF THE JOIST.

3. INSTALL SPRINKLER WITH FRAME ARMS PARALLEL TO PIPE.

SPRINKLER SPACING AND COVERAGE AREA

A. 14 ft (4.3 m) MAXIMUM BETWEEN SPRINKLERS

B. 6 ft (1.8 m) MINIMUM BETWEEN SPRINKLERS

C. 196 ft^2 (18.2 m^2) MAXIMUM COVERAGE AREA PER SPRINKLER

HYDRAULIC DESIGN AREA REQUIREMENTS

1. WET OR DRY SYSTEM: BLOCKING AND DRAFT CURTAINS (OR FULL HEIGHT WALLS) MUST BE PROVIDED AT 1000 ft^2 (93 m^2) MAXIMUM AREAS. CALCULATE ALL SPRINKLERS WITHIN THE COMPARTMENTED AREA.

FIELD SET TFM# 21689-A, 21689-B, 21689-C PROJECT# 2025-11-03-04

THESE PLANS AND SPECIFICATIONS ARE REQUIRED TO BE KEPT ON THE JOB SITE UNTIL A FINAL CERTIFICATE OF OCCUPANCY OR PROJECT COMPLETION FORM IS ISSUED BY THIS OFFICE.
Any alterations, deletions, additions or modifications of any kind are allowed to this approved set without written permission of the Office.
TENNESSEE STATE FIRE MARSHAL'S OFFICE

Draft Curtains: Not Required (See Hydraulic notes below)

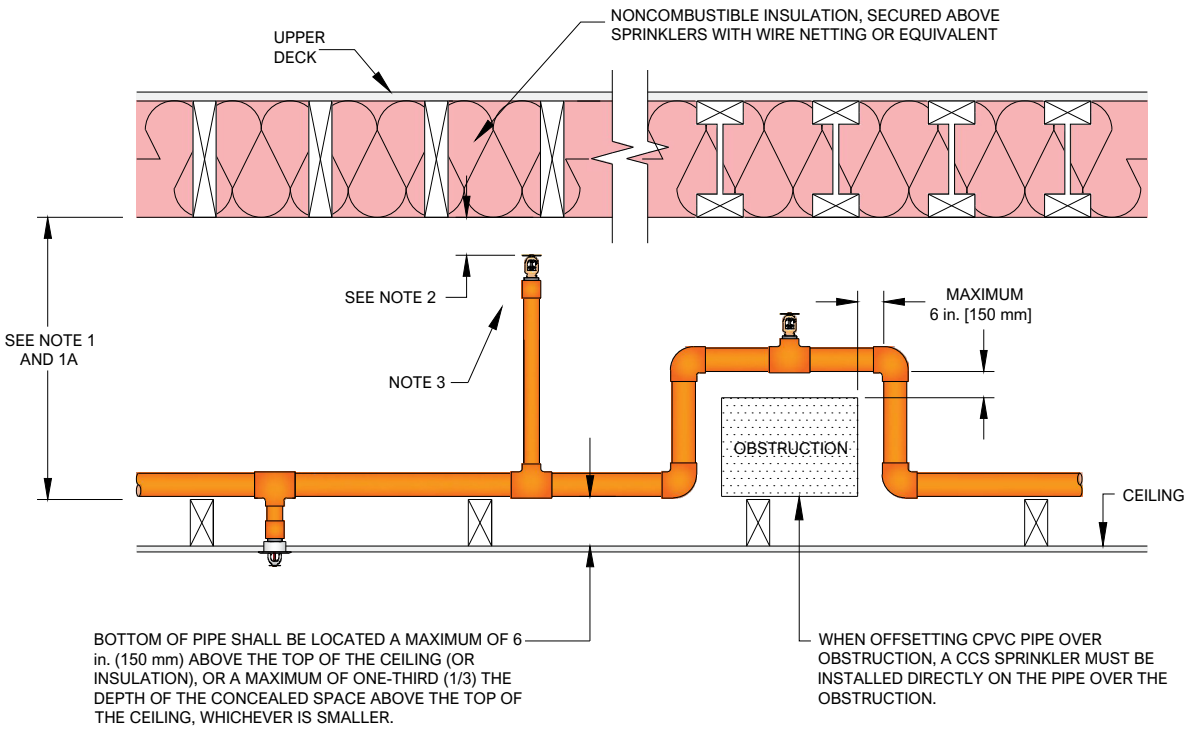

INSTALLATION NOTES:

1. DISTANCE EVALUATED AS PART OF THE cULus LISTING: 12 in. TO 60 in. (300 mm TO 1525 mm). NFPA 13 PERMITS INSTALLATION OF THE SPRINKLER WHERE THIS DISTANCE IS LESS THAN 12 in. (300 mm).

1A. WHERE CEILING IS NOT SUPPORTED BY JOISTS (EXAMPLE: SUSPENDED A.C.T.) MEASUREMENT POINT IS TOP OF CEILING.

2. DEFLECTOR DISTANCE BELOW BOTTOM OF JOIST TO BE 1-1/2 in. TO 4 in. (38 mm TO 100 mm). IN NO CASE SHALL DEFLECTOR BE ABOVE THE BOTTOM OF THE SOLID OR COMPOSITE WOOD JOIST.

3. INSTALL SPRINKLER WITH FRAME ARMS PARALLEL TO PIPE.

SPRINKLER SPACING AND COVERAGE AREA

A. 16 ft (4.9 m) MAXIMUM BETWEEN SPRINKLERS

B. 6 ft (1.8 m) MINIMUM BETWEEN SPRINKLERS

C. 256 ft^2 (23.4 m^2) MAXIMUM COVERAGE AREA PER SPRINKLER

HYDRAULIC DESIGN AREA REQUIREMENTS

A. WET SYSTEM: WHERE DRAFT CURTAINS (OR FULL HEIGHT WALLS) ARE PROVIDED AT MAXIMUM AREAS OF 1000 ft^2 (93 m^2) OR LESS, CALCULATE ALL SPRINKLERS WITHIN THE COMPARTMENTED AREA.

B. WET SYSTEM: WHERE DRAFT CURTAINS (OR FULL HEIGHT WALLS) ARE NOT PROVIDED, OR PROVIDED AT AREAS EXCEEDING 1000 ft^2 (93 m^2), CALCULATE AN AREA OF 1000 ft^2 (93 m^2) OR SIX SPRINKLERS, WHICHEVER CREATES THE GREATER DEMAND.

C. ADDITIONAL SPRINKLERS THAT ARE REQUIRED FOR PROTECTION OF CPVC PIPING THAT IS OFFSET OVER AN OBSTRUCTION DO NOT NEED TO BE INCLUDED IN THE DESIGN AREA.

FIELD SET TFM# 21689-A, 21689-B, 21689-C PROJECT# 2025-11-03-04

THESE PLANS AND SPECIFICATIONS ARE REQUIRED TO BE KEPT ON THE JOB SITE UNTIL A FINAL CERTIFICATE OF OCCUPANCY OR PROJECT COMPLETION FORM IS ISSUED BY THIS OFFICE. ... TENNESSEE STATE FIRE MARSHAL'S OFFICE

Draft Curtain and Blocking: Required at 1000 ft^2 (93 m^2)

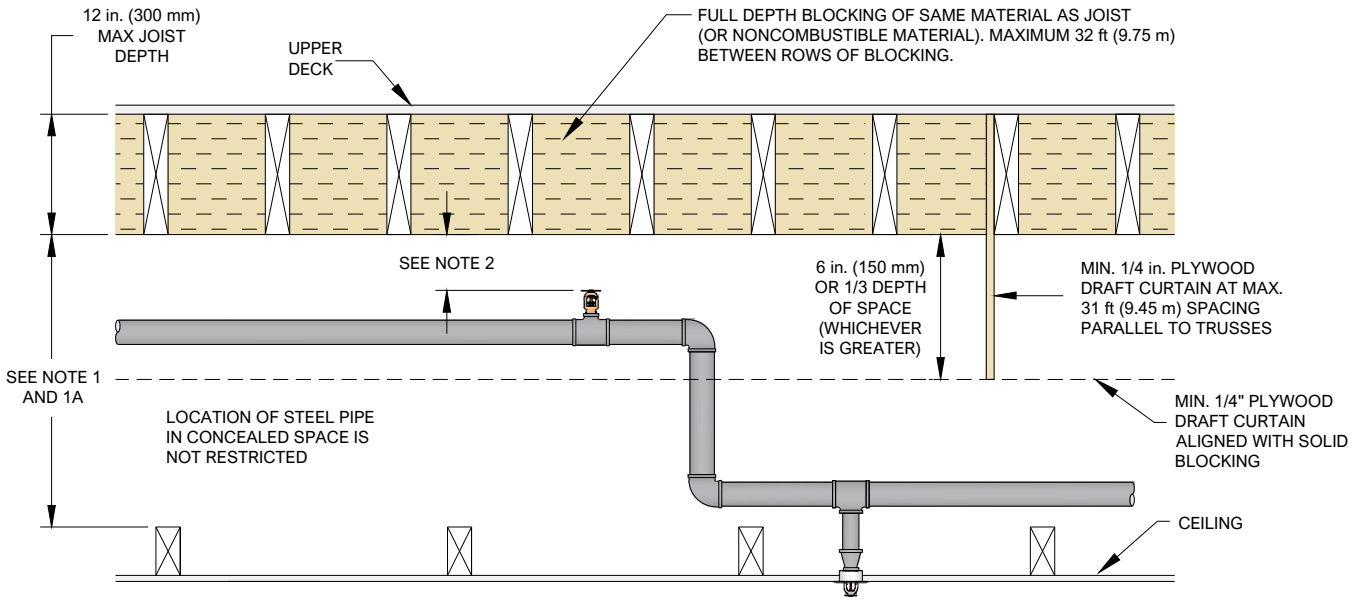

INSTALLATION NOTES:

1. DISTANCE EVALUATED AS PART OF THE cULus LISTING: 12 in. TO 36 in. (300 mm TO 900 mm). NFPA 13 PERMITS INSTALLATION OF THE SPRINKLER WHERE THIS DISTANCE IS LESS THAN 12 in. (300 mm).

1A. WHERE CEILING IS NOT SUPPORTED BY JOISTS (EXAMPLE: SUSPENDED A.C.T.) MEASUREMENT POINT IS TOP OF CEILING.

2. DEFLECTOR DISTANCE BELOW BOTTOM OF JOIST TO BE 1-1/2 in. TO 2 in. (38 mm TO 50 mm). IN NO CASE SHALL DEFLECTOR BE ABOVE THE BOTTOM OF THE SOLID OR COMPOSITE WOOD JOIST.

3. INSTALL SPRINKLER WITH FRAME ARMS PARALLEL TO PIPE.

SPRINKLER SPACING AND COVERAGE AREA

A. 14 ft (4.3 m) MAXIMUM BETWEEN SPRINKLERS

B. 6 ft (1.8 m) MINIMUM BETWEEN SPRINKLERS

C. 196 ft^2 (18.2 m^2) MAXIMUM COVERAGE AREA PER SPRINKLER

HYDRAULIC DESIGN AREA REQUIREMENTS

1. WET OR DRY SYSTEM: BLOCKING AND DRAFT CURTAINS (OR FULL HEIGHT WALLS) MUST BE PROVIDED AT 1000 ft^2 (93 m^2) MAXIMUM AREAS. CALCULATE ALL SPRINKLERS WITHIN THE COMPARTMENTED AREA.

FIELD SET TFM# 21689-A, 21689-B, 21689-C PROJECT# 2025-11-03-04

THESE PLANS AND SPECIFICATIONS ARE REQUIRED TO BE KEPT ON THE JOB SITE UNTIL A FINAL CERTIFICATE OF OCCUPANCY OR PROJECT COMPLETION FORM IS ISSUED BY THIS OFFICE.
Alterations, deletions, additions or modifications of any kind are allowed to this approval without written permission of this office.
TENNESSEE STATE FIRE MARSHAL'S OFFICE

Draft Curtain and Blocking: Not Required

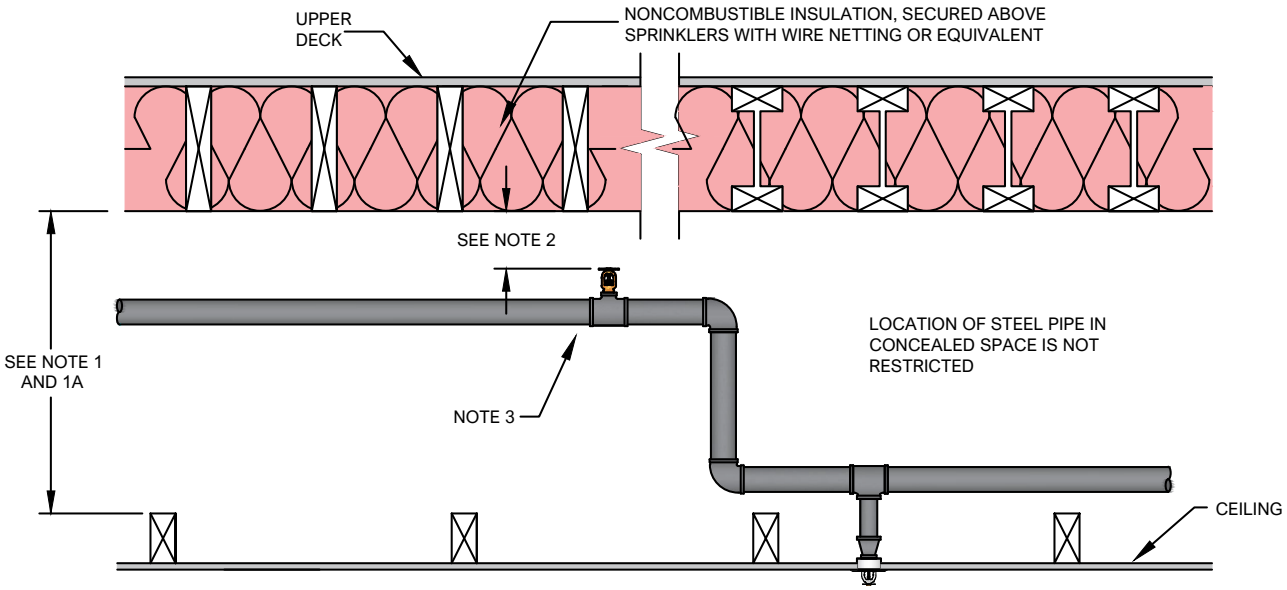

INSTALLATION NOTES:

1. DISTANCE EVALUATED AS PART OF THE cULus LISTING: 12 in. TO 60 in. (300 mm TO 1525 mm). NFPA 13 PERMITS INSTALLATION OF THE SPRINKLER WHERE THIS DISTANCE IS LESS THAN 12 in. (300 mm).

1A. WHERE CEILING IS NOT SUPPORTED BY JOISTS (EXAMPLE: SUSPENDED A.C.T.) MEASUREMENT POINT IS TOP OF CEILING.

2. DEFLECTOR DISTANCE BELOW BOTTOM OF JOIST TO BE 1-1/2 in. TO 4 in. (38 mm TO 100 mm). IN NO CASE SHALL DEFLECTOR BE ABOVE THE BOTTOM OF THE SOLID OR COMPOSITE WOOD JOIST.

3. INSTALL SPRINKLER WITH FRAME ARMS PARALLEL TO PIPE.

SPRINKLER SPACING AND COVERAGE AREA

A. 16 ft (4.9 m) MAXIMUM BETWEEN SPRINKLERS

B. 6 ft (1.8 m) MINIMUM BETWEEN SPRINKLERS

C. 256 ft^2 (23.4 m^2) MAXIMUM COVERAGE AREA PER SPRINKLER

HYDRAULIC DESIGN AREA REQUIREMENTS

1. CALCULATE IN ACCORDANCE WITH NFPA 13 FOR LIGHT HAZARD, INCLUDING REMOTE AREA REDUCTION FOR THE USE OF QUICK RESPONSE SPRINKLERS ON WET SYSTEMS AND REMOTE AREA INCREASE FOR DRY SYSTEMS, WHERE APPLICABLE.

FIELD SET TFM# 21689-A, 21689-B, 21689-C PROJECT# 2025-11-03-04

THESE PLANS AND SPECIFICATIONS ARE REQUIRED TO BE KEPT ON THE JOB SITE UNTIL A FINAL CERTIFICATE OF OCCUPANCY OR PROJECT COMPLETION FORM IS ISSUED BY THIS OFFICE.
TENNESSEE STATE FIRE MARSHAL'S OFFICE

CPVC Piping Installed as a Vertical Riser

Figure 8

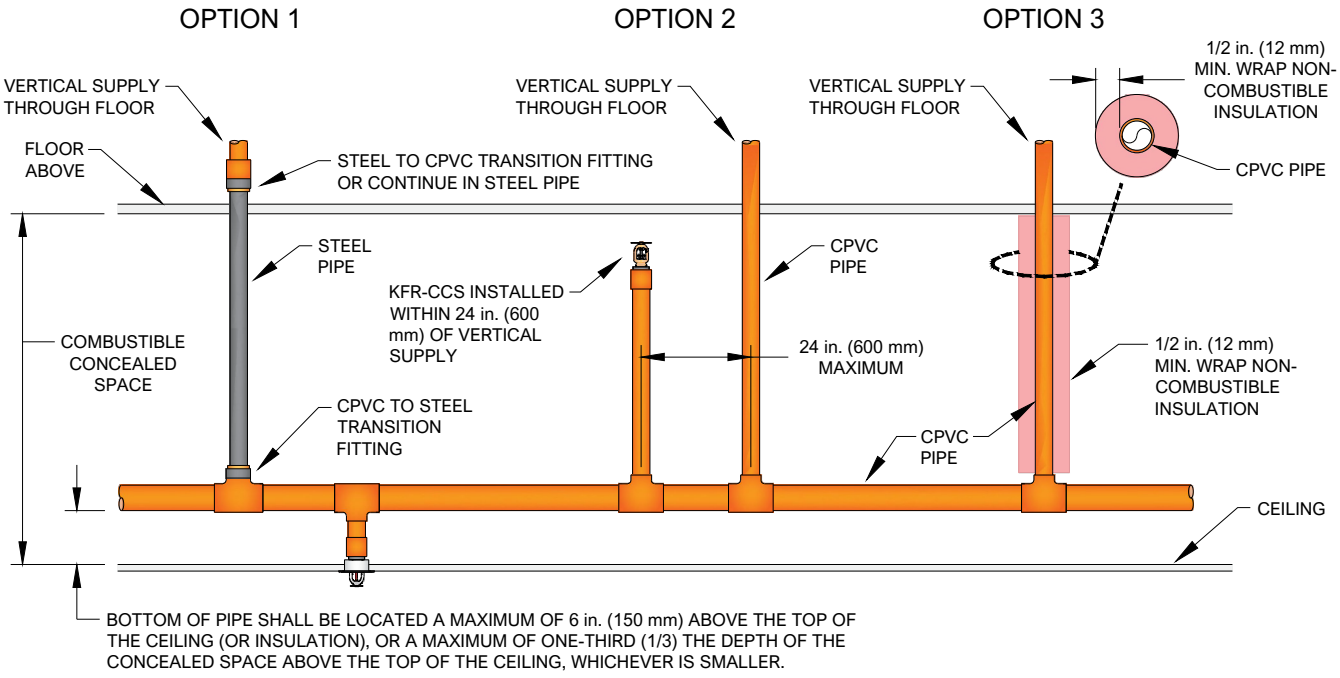

FIELD SET TFM# 21689-A, 21689-B, 21689-C PROJECT# 2025-11-03-04

P/N 9999970449

THESE PLANS AND SPECIFICATIONS ARE REQUIRED TO BE KEPT ON THE JOB SITE UNTIL A FINAL CERTIFICATE OF OCCUPANCY OR PROJECT COMPLETION FORM IS ISSUED BY THIS OFFICE.
TENNESSEE STATE FIRE MARSHAL'S OFFICE

Reliable®

Model F1Res Series Glass Bulb Residential Sprinklers

cULus Listed

Features

- cULus Listed Residential Sprinklers
- Available in pendent and horizontal sidewall orientations
- Decorative finishes available, including recessed escutcheons and conical concealed cover plates

Important! Reliable fire sprinklers must be handled, stored, and installed in accordance with the guidelines in Caution Sheet 310 and this bulletin. Failure to follow these instructions may result in unintended operation or nonoperation of the fire protection system.

Product Description

Model F1Res Series sprinklers are residential sprinklers with a 3 mm glass bulb operating element. A variety of K-Factors as well as recessed and conical concealed options are available as detailed in this Bulletin.

The F1Res Series sprinklers are specially engineered for fast thermal response to meet the requirements of UL 1626. They are intended for installation in accordance with NFPA 13, 13R, and 13D.

Model F1Res Series sprinklers are listed for use in wet systems only.



Application

Model F1Res Series sprinklers cULus Listed Residential sprinklers are intended for use in in residential occupancies and residential portions of any occupancy in accordance with NFPA Standards 13, 13D, or 13R.

For NFPA 13R and NFPA 13D applications, the design flow and pressure shall not be less than the minimum flow and pressure specified in the Listed Design Criteria tables in this Bulletin.

For NFPA 13 applications, the design density shall be a minimum of 0.1 gpm/sf (4.1 mm/min) over the actual coverage area, but in no case shall the flow and pressure be less than the minimum flow and pressure specified in the Listed Design Criteria tables in this bulletin.

Residential Sprinkler Summary **Table A**

Sprinkler Model	Sprinkler Identification Number (SIN)	Orientation	K-Factor gpm/psi$^{1/2}$ (lpm/bar$^{1/2}$)	Thread Size NPT or ISO7-1	Installation Options	Max. Coverage Area ft x ft (m x m)
F1Res30	R3511	Pendent	3.0 (43)	1/2	Pendent or Recessed	16 x16 (4.9 x 4.9)
F1Res49	R3516	Pendent	4.9 (71)	1/2	Pendent or Recessed	20 x 20 (6.1 x 6.1)
F1Res58	R3513	Pendent	5.8 (84)	1/2	Pendent or Recessed	20 x 20 (6.1 x 6.1)
F1Res76	R7618	Pendent	7.6 (109)	3/4	Pendent or Recessed	20 x 20 (6.1 x 6.1)
F1Res30 CCP	R3511	Pendent	3.0 (43)	1/2	Conical Concealed	14 x 14 (4.3 x 4.3)
F1Res49 CCP	R3516	Pendent	4.9 (71)	1/2	Conical Concealed	20 x 20 (6.1 x 6.1)
F1Res58 CCP	R3513	Pendent	5.8 (84)	1/2	Conical Concealed	20 x 20 (6.1 x 6.1)
F1Res76 CCP	R7618	Pendent	7.6 (109)	3/4	Conical Concealed	20 x 20 (6.1 x 6.1)
F1Res44 HSW	R3531	Horizontal Sidewall	4.4 (63)	1/2	Recessed	16 x 20 (4.9 x 6.1)
F1Res44 SWC	R3531	Horizontal Sidewall	4.4 (63)	1/2	Conical Concealed	16 x 20 (4.9 x 6.1)
F1Res58 HSW	R3533	Horizontal Sidewall	5.8 (84)	1/2	Recessed	16 x 20 (4.9 x 6.1)
F1Res 58 HSWX	RA3533	Horizontal Sidewall	5.8 (84)	1/2	Recessed	14 x 26 (4.3 x 7.9)

Note: Please note SIN difference between F1Res58 HSW (R3533) and F1Res58 HSWX (RA3533).

FIELD SET TFM# 21689-A, 21689-B, 21689-C PROJECT# 2025-11-03-04

THESE PLANS AND SPECIFICATIONS ARE REQUIRED TO BE KEPT ON THE JOB SITE UNTIL THE FINAL CERTIFICATE OF OCCUPANCY OR CERTIFICATE OF COMPLETION FOR THE PROJECT IS ISSUED BY THIS OFFICE.
No alterations, deletions, additions or modifications of any kind are allowed to this approved set without written permission of this office.
TENNESSEE STATE FIRE MARSHAL'S OFFICE

Model F1Res30 Residential Pendent Sprinkler & Model F2 Escutcheon — SIN R3511

Technical Specifications
- **Style:** Pendent and Recessed Pendent
- **Threads:** 1/2" NPT or ISO7-1R1/2
- **Nominal K-Factor:** 3.0 (43 metric)
- **Max. Working Pressure:** 175 psi (12 bar)

Material Specifications
- **Thermal Sensor:** 3 mm glass bulb
- **Sprinkler Frame:** Brass Alloy
- **Button:** Copper Alloy
- **Sealing Assembly:** Nickel Alloy with PTFE
- **Load Screw:** Bronze Alloy
- **Deflector:** Bronze Alloy

Finishes
(See Table N)

Sensitivity
Fast-response

Temperature Ratings
155°F (68°C)
175°F (79°C)

Recessed Escutcheons
F2 Recessed

Sprinkler Wrenches
Model W2
Model W1 (Recessed)



Model F1Res30 Residential Pendent Sprinkler Components and Installation Dimensions — Figure 1

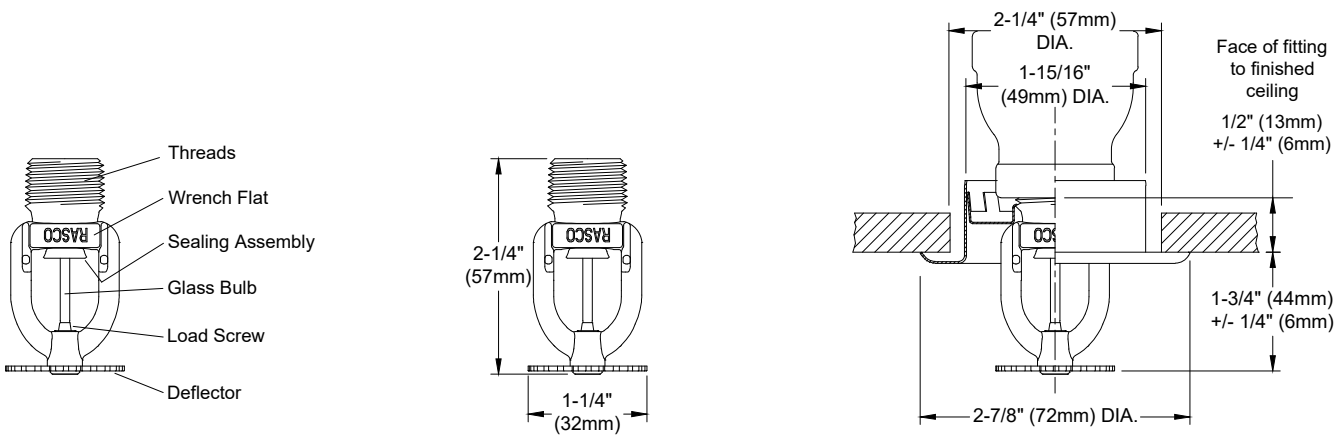

Components — Dimensions — F2 Recessed Escutcheon Installation

Model F1Res30 Residential Pendent Sprinkler Hydraulic Design Criteria — Table B

Minimum Flow and Residual Pressure in Wet Pipe Systems(1)			
Maximum Coverage Area(2) ft. x ft.(m x m)	**Flow gpm (l/min)**	**Pressure psi (bar)**	**Deflector to Ceiling Distance**
12 x 12 (3.7 x 3.7)	8 (30)	7.0 (0.48)	1 to 4 inches (25 to 100 mm)
14 x 14 (4.3 x 4.3)	10 (38)	11.0 (0.76)	
15 x 15 (4.6 x 4.6)	12 (45)	16.0 (1.1)	
16 x 16 (4.9 x 4.9)	13 (49)	18.8 (1.3)	

Notes:
1. For NFPA 13 installations the flow per sprinkler must be the greater of: (1) the flow listed in the table above or (2) the flow required to achieve a minimum design density of 0.1 gpm/sq ft over the design area of the sprinkler.
2. For coverage area dimensions less than those listed above, use the minimum required flow for the next larger maximum coverage area listed.

FIELD SET TFM# 21689-A, 21689-B, 21689-C PROJECT# 2025-11-03-04

THESE PLANS AND SPECIFICATIONS ARE REQUIRED TO BE KEPT ON THE JOB SITE UNTIL A FINAL CERTIFICATE OF OCCUPANCY OR PROJECT COMPLETION FORM IS ISSUED BY THIS OFFICE.
No alterations, deletions, additions or modifications of any kind are allowed to this approval without written permission of this office.
TENNESSEE STATE FIRE MARSHAL'S OFFICE

Model F1Res49 Residential Sprinkler & Models F1 & F2 Escutcheons — SIN R3516

Technical Specifications
- **Style:** Pendent and Recessed Pendent
- **Threads:** 1/2" NPT or ISO7-1R1/2
- **Nominal K-Factor:** 4.9 (71 metric)
- **Max. Working Pressure:** 175 psi (12 bar)

Material Specifications
- **Thermal Sensor:** 3 mm glass-bulb
- **Sprinkler Frame:** Brass Alloy
- **Button:** Copper Alloy
- **Sealing Assembly:** Nickel Alloy with PTFE
- **Load Screw:** Bronze Alloy
- **Deflector:** Bronze Alloy

Finishes
(See Table N)

Sensitivity
Fast-response

Temperature Ratings
155°F (68°C)
175°F (79°C)

Recessed Escutcheons
F1 Recessed
F2 Recessed

Sprinkler Wrenches
Model W2
Model W1 (Recessed)



Model F1Res49 Residential Pendent Sprinkler Components and Installation Dimensions — Figure 2

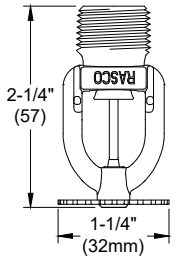

Dimensions

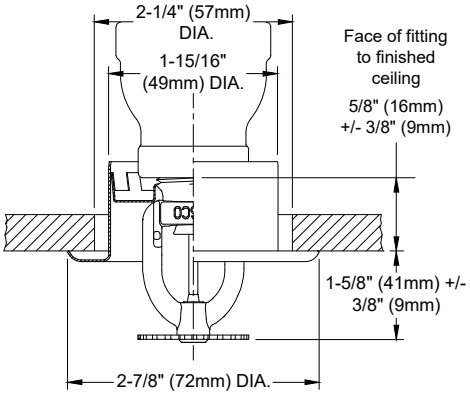

F1 Recessed Escutcheon Installation

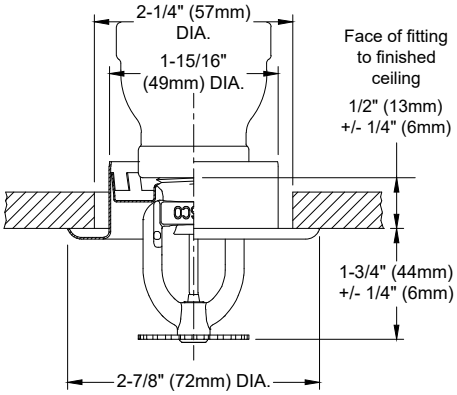

F2 Recessed Escutcheon Installation

Model F1Res49 Residential Pendent Sprinkler Hydraulic Design Criteria — Table C

Minimum Flow and Residual Pressure in Wet Pipe Systems[1]			
Maximum Coverage Area[2] ft. x ft. (m x m)	**Flow gpm (l/min)**	**Pressure psi (bar)**	**Deflector to Ceiling Distance**
12 x 12 (3.7 x 3.7)	13 (49)	7.0 (0.48)	1 to 4 inches (25 to 100 mm)
14 x 14 (4.3 x 4.3)	13 (49)	7.0 (0.48)	
16 x 16 (4.9 x 4.9)	13 (49)	7.0 (0.48)	
18 x 18 (5.5 x 5.5)	17 (64)	12.0 (0.83)	
20 x 20 (6.1 x 6.1)	20 (76)	16.7 (1.15)	
12 x 12 (3.7 x 3.7)	15 (57)	9.4 (0.65)	4 to 8 inches (100 to 200 mm)
14 x 14 (4.3 x 4.3)	16 (61)	10.7 (0.74)	
16 x 16 (4.9 x 4.9)	17 (64)	12.0 (0.83)	
18 x 18 (5.5 x 5.5)	19 (72)	15.0 (1.03)	
20 x 20 (6.1 x 6.1)	22 (83)	20.2 (1.39)	

Notes:
1. For NFPA 13 installations the flow per sprinkler must be the greater of: (1) the flow listed in the table above or (2) the flow required to achieve a minimum design density of 0.1 gpm/sq ft over the design area of the sprinkler.
2. For coverage area dimensions less than those listed above, use the minimum required flow for the next larger maximum coverage area listed.

FIELD SET TFM# 21689-A, 21689-B, 21689-C PROJECT# 2025-11-03-04

TENNESSEE STATE FIRE MARSHAL'S OFFICE

Model F1Res58 Residential Pendent Sprinkler & F1 & F2 Recessed Escutcheons — SIN R3513

Technical Specifications
Style: Pendent and Recessed Pendent
Threads: 1/2" NPT or ISO7-1R1/2
Nominal K-Factor: 5.8 (84 metric)
Max. Working Pressure: 175 psi (12 bar)

Material Specifications
Thermal Sensor: 3 mm glass bulb
Sprinkler Frame: Brass Alloy
Button: Copper Alloy
Sealing Assembly: Nickel Alloy with PTFE
Load Screw: Bronze Alloy
Deflector: Bronze Alloy

Finishes
(See Table N)
Sensitivity
Fast-response
Temperature Ratings
155°F (68°C)
175°F (79°C)
Recessed Escutcheons
F1 Recessed
F2 Recessed
Sprinkler Wrenches
Model W2
Model W1 (Recessed)



Model F1Res58 Residential Pendent Sprinkler Components and Installation Dimensions — Figure 3

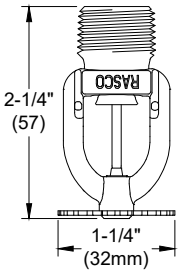

Dimensions

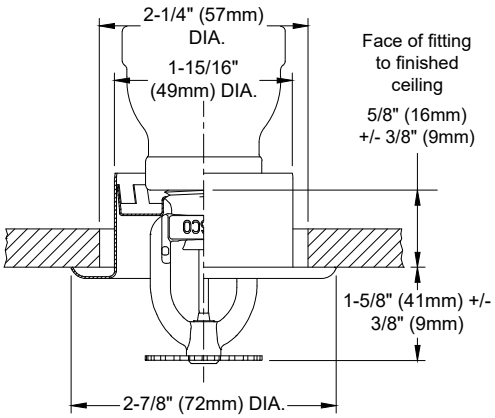

F1 Recessed Escutcheon Installation

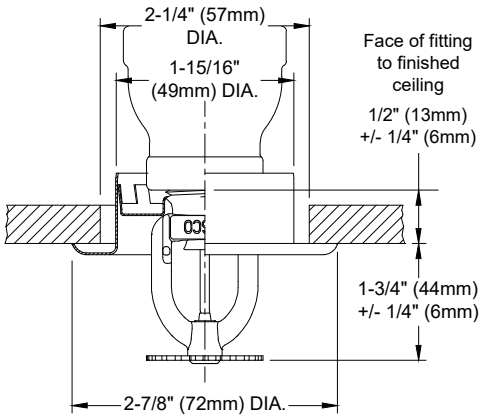

F2 Recessed Escutcheon Installation

Model F1Res58 Residential Pendent Sprinkler Hydraulic Design Criteria — Table D

Minimum Flow and Residual Pressure in Wet Pipe Systems[1]			
Maximum Coverage Area[2] ft. x ft. (m x m)	**Flow gpm (l/min)**	**Pressure psi (bar)**	**Deflector to Ceiling Distance**
16 x 16 (4.9 x 4.9)	16 (61)	7.6 (0.52)	1 to 4 inches (25 to 100 mm)
18 x 18 (5.5 x 5.5)	19 (72)	10.8 (0.75)	
20 x 20 (6.1 x 6.1)	22 (83)	14.4 (1.0)	

Notes:
1. For NFPA 13 installations the flow per sprinkler must be the greater of: (1) the flow listed in the table above or (2) the flow required to achieve a minimum design density of 0.1 gpm/sq ft over the design area of the sprinkler.
2. For coverage area dimensions less than those listed above, use the minimum required flow for the next larger maximum coverage area listed.

FIELD SET TFM# 21689-A, 21689-B, 21689-C PROJECT# 2025-11-03-04

THESE PLANS AND SPECIFICATIONS ARE REQUIRED TO BE KEPT ON THE JOB SITE UNTIL A FINAL CERTIFICATE OF OCCUPANCY OR PROJECT COMPLETION FORM IS ISSUED BY THIS OFFICE.
TENNESSEE STATE FIRE MARSHAL'S OFFICE

Model F1Res76 Residential Pendent Sprinkler & F1 & F2 Escutcheons — SIN R7618

Technical Specifications
Style: Pendent and Recessed Pendent
Threads: 3/4" NPT or ISO7-1R3/4
Nominal K-Factor: 7.6 (109 metric)
Max. Working Pressure: 175 psi (12 bar)

Material Specifications
Thermal Sensor: 3 mm glass bulb
Sprinkler Frame: Brass Alloy
Button: Copper Alloy
Sealing Assembly: Nickel Alloy with PTFE
Load Screw: Bronze Alloy
Deflector: Bronze Alloy

Finishes
(See Table N)
Sensitivity
Fast-response
Temperature Ratings
155°F (68°C)
175°F (79°C)
Recessed Escutcheons
F1 Recessed
F2 Recessed
Sprinkler Wrenches
Model W2
Model W1 (Recessed)



Model F1Res76 Residential Pendent Sprinkler Components and Installation Dimensions — Figure 4

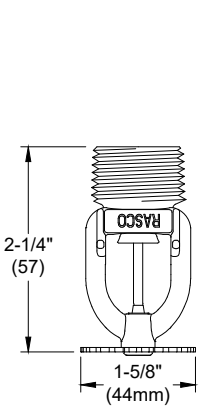

Dimensions

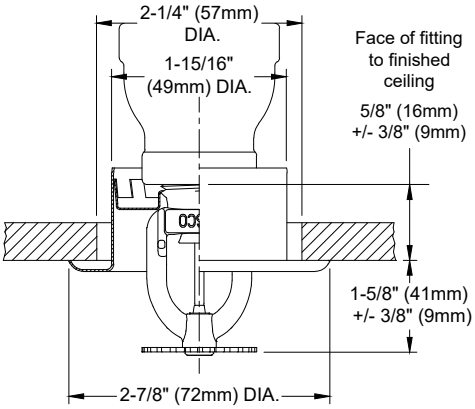

F1 Recessed Escutcheon Installation

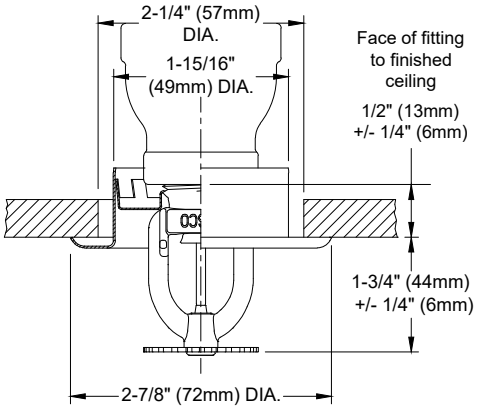

F2 Recessed Escutcheon Installation

Model F1Res76 Residential Pendent Sprinkler Hydraulic Design Criteria — Table E

Minimum Flow and Residual Pressure in Wet Pipe Systems[1]			
Maximum Coverage Area[2] ft. x ft. (m x m)	**Flow gpm (l/min)**	**Pressure psi (bar)**	**Deflector to Ceiling Distance**
18 x 18 (5.5 x 5.5)	21 (80)	7.6 (0.52)	1 to 4 inches (25 to 100 mm)
20 x 20 (6.1 x 6.1)	23 (87)	9.2 (0.63)	

Notes:
1. For NFPA 13 installations the flow per sprinkler must be the greater of: (1) the flow listed in the table above or (2) the flow required to achieve a minimum design density of 0.1 gpm/sq ft over the design area of the sprinkler.
2. For coverage area dimensions less than those listed above, use the minimum required flow for the next larger maximum coverage area listed.

FIELD SET TFM# 21689-A, 21689-B, 21689-C PROJECT# 2025-11-03-04

THESE PLANS AND SPECIFICATIONS ARE REQUIRED TO BE KEPT ON THE JOB SITE UNTIL A FINAL CERTIFICATE OF OCCUPANCY OR PROJECT COMPLETION FORM IS ISSUED BY THIS OFFICE.
TENNESSEE STATE FIRE MARSHAL'S OFFICE

Model F1Res30 CCP Conical Concealed Pendent & Model FP Recessed Escutcheon Pendent Sprinkler

SIN R3511

Technical Specifications
Style: Conical Concealed Pendent and Recessed Pendent
Threads: 1/2" NPT or ISO7-1R1/2
Nominal K-Factor: 3.0 (43 metric)
Max. Working Pressure: 175 psi (12 bar)

Material Specifications
Thermal Sensor: 3 mm glass bulb
Sprinkler Frame: Brass Alloy
Button: Copper Alloy
Sealing Assembly: Nickel Alloy with PTFE
Load Screw: Bronze Alloy
Deflector: Bronze Alloy

Finishes
(See Table N)
Sensitivity
Fast-response
Temperature Ratings
155°F (68°C)
Recessed Escutcheons/Cover Plates
CCP Conical Concealed Plate 135°F (57°C)*
FP Recessed*
Sprinkler Wrenches
Model W1



***Note:** Model F1Res sprinklers with Model FP recessed escutcheon or Model CCP cover plate may not be used where the pressure above the ceiling is positive with respect to the protected area. Ensure openings in the sprinkler cup are unobstructed following installation.

Model F1Res30 CCP and FP Recessed Pendent Sprinkler Installation Dimensions

Figure 5

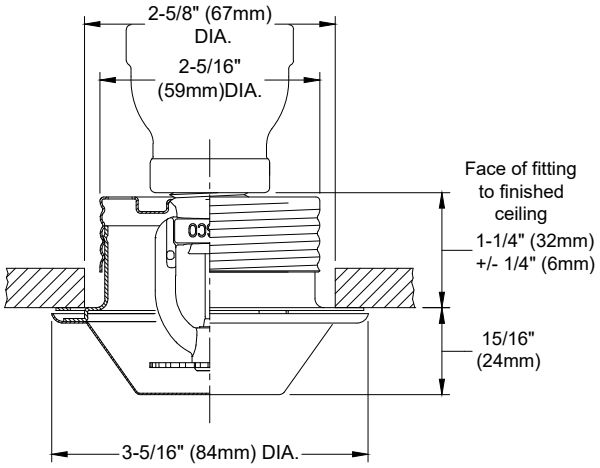

CCP Recessed Escutcheon Installation

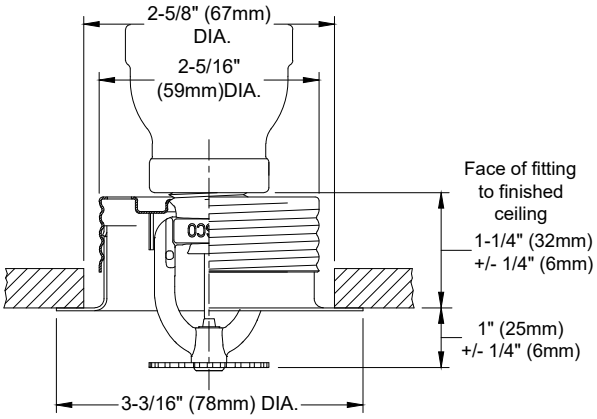

FP Recessed Escutcheon Installation

Model F1Res30 CCP Pendent & FP Recessed Pendent Sprinkler Hydraulic Design Criteria

Table F

Minimum Flow and Residual Pressure in Wet Pipe Systems(1)			
Maximum Coverage Area(2) ft. x ft. (m x m)	**Flow gpm (l/min)**	**Pressure psi (bar)**	**Deflector to Ceiling Distance**
12 x 12 (3.7 x 3.7)	8 (30)	7.0 (0.48)	1/2 to 1 inch (13 to 25 mm)
14 x 14 (4.3 x 4.3)	11 (38)	13.4 (0.92)	

Notes:
1. For NFPA 13 installations the flow per sprinkler must be the greater of: (1) the flow listed in the table above or (2) the flow required to achieve a minimum design density of 0.1 gpm/sq ft over the design area of the sprinkler.
2. For coverage area dimensions less than those listed above, use the minimum required flow for the next larger maximum coverage area listed.
3. The sprinkler must be installed into a ceiling with the listed cover plate installed.

FIELD SET TFM# 21689-A, 21689-B, 21689-C PROJECT# 2025-11-03-04

THESE PLANS AND SPECIFICATIONS ARE REQUIRED TO BE KEPT ON THE JOB SITE UNTIL A FINAL CERTIFICATE OF OCCUPANCY OR PROJECT COMPLETION FORM IS ISSUED BY THIS OFFICE.
No alterations, deletions, additions or modifications of any kind are allowed to this approved plan without written permission of this office.
TENNESSEE STATE FIRE MARSHAL'S OFFICE

Model F1Res49 CCP Conical Concealed Pendent & Model FP Recessed Escutcheon Pendent Sprinkler — SIN R3516

Technical Specifications
Style: Conical Concealed Pendent and Recessed Pendent
Threads: 1/2" NPT or ISO7-1R1/2
Nominal K-Factor: 4.9 (71 metric)
Max. Working Pressure: 175 psi (12 bar)

Material Specifications
Thermal Sensor: 3 mm glass bulb
Sprinkler Frame: Brass Alloy
Button: Copper Alloy
Sealing Assembly: Nickel Alloy with PTFE
Load Screw: Bronze Alloy
Deflector: Bronze Alloy

Finishes
(See Table N)
Sensitivity
Fast-response
Temperature Ratings
155°F (68°C)
Recessed Escutcheons/Cover Plates
CCP Conical Concealed Plate 135°F (57°C)*
FP Recessed*
Sprinkler Wrenches
Model W1



***Note:** Model F1Res sprinklers with Model FP recessed escutcheon or Model CCP cover plate may not be used where the pressure above the ceiling is positive with respect to the protected area. Ensure openings in the sprinkler cup are unobstructed following installation.

Model F1Res49 CCP & FP Recessed Pendent Sprinkler Installation Dimensions — Figure 6

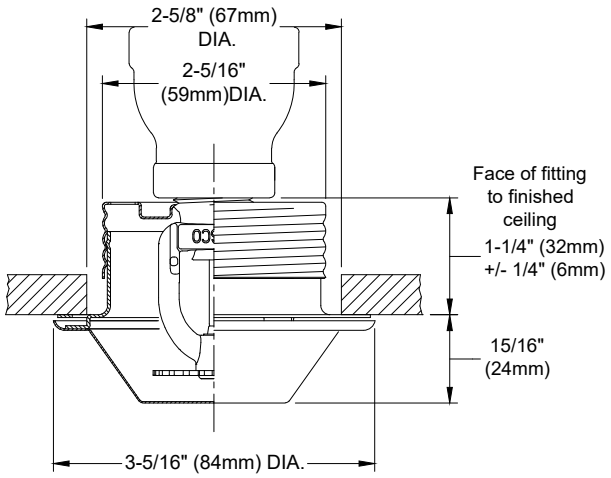

CCP Recessed Escutcheon Installation

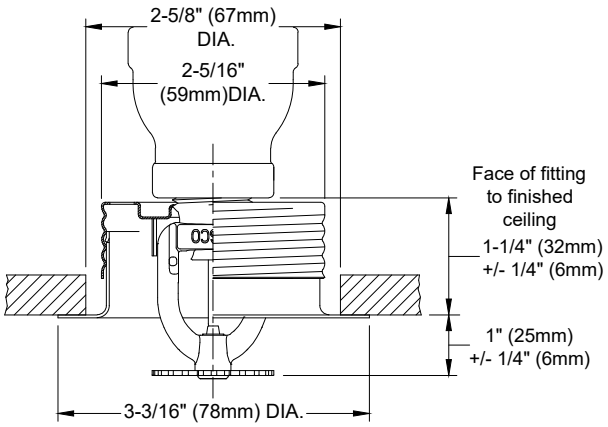

FP Recessed Escutcheon Installation

Model F1Res49 CCP Pendent and FP Recessed Pendent Hydraulic Design Criteria — Table G

Minimum Flow and Residual Pressure in Wet Pipe Systems[1]			
Maximum Coverage Area[2] ft. x ft. (m x m)	**Flow gpm (l/min)**	**Pressure psi (bar)**	**Deflector to Ceiling Distance**
14 x 14 (4.3 x 4.3)	13 (49)	7.0 (0.48)	1/2 to 1 inch (13 to 25 mm)
16 x 16 (4.9 x 4.9)	14 (53)	8.2 (0.57)	
18 x 18 (5.5 x 5.5)	18 (68)	13.5 (0.93)	
20 x 20 (6.1 x 6.1)	20 (76)	16.7 (1.15)	

Notes:
1. For NFPA 13 installations the flow per sprinkler must be the greater of: (1) the flow listed in the table above or (2) the flow required to achieve a minimum design density of 0.1 gpm/sq ft over the design area of the sprinkler.
2. For coverage area dimensions less than those listed above, use the minimum required flow for the next larger maximum coverage area listed.
3. The sprinkler must be installed into a ceiling with the listed cover plate installed.

FIELD SET TFM# 21689-A, 21689-B, 21689-C PROJECT# 2025-11-03-04

THESE PLANS AND SPECIFICATIONS ARE REQUIRED TO BE KEPT ON THE JOB SITE UNTIL A FINAL CERTIFICATE OF OCCUPANCY OR PROJECT COMPLETION FORM IS ISSUED BY THIS OFFICE.
Any revisions, deletions, additions or modifications of any kind are allowed to this approved set of plans without written permission of this office.
TENNESSEE STATE FIRE MARSHAL'S OFFICE

Model F1Res58 CCP Conical Concealed Pendent & Model FP Recessed Escutcheon Pendent Sprinkler — SIN R3513

Technical Specifications
Style: Conical Concealed Pendent and Recessed Pendent
Threads: 1/2" NPT or ISO7-1R1/2
Nominal K-Factor: 5.8 (84 metric)
Max. Working Pressure: 175 psi (12 bar)

Material Specifications
Thermal Sensor: 3 mm glass bulb
Sprinkler Frame: Brass Alloy
Button: Copper Alloy
Sealing Assembly: Nickel Alloy with PTFE
Load Screw: Bronze Alloy
Deflector: Bronze Alloy

Finishes
(See Table N)
Sensitivity
Fast-response
Temperature Ratings
155°F (68°C)
Recessed Escutcheons/Cover Plates
CCP Conical Concealed Plate 135°F (57°C)*
FP Recessed*
Sprinkler Wrenches
Model W1



***Note:** Model F1Res sprinklers with Model FP recessed escutcheon or Model CCP cover plate may not be used where the pressure above the ceiling is positive with respect to the protected area. Ensure openings in the sprinkler cup are unobstructed following installation.

Model F1Res58 CCP and FP Recessed Pendent Sprinkler Installation Dimensions — Figure 7

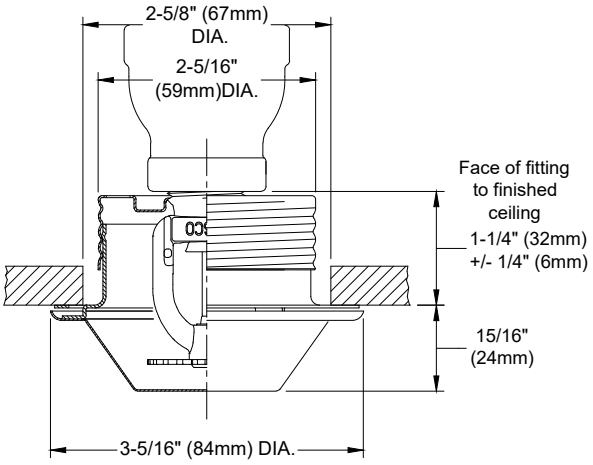

CCP Recessed Escutcheon Installation

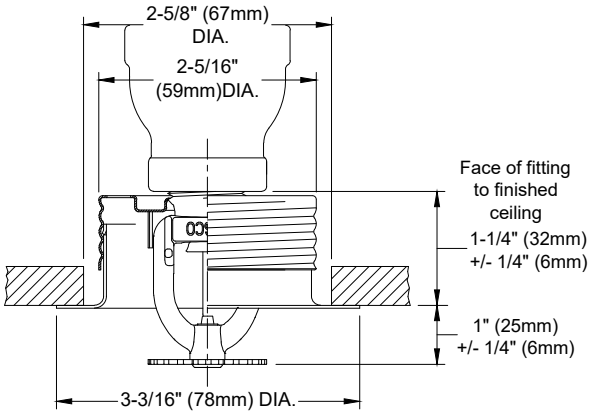

FP Recessed Escutcheon Installation

Model F1Res58 CCP Pendent & FP Recessed Pendent Hydraulic Design Criteria — Table H

Minimum Flow and Residual Pressure in Wet Pipe Systems[1]			
Maximum Coverage Area[2] ft. x ft. (m x m)	**Flow gpm (l/min)**	**Pressure psi (bar)**	**Deflector to Ceiling Distance**
16 x 16 (4.9 x 4.9)	16 (61)	7.6 (0.52)	1/2 to 1 inch (13 to 25 mm)
18 x 18 (5.5 x 5.5)	19 (72)	10.8 (0.75)	
20 x 20 (6.1 x 6.1)	22 (83)	14.4 (1.0)	

Notes:
1. For NFPA 13 installations the flow per sprinkler must be the greater of: (1) the flow listed in the table above or (2) the flow required to achieve a minimum design density of 0.1 gpm/sq ft over the design area of the sprinkler.
2. For coverage area dimensions less than those listed above, use the minimum required flow for the next larger maximum coverage area listed.
3. The sprinkler must be installed into a ceiling with the listed cover plate installed.

FIELD SET TFM# 21689-A, 21689-B, 21689-C PROJECT# 2025-11-03-04

THESE PLANS AND SPECIFICATIONS ARE REQUIRED TO BE KEPT ON THE JOB SITE UNTIL A FINAL CERTIFICATE OF OCCUPANCY OR PROJECT COMPLETION FORM IS ISSUED BY THIS OFFICE.
No additions, deletions, additions or changes of any kind are allowed to this approved plan without written permission of this office.
TENNESSEE STATE FIRE MARSHAL'S OFFICE

Model F1Res76 CCP Conical Concealed Pendent and Model FP Recessed Escutcheon Pendent Sprinkler — SIN R7618

Technical Specifications
- **Style:** Conical Concealed Pendent and Recessed Pendent
- **Threads:** 3/4" NPT or ISO7-1R3/4
- **Nominal K-Factor:** 7.6 (109 metric)
- **Max. Working Pressure:** 175 psi (12 bar)

Material Specifications
- **Thermal Sensor:** 3 mm glass bulb
- **Sprinkler Frame:** Brass Alloy
- **Button:** Copper Alloy
- **Sealing Assembly:** Nickel Alloy with PTFE
- **Load Screw:** Bronze Alloy
- **Deflector:** Bronze Alloy

Finishes
(See Table N)

Sensitivity
Fast-response

Temperature Ratings
155°F (68°C)

Recessed Escutcheons/Cover Plates
CCP Conical Concealed Plate 135°F (57°C)*
FP Recessed*

Sprinkler Wrenches
Model W1



***Note:** Model F1Res sprinklers with Model FP recessed escutcheon or Model CCP cover plate may not be used where the pressure above the ceiling is positive with respect to the protected area. Ensure openings in the sprinkler cup are unobstructed following installation.

Model F1Res76 CCP and FP Recessed Pendent Sprinkler Installation Dimensions — Figure 8

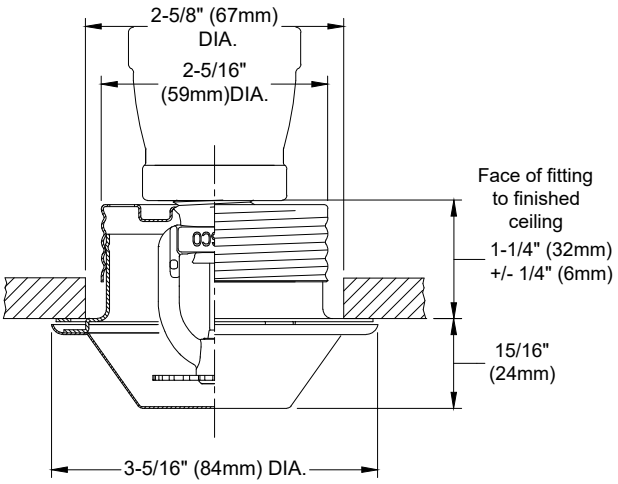

CCP Recessed Escutcheon Installation

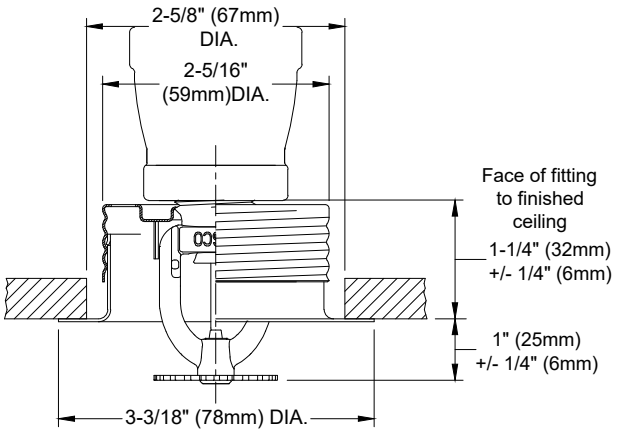

FP Recessed Escutcheon Installation

Model F1Res76 CCP Pendent & FP Recessed Pendent Hydraulic Design Criteria — Table I

Minimum Flow and Residual Pressure in Wet Pipe Systems(1)			
Maximum Coverage Area(2) ft. x ft. (m x m)	**Flow gpm (l/min)**	**Pressure psi (bar)**	**Deflector to Ceiling Distance**
16 x 16 (4.9 x 4.9)	21 (80)	7.6 (0.52)	1/2 to 1 inch (13 to 25 mm)
18 x 18 (5.5 x 5.5)	22 (83)	8.4 (0.58)	
20 x 20 (6.1 x 6.1)	25 (95)	10.8 (0.75)	

Notes:
1. For NFPA 13 installations the flow per sprinkler must be the greater of: (1) the flow listed in the table above or (2) the flow required to achieve a minimum design density of 0.1 gpm/sq ft over the design area of the sprinkler.
2. For coverage area dimensions less than those listed above, use the minimum required flow for the next larger maximum coverage area listed.
3. The sprinkler must be installed into a ceiling with the listed cover plate installed.

FIELD SET TFM# 21689-A, 21689-B, 21689-C PROJECT# 2025-11-03-04

THESE PLANS AND SPECIFICATIONS ARE REQUIRED TO BE KEPT ON THE JOB SITE UNTIL A FINAL CERTIFICATE OF OCCUPANCY OR PROJECT COMPLETION FORM IS ISSUED BY THIS OFFICE.
No alterations, deletions, additions or modifications of any kind are allowed to this approved set without written permission of this office.
TENNESSEE STATE MARSHAL'S OFFICE

Model F1Res44 Horizontal Sidewall Sprinkler & Model F2 Recessed Escutcheon — SIN R3531

Technical Specifications
- **Style:** Sidewall and Recessed Sidewall
- **Threads:** 1/2" NPT or ISO7-1R1/2
- **Nominal K-Factor:** 4.4 (63 metric)
- **Max. Working Pressure:** 175 psi (12 bar)

Material Specifications
- **Thermal Sensor:** 3 mm glass bulb
- **Sprinkler Frame:** Brass Alloy
- **Button:** Copper Alloy
- **Sealing Assembly:** Nickel Alloy with PTFE
- **Load Screw:** Bronze Alloy
- **Deflector:** Bronze Alloy

Finishes
(See Table N)

Sensitivity
Fast-response

Temperature Ratings
155°F (68°C)
175°F (79°C)

Recessed Escutcheons
F2 Recessed

Sprinkler Wrenches
Model W2
Model W1 (Recessed)



Model F1Res44 Horizontal Sidewall Sprinkler Installation Dimensions — Figure 9

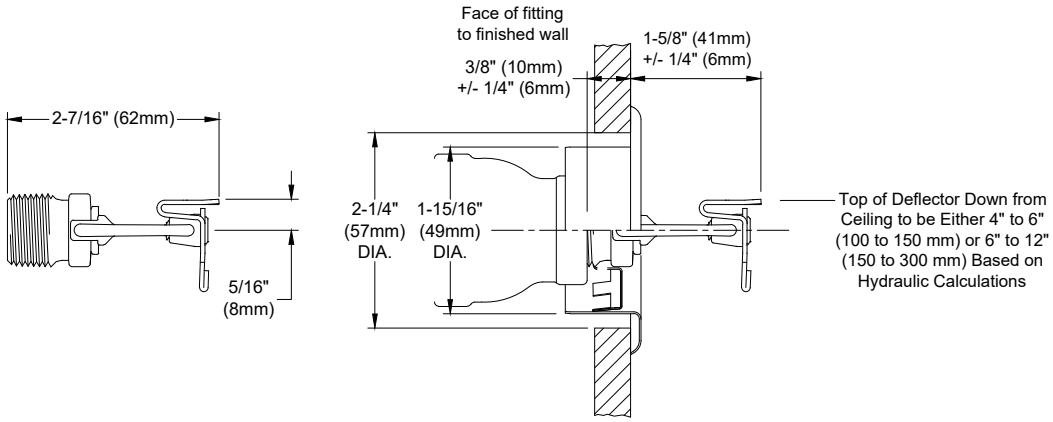

Dimensions — F2 Recessed Escutcheon Installation

Model F1Res44 Horizontal Sidewall Sprinkler Hydraulic Design Criteria — Table J

Minimum Flow and Residual Pressure in Wet Pipe Systems[1]			
Maximum Coverage Area[2] ft. x ft. (m x m)	**Flow gpm (l/min)**	**Pressure psi (bar)**	**Deflector to Ceiling Distance**
12 x 12 (3.7 x 3.7)	12 (45)	7.5 (0.52)	4 to 6 inches (100 to 150 mm)
14 x 14 (4.3 x 4.3)	14 (53)	10.2 (0.70)	
15 x 15 (4.6 x 4.6)	15 (57)	11.6 (0.80)	
16 x 16 (4.9 x 4.9)	16 (61)	13.3 (0.92)	
16 x 18 (4.9 x 5.5)[3]	21 (79)	22.8 (1.57)	
18 x 18 (5.5 x 5.5)[3]	21 (79)	22.8 (1.57)	
16 x 20 (4.9 x 6.1)	23 (87)	27.4 (1.89)	
12 x 12 (3.7 x 3.7)	14 (53)	10.2 (0.7)	6 to 12 inches (150 to 300 mm)
14 x 14 (4.3 x 4.3)	16 (61)	13.2 (0.91)	
15 x 15 (4.6 x 4.6)	16 (61)	13.2 (0.91)	
16 x 16 (4.9 x 4.9)	17 (64)	15.0 (1.03)	
16 x 18 (4.9 x 5.5)[3]	21 (79)	22.8 (1.57)	
16 x 20 (4.9 x 6.1)	23 (87)	27.4 (1.89)	

Notes:
1. For NFPA 13 installations the flow per sprinkler must be the greater of: (1) the flow listed in the table above or (2) the flow required to achieve a minimum design density of 0.1 gpm/sq ft over the design area of the sprinkler.
2. For coverage area dimensions less than those listed above, use the minimum required flow for the next larger maximum coverage area listed.
3. Previous versions of this bulletin specify different minimum flow rates for some spacings for the Model F1Res44 Horizontal Sidewall sprinkler. Please contact Reliable Technical Services for additional information.

FIELD SET TFM# 21689-A, 21689-B, 21689-C PROJECT# 2025-11-03-04

THESE PLANS AND SPECIFICATIONS ARE REQUIRED TO BE KEPT ON THE JOB SITE UNTIL A FINAL CERTIFICATE OF OCCUPANCY OR PROJECT COMPLETION FORM IS ISSUED BY THIS OFFICE. No alterations, deletions, additions or modifications of any kind are allowed to this approved set without written permission of this office. TENNESSEE STATE FIRE MARSHAL'S OFFICE

Model F1Res44 SWC Conical Concealed Horizontal Sidewall Sprinkler — SIN R3531

Technical Specifications
- **Style:** Conical Concealed Sidewall
- **Threads:** 1/2" NPT or ISO 7-1 R1/2
- **Nominal K-Factor:** 4.4 (63 metric)
- **Max. Working Pressure:** 175 psi (12 bar)

Material Specifications
- **Thermal Sensor:** 3 mm glass-bulb
- **Sprinkler Frame:** Brass Alloy
- **Button:** Copper Alloy
- **Sealing Assembly:** Nickel Alloy with PTFE
- **Load Screw:** Bronze Alloy
- **Deflector:** Bronze Alloy

Finishes
(See Table N)

Sensitivity
Fast-response

Temperature Ratings
155°F (68°C)
175°F (79°C) (1)

Cover Plates
SWC Conical Concealed Plate(2)
SWC-2 (Slotted) Conical Concealed Plate(3)

Sprinkler Wrenches
Model W1

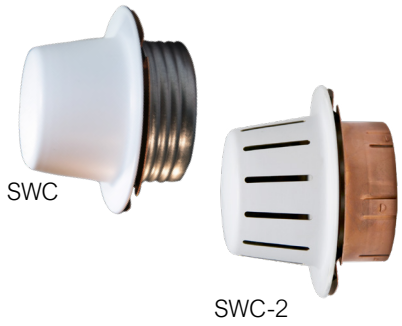

Note:
(1) Not for installation where the maximum ceiling temperature exceeds 100°F due to cover plate temperature rating.
(2) 135°F SWC Conical Concealed Plate for 155°F (68°C) sprinklers
(3) 135°F SWC-2 (Slotted) Conical Concealed Plate for 175°F (79°C) sprinklers

Model F1Res44 SWC Conical Concealed Horizontal Sidewall Sprinkler and Installation Dimensions — Figure 10

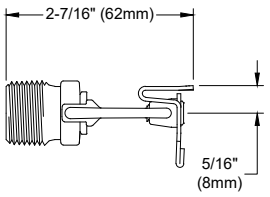

Dimensions

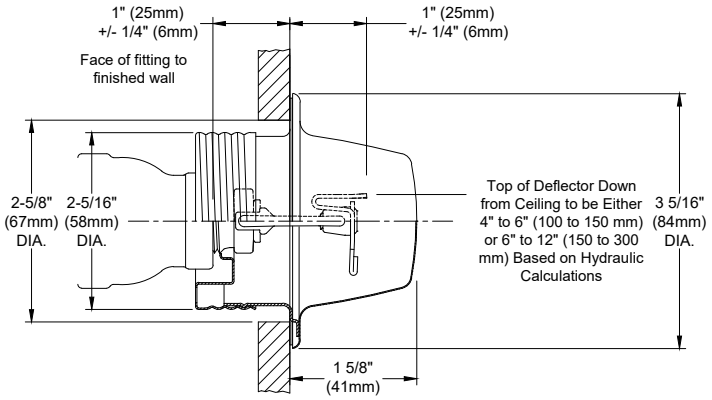

SWC & SWC-2 Concealed Cover Plate Installation

Note: Model F1Res44 sprinklers with SWC cover plate may not be used where the pressure behind the sprinkler is positive with respect to the pressure in the protected area. Ensure that openings in the sprinkler cup are unobstructed following installation.

Model F1Res44 SWC Conical Concealed Horizontal Sidewall Sprinkler Hydraulic Design Criteria — Table K

Minimum Flow and Residual Pressure in Wet Pipe Systems(1)					
Maximum Coverage Area(2) ft. x ft. (m x m)	Ordinary Temperature Rating 155°F (68°C)		Intermediate Temperature Rating 175°F (79°C)		Deflector to Ceiling Distance
	Flow gpm (l/min)	Pressure psi (bar)	Flow gpm (l/min)	Pressure psi (bar)	
12 x 12 (3.7 x 3.7)	13 (49)	8.7 (0.60)	14 (53)	10.2 (0.7)	4 to 6 inches (100 to 150 mm)
14 x 14 (4.3 x 4.3)	14 (53)	10.2 (0.7)	14 (53)	10.2 (0.7)	
15 x 15 (4.6 x 4.6)	16 (61)	13.2 (0.91)	– –	– –	
16 x 16 (4.9 x 4.9)	17 (64)	15.0 (1.03)	– –	– –	
16 x 18 (4.9 x 5.5)(3)	21 (79)	22.8 (1.57)	– –	– –	
16 x 20 (4.9 x 6.1)	23 (87)	27.4 (1.89)	– –	– –	
12 x 12 (3.7 x 3.7)	14 (53)	10.2 (0.7)	– –	– –	6 to 12 inches (150 to 300 mm)
14 x 14 (4.3 x 4.3)	15 (57)	11.7 (0.81)	– –	– –	
15 x 15 (4.6 x 4.6)	17 (64)	15.0 (1.03)	– –	– –	
16 x 16 (4.9 x 4.9)	18 (68)	16.8 (1.16)	– –	– –	
16 x 18 (4.9 x 5.5)(3)	21 (79)	22.8 (1.57)	– –	– –	

Notes:
1. For NFPA 13 installations the flow per sprinkler must be the greater of: (1) the flow listed in the table above or (2) the flow required to achieve a minimum design density of 0.1 gpm/sq ft over the design area of the sprinkler.
2. For coverage area dimensions less than those listed above, use the minimum required flow for the next larger maximum coverage area listed.
3. Previous versions of this bulletin specify different minimum flow rates for some spacings for the Model F1Res44 Horizontal Sidewall sprinkler. Please contact Reliable Technical Services for additional information.

FIELD SET TFM# 21689-A, 21689-B, 21689-C PROJECT# 2025-11-03-04
THESE PLANS AND SPECIFICATIONS ARE REQUIRED TO BE KEPT ON THE JOB SITE UNTIL A FINAL CERTIFICATE OF OCCUPANCY OR PROJECT COMPLETION FORM IS ISSUED BY THIS OFFICE.
No alterations, deletions, additions or modifications of any kind are allowed to this approved set of drawings without written permission of this office.
TENNESSEE STATE FIRE MARSHAL'S OFFICE

Model F1Res58 Horizontal Sidewall Sprinkler & Model F2 Recessed Escutcheon — SIN R3533

Technical Specifications
- **Style:** Sidewall and Recessed Sidewall
- **Threads:** 1/2" NPT or ISO7-1R1/2
- **Nominal K-Factor:** 5.8 (84 metric)
- **Max. Working Pressure:** 175 psi (12 bar)

Material Specifications
- **Thermal Sensor:** 3 mm glass bulb
- **Sprinkler Frame:** Brass Alloy
- **Button:** Copper Alloy
- **Sealing Assembly:** Nickel Alloy with PTFE
- **Load Screw:** Bronze Alloy
- **Deflector:** Bronze Alloy

Finishes
(See Table N)

Sensitivity
Fast-response

Temperature Ratings
155°F (68°C)
175°F (79°C)

Recessed Escutcheons
F2 Recessed

Sprinkler Wrenches
Model W2
Model W1 (Recessed)



Model F1Res58 Residential Horizontal Sidewall Sprinkler Installation Dimensions — Figure 11

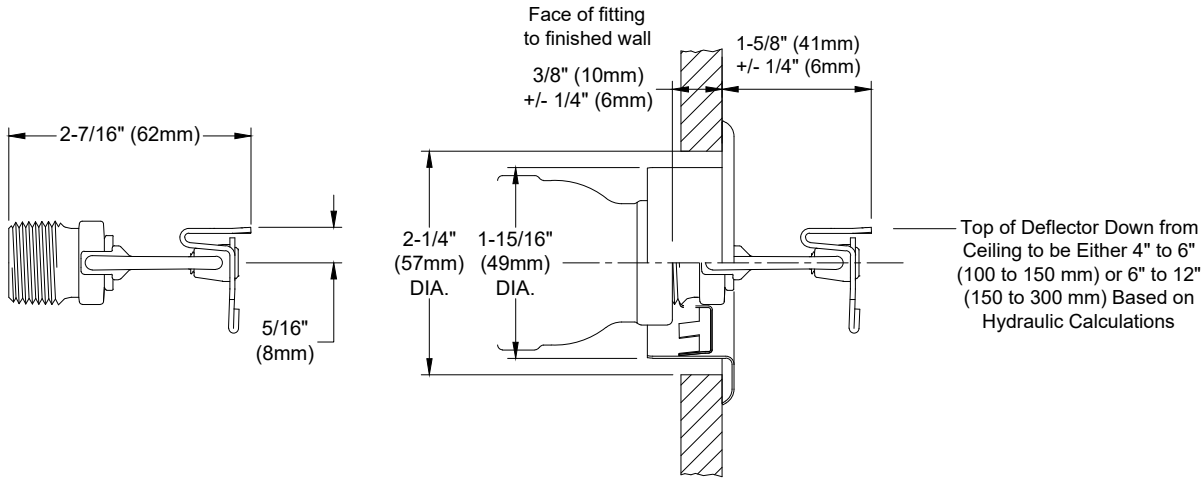

Dimensions — F2 Recessed Escutcheon Installation

Model F1Res58 Horizontal Sidewall Sprinkler Hydraulic Design Criteria — Table L

Minimum Flow and Residual Pressure in Wet Pipe Systems[1]			
Maximum Coverage Area[2] ft. x ft. (m x m)	**Flow gpm (l/min)**	**Pressure psi (bar)**	**Deflector to Ceiling Distance**
12 x 12 (3.7 x 3.7)	16 (61)	7.6 (0.52)	4 to 6 inches (100 to 150 mm)
14 x 14 (4.3 x 4.3)	18 (68)	9.7 (0.66)	
15 x 15 (4.6 x 4.6)	19 (72)	10.7 (0.74)	
16 x 16 (4.9 x 4.9)	21 (80)	13.2 (0.91)	
16 x 18 (4.9 x 5.5)	25 (95)	18.6 (1.28)	
16 x 20 (4.9 x 6.1)	29 (110)	25.0 (1.72)	
12 x 12 (3.7 x 3.7)	22 (83)	14.4 (1.0)	6 to 12 inches (150 to 300 mm)
14 x 14 (4.3 x 4.3)	22 (83)	14.4 (1.0)	
15 x 15 (4.6 x 4.6)	24 (91)	17.1 (1.18)	
16 x 16 (4.9 x 4.9)	26 (98)	20.1 (1.39)	
16 x 18 (4.9 x 5.5)	31 (117)	28.6 (1.97)	

Notes:
1. For NFPA 13 installations the flow per sprinkler must be the greater of: (1) the flow listed in the table above or (2) the flow required to achieve a minimum design density of 0.1 gpm/sq ft over the design area of the sprinkler.
2. For coverage area dimensions less than those listed above, use the minimum required flow for the next larger maximum coverage area listed.
3. Please note SIN difference between F1Res58 HSW (R3533) and F1Res58 HSWX (RA3533).

FIELD SET TFM# 21689-A, 21689-B, 21689-C PROJECT# 2025-11-03-04

THESE PLANS AND SPECIFICATIONS ARE REQUIRED TO BE KEPT ON THE JOB SITE UNTIL A FINAL CERTIFICATE OF OCCUPANCY OR PROJECT COMPLETION FORM IS ISSUED BY THIS OFFICE. No alterations, deletions, additions or modifications of any kind are allowed to this approved set without written permission of this office. TENNESSEE STATE MARSHAL'S OFFICE

Model F1Res58 HSWX Horizontal Sidewall Sprinkler & Model F2 Recessed Escutcheon

SIN RA3533

Technical Specifications
- **Style:** Sidewall and Recessed Sidewall
- **Threads:** 1/2" NPT or ISO7-1R1/2
- **Nominal K-Factor:** 5.8 (84 metric)
- **Max. Working Pressure:** 175 psi (12 bar)

Material Specifications
- **Thermal Sensor:** 3 mm glass bulb
- **Sprinkler Frame:** Brass Alloy
- **Button:** Copper Alloy
- **Sealing Assembly:** Nickel Alloy with PTFE
- **Load Screw:** Bronze Alloy
- **Deflector:** Bronze Alloy

Finishes
(See Table N)

Sensitivity
Fast-response

Temperature Ratings
155°F (68°C)
175°F (79°C)

Recessed Escutcheons
F2 Recessed

Sprinkler Wrenches
Model W2
Model W1 (Recessed)



Model F1Res58 HSWX Residential Horizontal Sidewall Sprinkler Installation Dimensions

Figure 12

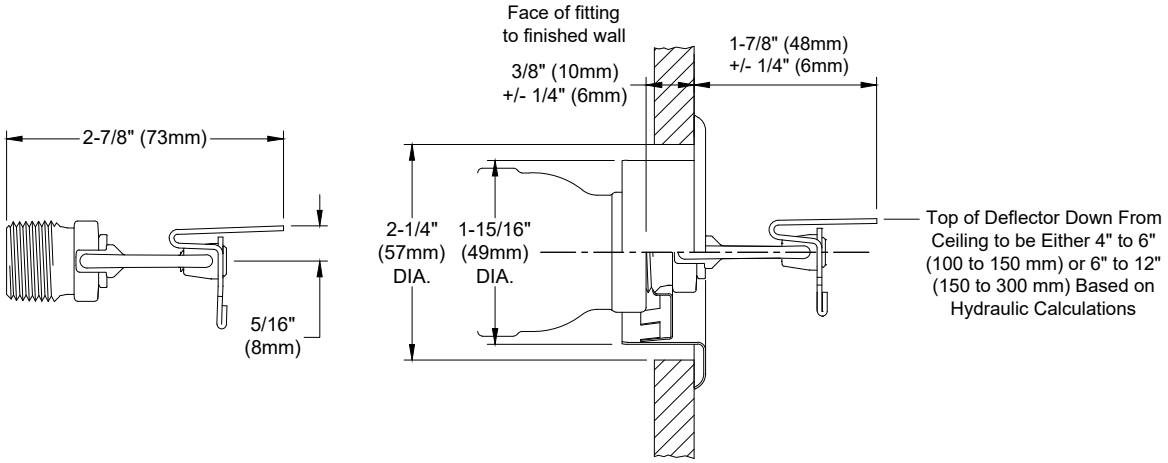

Dimensions

F2 Recessed Escutcheon Installation

Model F1Res58 HSWX Horizontal Sidewall Sprinkler Hydraulic Design Criteria

Table M

Minimum Flow and Residual Pressure in Wet Pipe Systems[1]			
Maximum Coverage Area[2] ft. x ft. (m x m)	**Flow gpm (l/min)**	**Pressure psi (bar)**	**Deflector to Ceiling Distance**
18 x 20 (5.5 x 6.1)	30 (114)	26.8 (1.85)	4 to 6 inches (100 to 150 mm)
20 x 20 (6.1 x 6.1)	30 (114)	26.8 (1.85)	
16 x 22 (4.9 x 6.7)	33 (125)	32.4 (2.23)	
16 x 24 (4.9 x 7.3)	38 (144)	42.9 (2.96)	
14 x 26 (4.3 x 7.9)	42 (160)	52.4 (3.63)	
18 x 20 (5.5 x 6.1)	35 (133)	36.4 (2.51)	6 to 12 inches (150 to 300 mm)
16 x 22 (4.9 x 6.7)	38 (144)	42.9 (2.96)	
16 x 24 (4.9 x 7.3)	42 (160)	52.4 (3.61)	
14 x 26 (4.3 x 7.9)	46 (174)	62.9 (4.34)	

Notes:
1. For NFPA 13 installations the flow per sprinkler must be the greater of: (1) the flow listed in the table above or (2) the flow required to achieve a minimum design density of 0.1 gpm/sq ft over the design area of the sprinkler.
2. For coverage area dimensions less than those listed above, use the minimum required flow for the next larger maximum coverage area listed.
3. Please note SIN difference between F1Res58 HSW (R3533) and F1Res58 HSWX (RA3533).

FIELD SET TFM# 21689-A, 21689-B, 21689-C PROJECT# 2025-11-03-04

THESE PLANS AND SPECIFICATIONS ARE REQUIRED TO BE KEPT ON THE JOB SITE UNTIL A FINAL CERTIFICATE OF OCCUPANCY OR PROJECT COMPLETION FORM IS ISSUED BY THIS OFFICE. No alterations, deletions, additions or modifications of any kind are allowed to this approved set without written permission of this office. TENNESSEE STATE MARSHAL'S OFFICE

Finishes **Table N**

Standard Finishes			Special Application Finishes		
Sprinkler(1)	**F1, F2. & FP(3), Escutcheons**	**CCP, SWC (Conical) Cover Plates (1)**	**Sprinkler (1)**	**F1, F2, & FP(3) Escutcheons**	**CCP, SWC (Conical) Cover Plates (1)**
Bronze	Brass	--	Bright Brass	Bright Brass	Bright Brass
Chrome Plated	Chrome Plated	Chrome Plated	Satin Chrome	Satin Chrome	Satin Chrome
White Polyester (2)	White Polyester	White Paint	Black Polyester (2)	Black Polyester	Black Paint
--	--	--	Custom Color Polyester	Custom Color Polyester	Custom Color Paint
--	--	--	Electroless Nickel PTFE (2)	--	--

Notes:
(1) Paint or any other coating applied over the factory finish will void all approvals and warranties.
(2) cULus Listed Corrosion Resistant.
(3) The Model FP escutcheon assembly consists of an unfinished galvanized cup with a finished escutcheon ring.

Installation

Models F1Res sprinklers are to be installed as shown in this bulletin. Model F1, F2, and FP recessed escutcheons are the only recessed escutcheons to be used with Model F1Res sprinklers. Not all F1Res sprinklers may be used with all recessed escutcheons offered. Confirm listing of escutcheon type for use with individual sprinklers. Use of any other recessed escutcheon will void all approvals and warranties.

For installing Model F1Res sprinklers, use only the Model W2 sprinkler Wrench; for installing Models F1Res Recessed Pendent, Sidewall, Conical Concealed Pendent (CCP), and Sidewall Concealed (SWC and SWC–2) sprinklers use only the Model W1 sprinkler wrench. Use of wrenches other than those specified may damage these sprinklers.

Installation of F1Res sprinklers in a wall or ceiling will require a hole diameter of 2-1/4” (57 mm) for F1 or F2 recessed escutcheons; or 2-5/8” (67 mm) for FP recessed escutcheons, CCP, SWC, and SWC–2 cover plates.

Install F1Res HSW sprinklers with a ceiling to deflector distance that complies with the hydraulic design criteria tables in this bulletin. The flow arrow on deflector must point away from near wall and “Top” marking must face the ceiling.

A ‘leak tight” sprinkler joint can be obtained with the following torque:

- 1/2” NPT and ISO7-1R1/2: 8-18 ft-lbs (11 – 24 N-m)
- 3/4” NPT and ISO7-1R3/4: 14-20 ft-lbs (19 – 27 N-m)

Do not tighten sprinklers over maximum recommended torque. This may cause leakage or impairment of the sprinklers.
Do not install any glass bulb sprinklers where the bulb is cracked or there is a loss of liquid from the bulb.



Model W2



Model W1

Glass bulb sprinklers have orange bulb protectors to minimize bulb damage during shipping, handling and installation. Remove this protection at the time the sprinkler system is placed in service. Removal of the protectors before this time may leave the bulb vulnerable to damage. RASCO wrenches are designed to install sprinklers when protectors are in place. Remove protectors by undoing the clasp by hand. Do not use tools to remove the protectors.

FIELD SET TFM# 21689-A, 21689-B, 21689-C PROJECT# 2025-11-03-04

THESE PLANS AND SPECIFICATIONS ARE REQUIRED TO BE KEPT ON THE JOB SITE UNTIL A FINAL CERTIFICATE OF OCCUPANCY OR PROJECT COMPLETION FORM IS ISSUED BY THIS OFFICE.
No alterations, deletions, additions or modifications of any kind are allowed to this approval without written permission of this office.
TENNESSEE STATE FIRE MARSHAL'S OFFICE

Maintenance

Reliable Model F1Res Sprinklers should be inspected and the sprinkler system maintained in accordance with NFPA 25, 13, 13D, and 13R, as well as the requirements of any Authorities Having Jurisdiction.

Prior to installation, sprinklers should remain in the original cartons and packaging until used. This will minimize the potential for damage to sprinklers that could cause improper operation or non-operation.

Do not clean sprinklers with soap and water, ammonia liquid or any other cleaning fluids. Remove dust by gentle vacuuming without touching the sprinkler.

Replace any sprinkler which has been painted (other than factory applied). Properly installed CCP, SWC, and SWC–2 cover plates will have an air gap that is required for proper operation, do not seal the gap or paint the cover plates.

Replace any sprinkler which has been damaged, where cracks are observed in the glass bulb, or when liquid has been lost from the glass bulb.

A stock of spare sprinklers should be maintained to allow quick replacement of damaged or operated sprinklers.
Failure to properly maintain sprinklers may result in inadvertent operation or non-operation during a fire event.

Listings & Approvals

Listed by Underwriters Laboratories Inc. and UL Certified for Canada (cULus)

Guarantee

For Reliable Automatic Sprinkler Company guarantee, terms, and conditions, visit www.reliablesprinkler.com.

Patents

For patents applicable to products contained in this technical bulletin, please visit www.r-s.co

Ordering Information

Specify the following when ordering:

Sprinkler
- Model (See Table A)
- Temperature Rating
- Threads (NPT or ISO7-1)
- Finish (See Table N)

Escutcheon or Cover Plate
- Model
- Finish (See Table N)

Sprinkler Wrench
- Model W2 (Pendent and HSW)
- W1 (Recessed and Concealed)

Note: Please note SIN difference between F1Res58 HSW (R3533) and F1Res58 HSWX (RA3533).

FIELD SET TFM# 21689-A, 21689-B, 21689-C PROJECT# 2025-11-03-04

THESE PLANS AND SPECIFICATIONS ARE REQUIRED TO BE KEPT ON THE JOB SITE UNTIL A FINAL CERTIFICATE OF OCCUPANCY OR PROJECT COMPLETION FORM IS ISSUED BY THIS OFFICE.
No alterations, deletions, additions or modifications of any kind are allowed to approved or without written permission of this office.
TENNESSEE STATE FIRE MARSHAL'S OFFICE

P/N 9999970235

Miscellaneous

FIELD SET TFM# 21689-A, 21689-B, 21689-C PROJECT# 2025-11-03-04

THESE PLANS AND SPECIFICATIONS ARE REQUIRED TO BE KEPT ON THE JOB SITE UNTIL A FINAL CERTIFICATE OF OCCUPANCY OR PROJECT COMPLETION FORM IS ISSUED BY THIS OFFICE.
No alterations, deletions, additions or modifications of any kind are allowed to this approved set without written permission of this office.
TENNESSEE STATE FIRE MARSHAL'S OFFICE

POTTER
The Symbol of Protection

BELLS
PBA-AC & MBA-DC



UL, ULC, and FM Approved
Sizes Available: 6" (150mm), 8" (200mm) and 10" (250mm)
Voltages Available: 24VAC
120VAC
12VDC (10.2 to 15.6) Polarized
24VDC (20.4 to 31.2) Polarized
Service Use: Fire Alarm
General Signaling
Burglar Alarm
Environment: Indoor or outdoor use (See Note 1)
-40° to 150°F (-40° to 66°C)
(Outdoor use requires weatherproof backbox.)
Termination: AC Bells - 4 No. 18 AWG stranded wires
DC Bells - Terminal strip
Finish: Red powder coating
Optional: Model BBK-1 weatherproof backbox
Model BBX-1 deep weatherproof backbox

These vibrating type bells are designed for use as fire, burglar or general signaling devices. They have low power consumption and high decibel ratings. The unit mounts on a standard 4" (101mm) square electrical box for indoor use or on a model BBK-1 weatherproof backbox or BBX-1 deep weatherproof backbox for outdoor applications. Weatherproof backbox model BBK-1, Stock No. 1500001.

Notes:
1. Minimum dB ratings are calculated from integrated sound pressure measurements made at Underwriters Laboratories as specified in UL Standard 464. UL temperature range is -30° to 150°F (-34° to 66°C).
2. Typical dB ratings are calculated from measurements made with a conventional sound level meter and are indicative of output levels in an actual installation.
3. ULC only applies to MBA DC bells.

Size inches (mm)	Voltage	Model Number	Stock Number	Current (Max.)	Typical dB at 10 ft. (3m) (2)	Minimum dB at 10 ft. (3m) (1)
6 (150)	12VDC	MBA126	1750070	.12A	85	76
8 (200)	12VDC	MBA128	1750080	.12A	90	77
10 (250)	12VDC	MBA1210	1750060	.12A	92	78
6 (150)	24VDC	MBA246	1750100	.06A	87	77
8 (200)	24VDC	MBA248	1750110	.06A	91	79
10 (250)	24VDC	MBA2410	1750090	.06A	94	80
6 (150)	24VAC	PBA246	1806024*	.17A	91	78
8 (200)	24VAC	PBA248	1808024*	.17A	94	77
10 (250)	24VAC	PBA2410	1810024*	.17A	94	78
6 (150)	120VAC	PBA1206	1806120*	.05A	92	83
8 (200)	120VAC	PBA1208	1808120*	.05A	99	84
10 (250)	120VAC	PBA12010	1810120*	.05A	99	86

All DC bells are polarized and have built-in transient protection.
* Does not have ULC listing.

⚠ WARNING

In outdoor or wet installations, bell must be mounted with weatherproof backbox, BBK-1 or BBX-1. Standard electrical boxes will not provide a weatherproof enclosure. If the bell and/or assembly is exposed to moisture, it may fail or create an electrical hazard.

Potter Electric Signal Company, LLC • 2081 Craig Road, St. Louis, MO, 63146-4161 • Phone: 800-325-3936/Canada 888-882-1833 • www.pottersignal.com

FIELD SET TFM# 21689-A, 21689-B, 21689-C PROJECT# 2025-11-03-04

THESE PLANS AND SPECIFICATIONS ARE REQUIRED TO BE KEPT ON THE JOB SITE UNTIL FINAL CERTIFICATE OF OCCUPANCY OR FINAL PROJECT COMPLETION CERTIFICATE IS ISSUED BY THIS OFFICE.
No alterations of these plans, specifications or modifications of this design are allowed without approval of the undersigned and the commission
TENNESSEE STATE FIRE MARSHAL'S OFFICE

Bells Dimensions Inches (mm)
Fig. 1

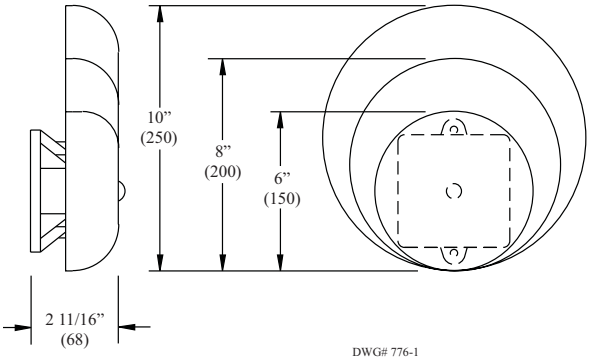

DWG# 776-1

Weatherproof Backbox Dimensions Inches (mm)
Fig. 2

Box has one threaded 1/2" conduit entrance

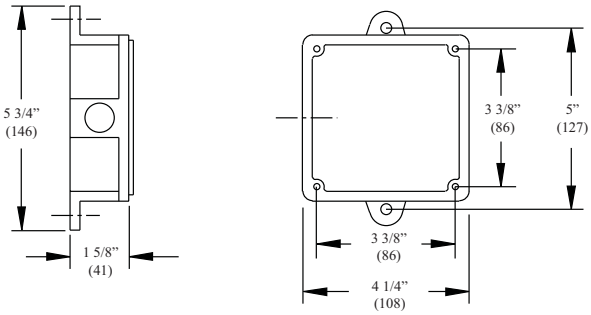

DWG# 776-2

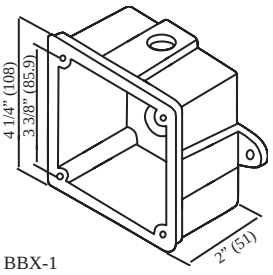

BBX-1

Wiring (rear view)
Fig. 3

A.C. BELLS

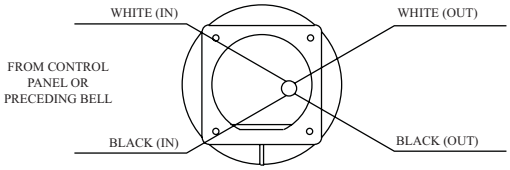

CAUTION:
WHEN ELECTRICAL SUPERVISION IS REQUIRED USE IN AND OUT LEADS AS SHOWN.

NOTES:

1. WHEN USING AC BELLS, TERMINATE EACH EXTRA WIRE SEPARATELY AFTER LAST BELL.
2. END-OF-LINE RESISTOR IS NOT REQUIRED ON AC BELLS.

DWG# 776-3

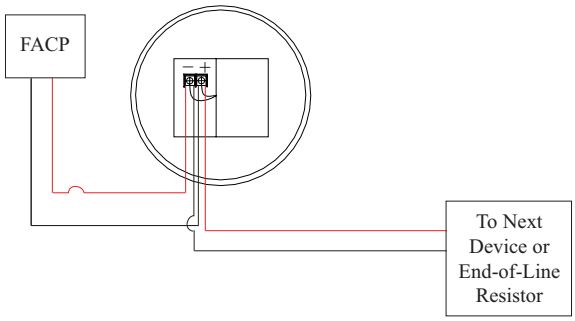

Installation

1. The bell shall be installed in accordance with NFPA 13, 72, or local AHJ. The top of the device shall be no less than 90" AFF and not less than 6" below the ceiling.
2. Remove the gong.
3. Connect wiring (see Fig. 3).
4. Mount bell mechanism to backbox (bell mechanism must be mounted with the striker pointing down).
5. Reinstall the gong (be sure that the gong positioning pin, in the mechanism housing, is in the hole in the gong).
6. Test all bells for proper operation and observe that they can be heard where required (bells must be heard in all areas as designated by the authority having jurisdiction).

⚠ WARNING

Failure to install striker down will prevent bell from operating.

FIELD SET TFM# 21689-A, 21689-B, 21689-C PROJECT# 2025-11-03-04

THESE PLANS AND SPECIFICATIONS ARE REQUIRED TO BE KEPT ON THE JOB SITE UNTIL A FINAL CERTIFICATE OF OCCUPANCY OR PROJECT COMPLETION FORM IS ISSUED BY THIS OFFICE.
No alterations of these plans, additions or modifications of any kind are allowed to this approved set without written permission of this office.
TENNESSEE STATE FIRE MARSHAL'S OFFICE

FireLock® Check Valves

Series 717 Check Valve
Series 717H High Pressure Check Valve

10.08



Series 717H
High Pressure Check Valve
(2 – 3"/DN50 – DN80)



Series 717
(2 ½ – 3"/73 mm – DN80)



Series 717
(4 – 12"/DN100 – DN300)

1.0 PRODUCT DESCRIPTION

Available Sizes

- 2 – 3"/DN50 – DN80 (Series 717H)
- 2 ½ – 12"/73 mm – DN300 (Series 717)

Pipe Material

- Carbon Steel, Schedule 10, Schedule 40. For use with alternative material please contact Victaulic.

Maximum Working Pressure

- Up to 365 psi/2517 kPa/25 bar
- Working pressure dependent on pipe size, valve size and approval requirements.

Application

- Designed for use in Fire Protection systems.
- Prevents back flow.
- Single-disc mechanism incorporates a spring-assisted feature for non-slamming operation.
- Can be installed either vertically (flow upwards only) or horizontally.
- Valve body cast with arrow indicator to assist with proper valve orientation.
- Optional upstream and downstream pressure taps included on select sizes. See Section 3.0.
- Provided with grooved ends.
- Rated for ambient temperature use in fire protection systems.

Available End Connections

- Victaulic Original Groove System (OGS) standard groove

2.0 CERTIFICATION/LISTINGS

LPS 1186: Issue 3.1
Cert/LPCB Ref. 104h/01

ALWAYS REFER TO ANY NOTIFICATIONS AT THE END OF THIS DOCUMENT REGARDING PRODUCT INSTALLATION, MAINTENANCE OR SUPPORT.

victaulic.com
10.08 1479 Rev X Updated 08/2022 © 2022 Victaulic Company. All rights reserved.

FIELD SET TFM# 21689-A, 21689-B, 21689-C PROJECT# 2025-11-03-04

2.0 CERTIFICATION/LISTINGS

Approvals/Listings

Series 717H

Size		Approval/Listing Service Pressures				
Nominal inches DN	**Actual Outside Diameter** inches mm	**cULus** psi kPa	**FM** psi kPa	**LPCB** psi kPa	**VdS** psi kPa	**CCCf** psi kPa
2 DN50	2.375 60.3	365 2517	365 2517	365 2517	363 2500	N/A
2½	2.875 73.0	365 2517	365 2517	365 2517	N/A	363 2500
DN65	3.000 76.1	365 2517	365 2517	365 2517	363 2500	363 2500
3 DN80	3.500 88.9	365 2517	365 2517	365 2517	363 2500	363 2500

Series 717

Size		Approval/Listing Service Pressures				
Nominal inches DN	**Actual Outside Diameter** inches mm	**cULus** psi kPa	**FM** psi kPa	**LPCB** psi kPa	**VdS** psi kPa	**CCCf** psi kPa
2½	2.875 73.0	250 1725	N/A	N/A	N/A	N/A
DN65	3.000 76.1	250 1725	N/A	N/A	232 1600	N/A
3 DN80	3.500 88.9	250 1725	N/A	N/A	232 1600	N/A
4 DN100	4.500 114.3	365 2517	365 2517	365 2517	363 2500	363 2500
DN125	5.500 139.7	365 2517	365 2517	365 2517	363 2500	363 2500
5	5.563 141.3	365 2517	365 2517	365 2517	N/A	N/A
	6.500 165.1	365 2517	365 2517	365 2517	N/A	363 2500
6 DN150	6.625 168.3	365 2517	365 2517	365 2517	363 2500	N/A
8 DN200	8.625 219.1	365 2517	365 2517	348 2400	247 1700	363 2500
10 DN250	10.750 273.0	250 1725	250 1725	250 1725	N/A	232 1600
12 DN300	12.750 323.9	250 1725	250 1725	250 1725	N/A	N/A

FIELD SET TFM# 21689-A, 21689-B, 21689-C PROJECT# 2025-11-03-04

 © 2022 Victaulic Company. All rights reserved.

PLANS AND SPECIFICATIONS JOB SITE REQUIRED TO BE KEPT ON THE OCCUPANCY OR PROJECT COMPLETION FORM IS ISSUED BY OFFICE.
No alterations, additions or modifications of plans and specifications shall be allowed to this approved set without written permission of this office.
TENNESSEE STATE FIRE MARSHAL'S OFFICE

3.0 SPECIFICATIONS – MATERIAL

Body:

☐ Ductile Iron conforming to ASTM A536, Grade 65-45-12.

Body Coating:

☐ Series 717H Body: Black Paint
☐ Series 717H Endface: Electroless Nickel conforming to ASTM B733
☐ Series 717 (2 ½ – 3"/73mm – DN80): PPS Coating
☐ Standard: Series 717 (4 – 12"/DN100 – DN300): Black Paint
☐ Optional: Series 717 (4 – 12"/DN100 – DN300): PPS Coating

Body Seat:

☐ Series 717H: Nitrile O-ring installed into an Electroless Nickel plating conforming to ASTM B733
☐ Series 717 (2 ½" – 3"/73 mm – DN80): PPS Coated Ductile Iron
☐ Series 717 (4 – 12"/DN100 – DN300): Ductile Iron with Electroless Nickel plating conforming to ASTM B733

Disc Seal or Coating: (specify choice[1])

☐ **Nitrile (Series 717H only)**
☐ **EPDM**
NOT COMPATIBLE FOR PETROLEUM SERVICES.

Discs:

☐ Series 717H: CF8M Cast Stainless Steel
☐ Series 717 (2 ½ – 3"/73 mm – DN80): Aluminum bronze with elastomer seal
☐ Series 717 (4 – 12"/DN100 – DN300): Elastomer encapsulated disc.

Shaft:

☐ Series 717H: Brass
☐ Series 717 (2 ½ – 3"/73 mm – DN80): Type 416 Stainless Steel
☐ Series 717 (4 – 12"/DN100 – DN300): Type 316 Stainless Steel

Spring:

☐ Type 302/304 Stainless Steel

Shaft Plug:

☐ Series 717H: Carbon Steel Zinc Plated
☐ Series 717: Carbon Steel Zinc Plated

Pipe Plug:

☐ Series 717H: Carbon Steel Zinc Plated
☐ Series 717: Carbon Steel Zinc Plated

Optional Pressure Taps:

☐ Series 717H: Available on all sizes
☐ Series 717: Available on sizes 4 – 12"/DN100 – DN300

FIELD SET TFM# 21689-A, 21689-B, 21689-C PROJECT# 2025-11-03-04

 © 2022 Victaulic Company. All rights reserved.

PLANS AND SPECIFICATIONS JOB SITE REQUIRED TO BE KEPT ON THE JOB SITE UNTIL A FINAL CERTIFICATE OF OCCUPANCY OR PROJECT COMPLETION FORM IS ISSUED BY THIS OFFICE.
No alterations, additions or modifications of these plans and specifications are allowed to this approved set without written permission of this office.
TENNESSEE STATE FIRE MARSHAL'S OFFICE

4.0 DIMENSIONS

Series 717H

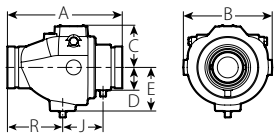

Typical 2 – 3"/50 – 80 mm

Size		Dimensions						Weight
Nominal inches DN	**Actual Outside Diameter** inches mm	**E to E** **A** inches mm	**B** inches mm	**C** inches mm	**E** inches mm	**J** inches mm	**R** inches mm	**Approx. (Each)** lb kg
2 DN50	2.375 60.3	8.66 220	6.46 165	3.23 83	3.02 77	2.80 72	4.25 108	10.7 4.9
2½	2.875 73.0	9.37 238	6.94 177	3.31 85	3.40 87	3.38 86	4.38 112	13.8 6.3
DN65	3.000 76.1	9.37 238	6.94 177	3.31 85	3.40 87	3.38 86	4.38 112	13.8 6.3
3 DN80	3.500 88.9	9.62 244	7.44 189	3.53 90	3.65 93	3.38 86	4.63 118	20.0 9.1

FIELD SET TFM# 21689-A, 21689-B, 21689-C PROJECT# 2025-11-03-04

 © 2022 Victaulic Company. All rights reserved.

PLANS AND SPECIFICATIONS JOB SITE REQUIRED TO BE KEPT ON THE CERTIFICATE OF OCCUPANCY OR PROJECT COMPLETION FORM IS ISSUED BY OFFICE.
No alterations, additions or modifications of these plans and specifications are allowed to this approved set without written permission of this office.
TENNESSEE STATE FIRE MARSHAL'S OFFICE

4.1 DIMENSIONS

Series 717

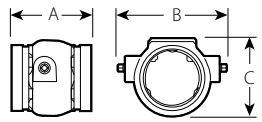

Typical 2 ½ – 3"/73 mm – DN80

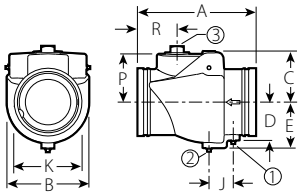

① ½" NPT Upstream Drain
② ½" NPT Downstream Drain
③ 2" NPT (Drain Optional)

Typical 4 – 8"/DN100 – DN200

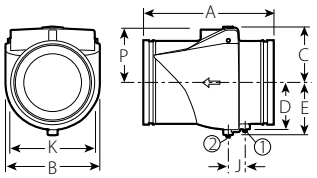

① ½" NPT Upstream Drain
② ½" NPT Downstream Drain

Typical 10 – 12"/DN250 – DN300

Size		Dimensions								Weight
Nominal inches DN	**Actual Outside Diameter** inches mm	**E to E** **A** inches mm	**B** inches mm	**C** inches mm	**E** inches mm	**J** inches mm	**K** inches mm	**P** inches mm	**R** inches mm	**Approx. (Each)** lb kg
2½	2.875 73.0	3.88 99	4.26 109	3.57 91	– –	– –	– –	– –	– –	3.6 1.6
DN65	3.000 76.1	3.88 99	4.26 108	3.57 91	– –	– –	– –	– –	– –	3.6 1.6
3 DN80	3.500 88.9	4.25 108	5.06 129	4.17 106	– –	– –	– –	– –	– –	4.5 2.0
4 DN100	4.500 114.3	9.63 245	6.00 152	3.88 99	3.50 89	2.00 51	4.50 114	3.50 89	3.35 85	20.0 9.1
DN125	5.500 139.7	10.50 267	6.80 173	4.50 114	4.17 106	2.15 55	5.88 149	4.08 104	3.98 101	27.0 12.2
5	5.563 141.3	10.50 267	6.80 173	4.50 114	4.17 106	2.15 55	5.88 149	4.08 104	3.98 101	27.0 12.2
	6.500 165.1	11.50 292	8.00 203	5.00 127	4.50 114	2.38 60	6.67 169	4.73 120	3.89 99	38.0 17.2
6 DN150	6.625 168.3	11.50 292	8.00 203	5.00 127	4.50 114	2.38 60	6.67 169	4.73 120	3.89 99	38.0 17.2
8 DN200	8.625 219.1	14.00 356	9.88 251	6.06 154	5.65 144	2.15 55	8.85 225	5.65 144	5.75 146	64.0 29.0
10 DN250	10.750 273.0	17.00 432	12.00 305	7.09 180	6.69 170	2.15 55	10.92 277	6.73 171	– –	100.0 45.4
12 DN300	12.750 323.9	19.50 495	14.00 356	8.06 205	7.64 194	2.51 64	12.81 325	7.73 196	– –	140.0 63.5

FIELD SET TFM# 21689-A, 21689-B, 21689-C PROJECT# 2025-11-03-04

 © 2022 Victaulic Company. All rights reserved.

PLANS AND SPECIFICATIONS ARE REQUIRED TO BE KEPT ON THE JOB SITE UNTIL A FINAL CERTIFICATE OF OCCUPANCY OR PROJECT COMPLETION FORM IS ISSUED BY THIS OFFICE.
No alterations, additions or modifications of these plans and specifications are allowed to this approved set without written permission of this office.
TENNESSEE STATE FIRE MARSHAL'S OFFICE

5.0 PERFORMANCE

Flow Characteristics

The charts below express the flow of water at 60°F/16°C through valve.

Formulas for C_v/K_v values:

$$\Delta P = \frac{Q^2}{C_v^2}$$

$$Q = C_v \times \sqrt{\Delta P}$$

Where:
Q = Flow (GPM)
ΔP = Pressure Drop (psi)
C_v = Flow Coefficient

$$\Delta P = \frac{Q^2}{K_v^2}$$

$$Q = K_v \times \sqrt{\Delta P}$$

Where:
Q = Flow (m^3/hr)
ΔP = Pressure Drop (Bar)
K_v = Flow Coefficient

Series 717H

Size		Flow Characteristics
Nominal inches DN	**Actual Outside Diameter** inches mm	**Full Open** C_v K_v
2 DN50	2.375 60.3	160 138
2½	2.875 73.0	215 186
DN65	3.000 76.1	215 186
3 DN80	3.500 88.9	315 272

Series 717

Size		Flow Characteristics
Nominal inches DN	**Actual Outside Diameter** inches mm	**Full Open** C_v K_v
2½	2.875 73.0	140 121
DN65	3.000 76.1	140 121
3 DN80	3.500 88.9	250 216
4 DN100	4.500 114.3	390 337
DN125	5.500 139.7	700 606
5	5.563 141.3	700 606
	6.500 165.1	1000 865
6 DN150	6.625 168.3	1000 865
8 DN200	8.625 219.1	1800 1557
10 DN250	10.750 273.0	3000 2595
12 DN300	12.750 323.9	4200 3633

FIELD SET TFM# 21689-A, 21689-B, 21689-C PROJECT# 2025-11-03-04

 © 2022 Victaulic Company. All rights reserved.

THIS PLANS AND SPECIFICATIONS ARE REQUIRED TO BE KEPT ON THE JOB SITE UNTIL A FINAL CERTIFICATE OF OCCUPANCY OR PROJECT COMPLETION FORM IS ISSUED BY THE OFFICE.
No alterations, additions, additions or modifications of this plan are allowed to this approved set without written permission of this office.
TENNNESSEE STATE FIRE MARSHAL'S OFFICE

5.0 PERFORMANCE (CONTINUED)

Flow Characteristics

The charts below express the flow of water at 60°F/16°C through valve.

S717H

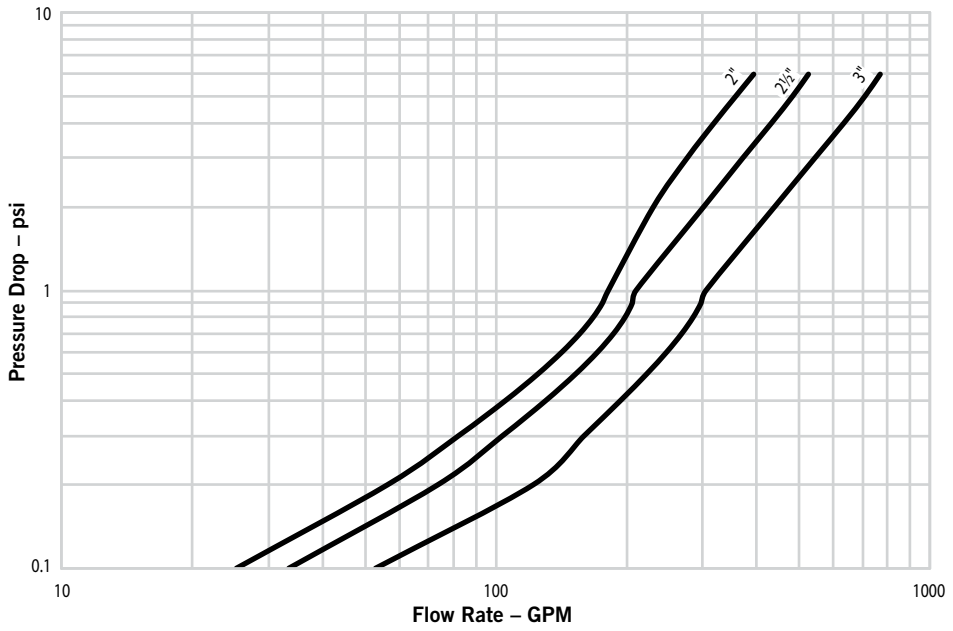

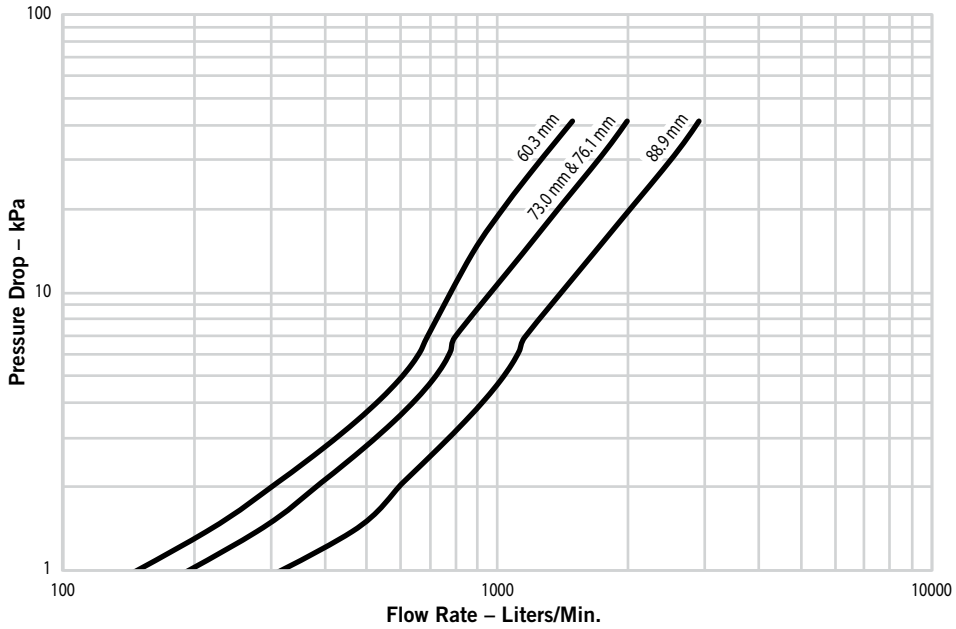

FIELD SET TFM# 21689-A, 21689-B, 21689-C PROJECT# 2025-11-03-04

 © 2022 Victaulic Company. All rights reserved.

PLANS AND SPECIFICATIONS JOB SITE REQUIRED TO BE KEPT ON THE JOB SITE UNTIL A FINAL CERTIFICATE OF OCCUPANCY OR PROJECT COMPLETION FORM IS ISSUED BY THIS OFFICE.
No alterations, additions or modifications of these plans are allowed to this approved set without written permission of this office.
TENNESSEE STATE FIRE MARSHAL'S OFFICE

5.1 PERFORMANCE

Flow Characteristics

The charts below express the flow of water at 60°F/16°C through valve.

S717

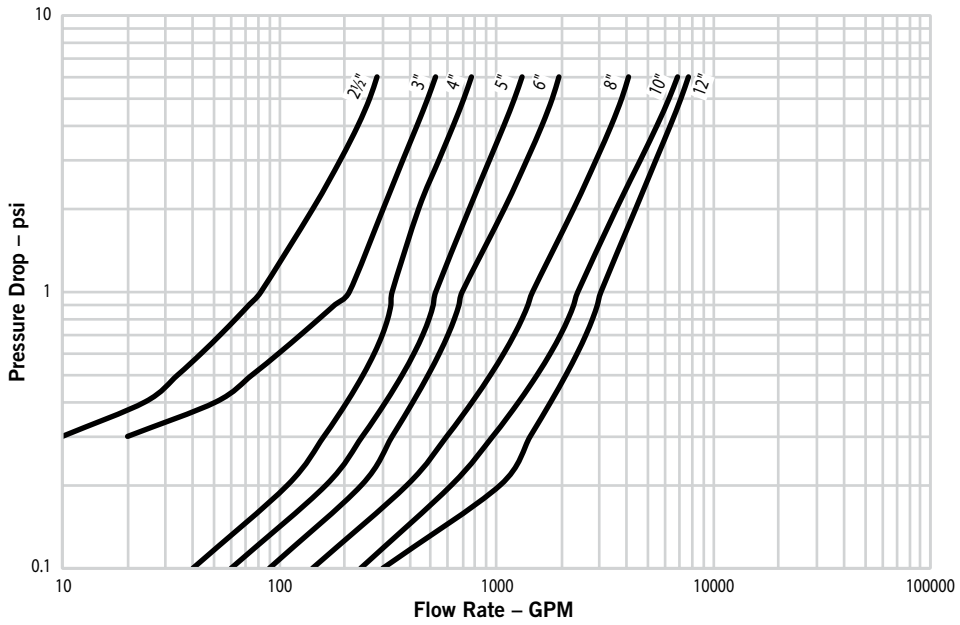

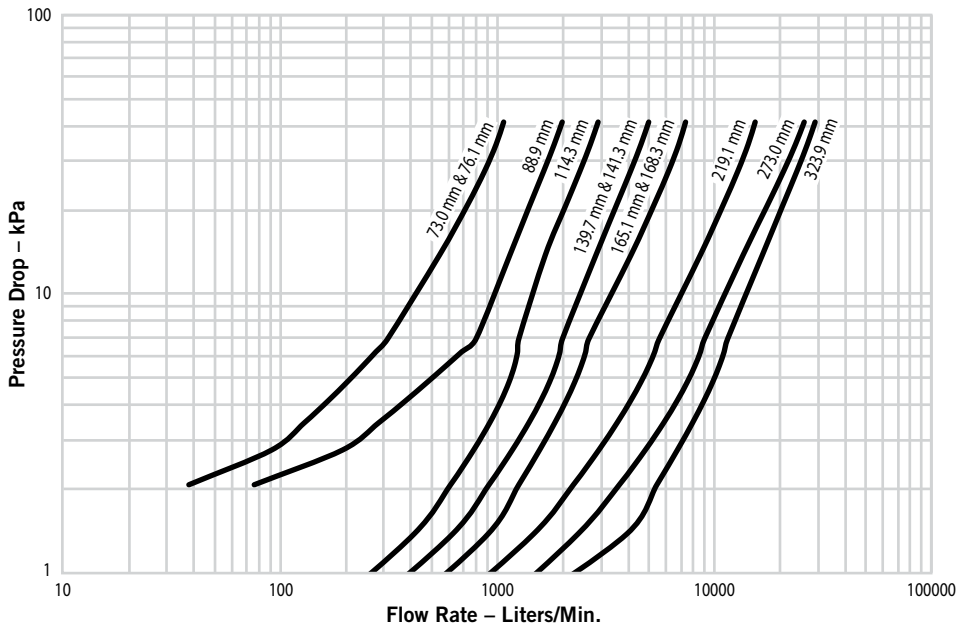

FIELD SET TFM# 21689-A, 21689-B, 21689-C PROJECT# 2025-11-03-04

 © 2022 Victaulic Company. All rights reserved.

PLANS AND SPECIFICATIONS JOB SITE REQUIRED TO BE KEPT ON THE COMPLETION OF PROJECT OR PRIOR TO OCCUPANCY, WHICHEVER COMES FIRST. A FINAL CERTIFICATE OF OCCUPANCY OR PROJECT COMPLETION FORM IS ISSUED BY THIS OFFICE.
No alterations, additions or modifications of these plans are allowed to this approved set without written permission of this office.
TENNESSEE STATE FIRE MARSHAL'S OFFICE

6.0 NOTIFICATIONS

⚠ WARNING



- **Depressurize and drain the piping system before attempting to install, remove, adjust, or maintain any Victaulic piping products.**

7.0 REFERENCE MATERIALS

05.01: Seal Selection Guide
10.01: Regulatory Approval Reference Guide
29.01: Terms and Conditions/Warranty
I-100: Field Installation Handbook

FIELD SET TFM# 21689-A, 21689-B, 21689-C PROJECT# 2025-11-03-04

User Responsibility for Product Selection and Suitability
Each user bears final responsibility for making a determination as to the suitability of Victaulic products for a particular end-use application, in accordance with industry standards and project specifications, as well as Victaulic performance, maintenance, safety, and warning instructions. Nothing in this or any other document, nor any verbal recommendation, advice, or opinion from any Victaulic employee, shall be deemed to alter, vary, supersede, or waive any provision of Victaulic Company's standard conditions of sale, installation guide, or this disclaimer.

Intellectual Property Rights
No statement contained herein concerning a possible or suggested use of any material, product, service, or design is intended, or should be constructed, to grant any license under any patent or other intellectual property right of Victaulic or any of its subsidiaries or affiliates covering such use or design, or as a recommendation for the use of such material, product, service, or design in the infringement of any patent or other intellectual property right. The terms "Patented" or "Patent Pending" refer to design or utility patents or patent applications for articles and/or methods of use in the United States and/or other countries.

Note
This product shall be manufactured by Victaulic or to Victaulic specifications. All products to be installed in accordance with current Victaulic installation/assembly instructions. Victaulic reserves the right to change product specifications, designs and standard equipment without notice and without incurring obligations.

Installation
Reference should always be made to the Victaulic installation handbook or installation instructions of the product you are installing. Handbooks are included with each shipment of Victaulic products, providing complete installation and assembly data, and are available in PDF format on our website at www.victaulic.com.

Warranty
Refer to the Warranty section of the current Price List or contact Victaulic for details.

Trademarks
Victaulic and all other Victaulic marks are the trademarks or registered trademarks of Victaulic Company, and/or its affiliated entities, in the U.S. and/or other countries.

PLANS AND SPECIFICATIONS JOB SITE REQUIRED TO BE KEPT ON THE UNTIL A FINAL CERTIFICATE OF OCCUPANCY OR PROJECT COMPLETION FORM IS ISSUED BY OFFICE.
No alterations, additions or modifications of these plans and specifications are allowed to this approved set without written permission of this office.
TENNESSEE STATE FIRE MARSHAL'S OFFICE

 © 2022 Victaulic Company. All rights reserved.

data sheet

ARGCO

GUARANTEED

FIRE SPRINKLER SPARE HEADBOXES



Heavy gauge steel construction

Knockouts and shelf to accommodate any 1/2” or 3/4” sprinkler head

All-welded construction and full length hinge

Red powder coated finish

Slotted for easy mounting with screws, rivets or strapping

3 Head Box

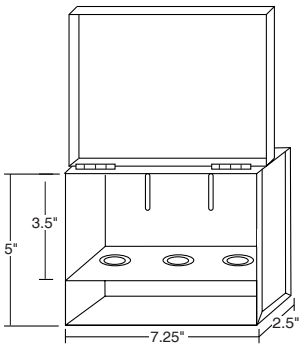

(65-10-152)

12 Head Box

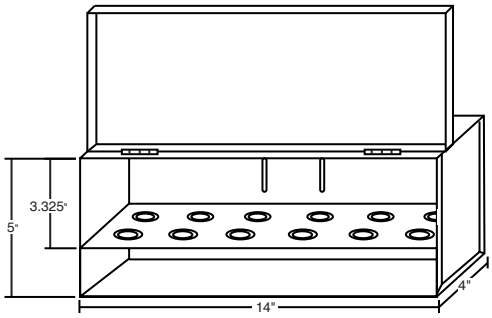

(65-10-150)

6 Head Box

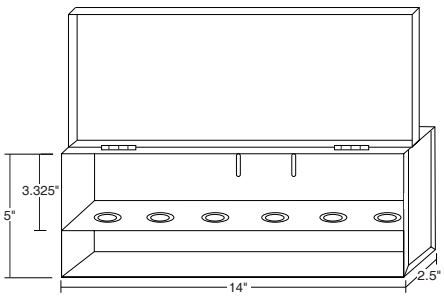

(65-10-151)

6 Large Head Box

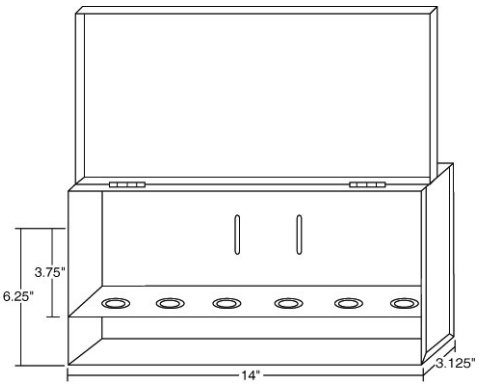

(65-10-151A)

The information contained herein is produced in good faith and is believed to be reliable but is for guidance only. ARGCO and its agents cannot assume liability or responsibility for results obtained in the use of its product by persons whose methods are outside or beyond our control. It is the user's responsibility to determine the suitability of any of the products, methods of use, or preparation prior to use, mentioned in our literature. It is the user's responsibility to observe and adapt such precautions as may be advisable for the protection of personnel and property in the handling and use of any of our products.

FOR MORE INFORMATION CALL ARGCO AT 1-800-854-1015
OR LOG ONTO WWW.ARGCO.COM

THESE PLANS AND SPECIFICATIONS ARE REQUIRED TO REMAIN ON THE JOB SITE UNTIL A FINAL INSPECTION OF OCCUPANCY OR THE CERTIFICATE OF COMPLETION FORM IS ISSUED BY THIS OFFICE.
No alterations, deletions, additions or modifications of any kind are allowed to this approved set without written permission of this office.
TENNESSEE STATE FIRE MARSHAL'S OFFICE

FIELD SET TFM# 21689-A, 21689-B, 21689-C PROJECT# 2025-11-03-04

data sheet

ARGCO

GUARANTEED

6” x 2”
ALUMINUM SPRINKLER IDENTIFICATION SIGNS

All signs .020 Aluminum - Available as generic signs or personalized

AIR CONTROL 50-10-010	COMBINATION STANDPIPE 50-10-088	FIRE DEPARTMENT CONNECTION 50-10-189	IN THIS BUILDING 50-10-250	OPEN SPRINKLER CONTROL 50-10-300	TEST & DRAIN 50-10-355
AIR LINE 50-10-020	CONTROL VALVE 50-10-100	FIRE SPRINKLER ALARM 50-10-220	IN THIS SECTION 50-10-260	OPEN SPRINKLER DRAIN 50-10-310	TEST VALVE 50-10-380
ALARM LINE 50-10-030	DO NOT CLOSE 50-10-129	FIRE SPRINKLER PIPE 50-10-221	LOW POINT DRAIN 50-10-275	OPEN VALVE 50-10-312	WATER MOTOR LINE 50-10-390
ALARM TEST 50-10-040	DRAIN 50-10-130	FIRE SPRINKLER CONTROL VALVE 50-10-224	MAIN CONTROL 50-10-280	SPRINKLER 50-10-317	WET STANDPIPE 50-10-400
ANTI-FREEZE SYSTEM 50-10-045	DRAIN VALVE 50-10-140	FIRE SPRINKLER VALVE 50-10-225	MAIN DRAIN 50-10-290	SPRINKLER VALVE ROOM 50-10-340	WET STANDPIPE SHUTOFF 50-10-420
AUTOMATIC SPRINKLER SHUTOFF 50-10-050	DRY STANDPIPE 50-10-150	FIRE SPRINKLER RISER INSIDE 50-10-228	NORMALLY CLOSED 50-10-293	STANDPIPE SYSTEM 50-10-350	 50-10-425
AUXILIARY DRAIN 50-10-070	ENTIRE SYSTEM 50-10-160	INSPECTORS TEST 50-10-270	OPEN SPRINKLER 50-10-297		

Man□ ot□er generi□ □ign□ in □to□□. □all for detail□.

T□e infor□ation □ontained □erein i□ □rodu□ed in good fait□ and i□ □elie□ed to □e relia□le □ut i□ for guidan□e onl□. □RG□O and it□ agent□ □annot a□□u□ e lia□ilit□ or re□□on□i□ilit□ for re□ult□ o□tained in t□e u□e of it□ □rodu□t □□ □er□on□ □□o□e □et□od□ are out□ide or □e□ond our □ontrol. It i□ t□e u□er□□ re□□on□i□ilit□ to deter□ine t□e □uita□ilit□ of an□ of t□e □rodu□t□□□ et□od□ of u□e□or □re□aration □rior to u□e□□ entioned in our literature. It i□ t□e u□er□□ re□□on□i□ilit□ to o□□er□e and ada□t □u□□ □re□aution□ a□ □ a□ □e ad□i□a□le for t□e □rote□tion of □er□onnel and □ro□ert□ in t□e □andling and u□e of an□ of our □rodu□t□.

FOR MORE INFORMATION CALL ARGCO AT 1-800-854-1015
OR LOG ONTO WWW.ARGCO.COM

THESE PLANS AND SPECIFICATIONS ARE REQUIRED TO BE KEPT ON THE JOB SITE UNTIL A FINAL CERTIFICATE OF OCCUPANCY OR PROJECT COMPLETION FORM IS ISSUED BY THIS OFFICE.
No alterations, deletions, additions or modifications of any kind are allowed to this approved set without written permission of this office.
TENNESSEE STATE FIRE MARSHAL'S OFFICE

FIELD SET TFM# 21689-A, 21689-B, 21689-C PROJECT# 2025-11-03-04

C-AIRE®
COMPRESSORS

S110

WHISPER QUIET SERIES

Digital Air Maintenance Device (AMD) GEN-3 with Leak Detection™

(See reverse)

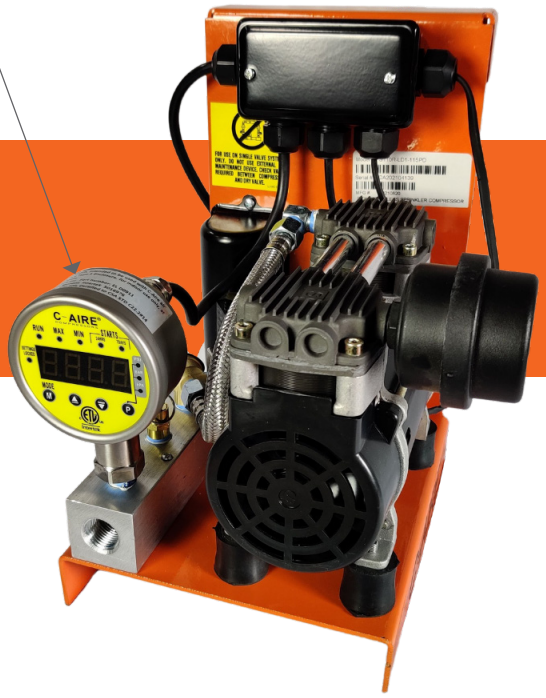

PRODUCT NUMBERING SYSTEM

S110R - LD1 - 115PD

MOUNTING OPTIONS	PHASE	VOLTAGE	STANDARD OPTIONS
R: Riser Mount	**1:** Single Phase	115	**P:** Prewired Power Cord **D:** Digital AMD Gen-3

- ✓ Digital AMD Gen-3 with Leak Detection™
- ✓ Appropriate for single-valve systems
- ✓ Whisper quiet
- ✓ Oil-free and low maintenance
- ✓ 1-year warranty
- ✓ Low vibration
- ✓ Fast and simple installation
- ✓ Compact design
- ✓ Versatile mounting to riser or wall
- ✓ CAD & Revit files available

SYSTEM SIZE	PSI	GAL
PRE-ACTION	10	511
LOW PRESSURE	18	284
STANDARD PRESSURE	40	128

IDEAL FOR QUIET SETTINGS

NURSING HOMES | CHURCHES | APARTMENT BUILDINGS

TECHNICAL SPECIFICATIONS

HORSEPOWER	0.5
PRESSURE SWITCH	Digital AMD GEN-3 Adjustable 5-55 PSI Factory Set at 10-20 PSI Minimum Differential: 5 PSI
CFM	1.55 @ 10 PSI
PUMP	2 Cylinder, Oil-Free
NOISE LEVEL	52 dBA
OUTLET	1/2" NPT
DIMENSIONS (LxDxH)	9.75" x 10.75" x 12"
SHIPPING WEIGHT	29 lbs.

ELECTRICAL SPECIFICATIONS

PHASE/ VOLTS	FULL LOAD AMPS	BREAKER SIZE (A)	WIRE SIZE (AWG)		
			25'	50'	75'
1/115	3.2	15	12	12	10

ACCESSORIES INCLUDED

- **Mounting bracket w/hose clamps and mounting hardware**
- **1/2" x 30" flexible hose**
- **Power cord for installation and testing purposes.** Refer to the authority having jurisdiction regarding hard wiring requirements.

ACCESSORIES AVAILABLE

- **1/2" x 30" stainless steel flexible hose**
  Part: DT 3005 H
- **1/2" x 48" flexible hose**
  Part: DT 4805 H
- **1/2" x 72" flexible hose**
  Part: DT 7205 H

FIELD SET TFM# 21689-A, 21689-B, 21689-C PROJECT# 2025-11-03-04

THESE PLANS AND SPECIFICATIONS ARE REQUIRED TO BE KEPT ON THE JOB SITE UNTIL A FINAL CERTIFICATE OF OCCUPANCY OR PROJECT COMPLETION FORM IS ISSUED BY THIS OFFICE.
No alterations, deletions, additions or revisions of any kind are allowed to this approved set, without written permission of this office.
TENNESSEE STATE FIRE MARSHAL'S OFFICE

S110R.0

C-AIRE® COMPRESSORS

SERVICE · QUALITY · INNOVATION

WHISPER QUIET SERIES

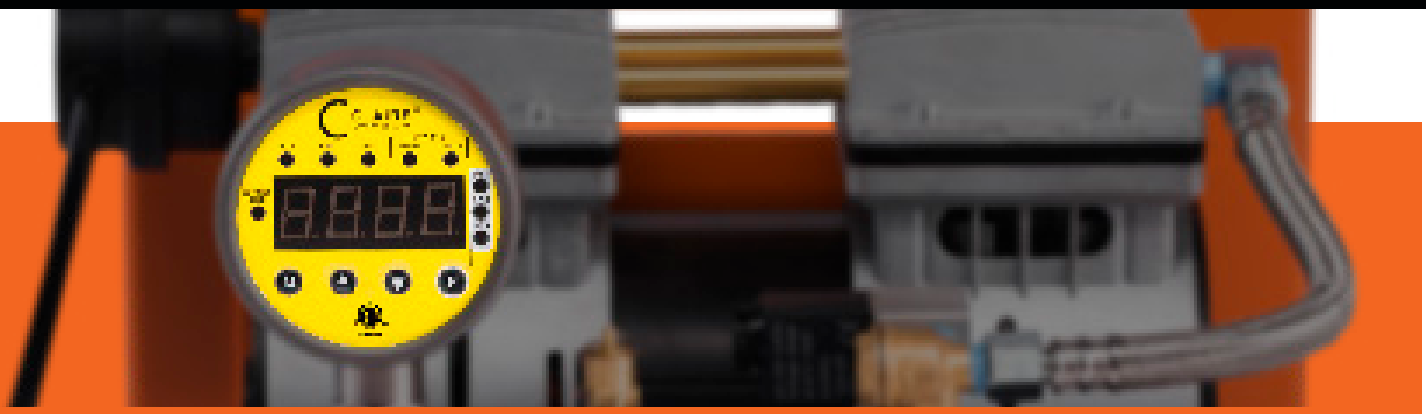

Digital Air Maintenance Device (AMD) GEN-3 with Leak Detection™

FEATURES

- Digitally set system pressure in seconds
- For use on single valve systems
- IP65 water resistance rated (NEW!)
- Flash memory
- Measures system air leaks (NEW!)
- Tamper proof lock-out setting
- Ceramic digital pressure sensor (NEW!)
- 304 stainless steel housing (NEW!)

Digital Air Maintenance Device (AMD) GEN-3 with Leak Detection™

Leak Detection™ quantifies the amount of air leaking from the system by tracking the total number of starts during two trailing periods. On site users can quickly access the total number of starts during the past 24 hours and 7 days to determine leak severity and identify trends. Additionally, if repairs to leaks have been made, Leak Detection™ can be used to measure what percent of total leaks have been sealed.

Data can be entered on our website for a detailed assessment of leaks, as well as determine if the leaks are within compliance of NFPA standards.

Air Maintenance Device
ETL Listed
USA: UL 508
Canada: C22.2 No. 14
Patent Pending

FIELD SET TFM# 21689-A, 21689-B, 21689-C PROJECT# 2025-11-03-04

THESE PLANS AND SPECIFICATIONS ARE REQUIRED TO BE KEPT ON THE JOB SITE UNTIL A FINAL CERTIFICATE OF OCCUPANCY OR PROJECT COMPLETION FORM IS ISSUED BY THIS OFFICE.

No alterations, deletions, additions or revisions of any kind are allowed to this approved set without written permission of this office.

TENNESSEE STATE FIRE MARSHAL'S OFFICE

FireLock® Zone Control Riser Module

SERIES 247

SEE VICTAULIC PUBLICATION 10.01 FOR DETAILS

Designed for NFPA 13, 13D and 13R commercial and residential requirements, the Victaulic Series 247 Zone Control Riser Module features a cast body, and is compact and easy to install in zoned wet sprinkler systems. The integrated module body consists of a shut off valve, test and drain valve combination and different orifice sizes (K factors), a UL Listed and FM Approved Flow Switch, and a Pressure Gauge. The Series 247 FireLock Zone Control Riser Module is available in sizes from 1 through 2"/33.4 - 60.3mm. The 1" module has 1" FNPT ends on the main pipe. The 1¼" through 2" modules have grooved ends for installation in the horizontal or vertical up-flow positions with UL Listed, FM Approved Victaulic grooved couplings. Each module has a 1" NPT drain port.
The Series 247 FireLock Zone Control Riser Module is FM Approved for working pressures up to 365psi/2517 kPa and is UL and ULC Listed for working pressures up to 300psi/2065kPa. An optional pressure relief valve kit is available for all sizes. Pressure relief valve kit is FM Approved and UL and ULC Listed for working pressures up to 175psi/1200kPa.



STYLE 247

DIMENSIONS

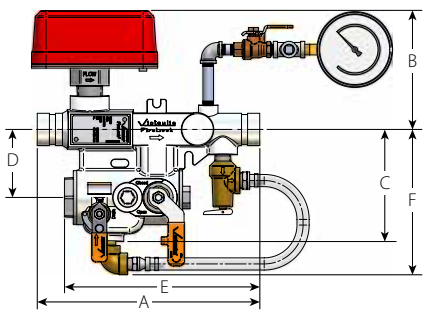

1 – 2"/25 – 50 mm Nominal Sizes

(Valves shown above in the "test" position. Shown with Pressure Relief Valve Kit Installed)

Module Body Size			Dimensions – Inches/mm						Aprx. Weight Each
Nominal Diameter Inches/mm	Actual Outside Diameter Inches/mm	Drain Size Inches/mm	A	B	C	D	E (Groove)	F	Lbs./kgs
1 25	1.315 33.4	1 33.4	11.45 290.8	6.00 152.4	5.77 146.5	3.50 88.9	10.05 255.3	7.48 190.0	15.2 6.9
1 ¼ 32	1.660 42.2	1 33.4	11.45 290.8	6.00 152.4	5.77 146.5	3.50 88.9	10.05 255.3	7.48 190.0	15.2 6.9
1 ½ 40	1.900 48.3	1 33.4	11.45 290.8	6.13 155.7	5.77 146.5	3.50 88.9	10.05 255.3	7.48 190.0	15.5 7.0
2 50	2.375 60.3	1 33.4	11.45 290.8	6.43 163.3	5.77 146.5	3.50 88.9	10.05 255.3	7.48 190.0	19.9 9.0

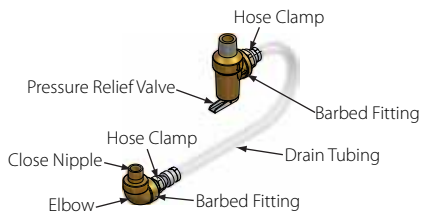

Optional Pressure Relief Valve Kit Detail

Nominal Size inches	Orifices
1	K2.8, K3.0, K3.5, K4.2, K4.9, K5.6
1.25	K2.8, K3.0, K3.5, K4.2, K4.9, K5.6
1.5	K2.8, K3.0, K3.5, K4.2, K4.9, K5.6
2	K2.8, K3.0, K3.5, K4.2, K4.9, K5.6

Nominal Size inches	Drain Type	Drain Size
1	FNPT	1"
1.25	FNPT	1"
1.5	FNPT	1"
2	FNPT	1"

JOB/OWNER

System No. _____

Location _____

CONTRACTOR

Submitted By _____

Date _____

ENGINEER

Spec Sect _____ Para _____

Approved _____

Date _____

THESE PLANS AND SPECIFICATIONS ARE NOT APPROVED TO BE KEPT ON THE JOB SITE UNTIL A FINAL CERTIFICATE OF OCCUPANCY OR PROJECT COMPLETION FORM IS ISSUED BY THE BUILDING OFFICE
TENNESSEE STATE FIRE MARSHAL'S OFFICE
No alterations, additions or modifications shall be allowed to this approved plan without permission of this office

FIELD SET TFM# 21689-A, 21689-B, 21689-C PROJECT# 2025-11-03-04

www.victaulic.com

VICTAULIC IS A REGISTERED TRADEMARK OF VICTAULIC COMPANY. © 2024 VICTAULIC COMPANY. ALL RIGHTS RESERVED.

FireLock® Zone Control Riser Module

SERIES 247

MATERIAL SPECIFICATIONS

Module Body: Cast from ductile iron conforming to ASTM A-536, grade 65-45-12 with integral Victaulic grooved ends. Finish: orange enamel.

Shut-off and Test/Drain Valve: Chrome plated brass ball, S 37700 brass clapper, 416SS or 410SS shafts, Delrin orifice, virgin Teflon*, enhanced Teflon and EPDM rubber seals.

*Teflon is a registered trademark of Dupont

Coupling: Any UL Listed, FM Approved Victaulic coupling may also be used. Note: Couplings not included with product.

Waterflow Detector: System Sensor Model WFDTH vane type waterflow detector with sealed retard, visual switch activation, and mechanical delay adjustment. Cover includes tamper resistant security screws and tool. Note: ULC model WFDTHA includes cover tamper switch.

WARRANTY

Refer to the Warranty section of the current Price List or contact Victaulic for details.

NOTE

This product shall be manufactured by Victaulic or to Victaulic specifications. All products to be installed in accordance with current Victaulic installation/assembly instructions. Victaulic reserves the right to change product specifications, designs and standard equipment without notice and without incurring obligations.

WARNING

⚠ WARNING



- **This product must be installed by an experienced, trained installer, in accordance with the instructions provided with each valve. These instructions contain important information.**

Failure to follow these instructions may result in serious personal injury, property damage, or valve leakage.

If you need additional copies of this product literature or the valve installation instructions, or if you have any questions about the safe installation and use of this device, contact Victaulic Company, P.O. Box 31, Easton, PA 18044-0031 USA, Telephone: 001-610-559-3300.

FIELD SET TFM# 21689-A, 21689-B, 21689-C PROJECT# 2025-11-03-04

PLANS AND SPECIFICATIONS ARE REQUIRED TO BE KEPT ON THE JOB SITE UNTIL A FINAL CERTIFICATE OF OCCUPANCY OR PROJECT COMPLETION FORM IS ISSUED BY THIS OFFICE.
No alterations, additions or modifications of any kind are allowed to this approved set without written permission of this office.
TENNESSEE STATE FIRE MARSHAL'S OFFICE

VICTAULIC IS A REGISTERED TRADEMARK OF VICTAULIC COMPANY. © 2024 VICTAULIC COMPANY. ALL RIGHTS RESERVED.

Backflow Preventer

FIELD SET TFM# 21689-A, 21689-B, 21689-C PROJECT# 2025-11-03-04

THESE PLANS AND SPECIFICATIONS ARE REQUIRED TO BE KEPT ON THE JOB SITE UNTIL A FINAL CERTIFICATE OF OCCUPANCY OR PROJECT COMPLETION FORM IS ISSUED BY THIS OFFICE.
No alterations, deletions, additions or modifications of any kind are allowed to this approved set without written permission of this office.
TENNESSEE STATE FIRE MARSHAL'S OFFICE

Engineering Specification

Job Name _____ Contractor _____

Job Location _____ Approval _____

Engineer _____ Contractor's P.O. No. _____

Approval _____ Representative _____

LEAD FREE*

Series C200, C200N

Double Check Valve Assemblies

2½" – 10"

Series C200 and C200N are used to prevent backflow of pollutants, objectionable but not toxic, from entering the potable water supply system. These assemblies may be installed under continuous pressure service and may be subjected to backpressure. Both consist of two independently operating check valves, two shutoff valves, and four test cocks, and are designed for use in non-health hazard applications. The series feature Lead Free* construction to comply with Lead Free* installation requirements. The OS&Y model includes an option for an integrated supervisory switch on each gate valve.

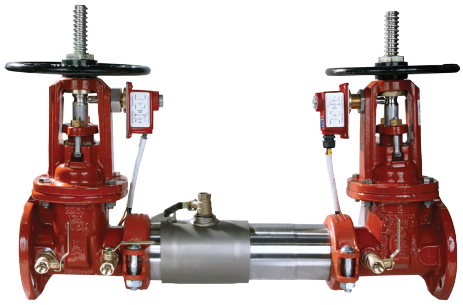

C200-OSY with supervisory switches

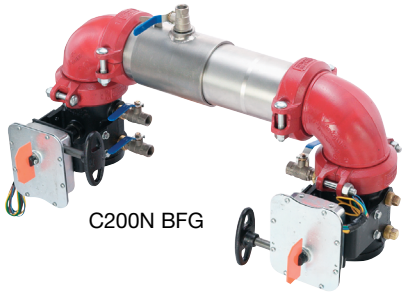

C200N BFG

Features

- Extremely compact design
- 70% Lighter than traditional designs
- 304 (Schedule 40) Stainless steel housing and sleeve
- Groove fittings allow integral pipeline adjustment
- Patented tri-link check provides lowest pressure loss
- Unmatched ease of serviceability
- Available with grooved butterfly valve shutoffs
- Available for horizontal, vertical or N pattern installations
- Replaceable check disc rubber
- Includes an integrated supervisory switch as an option on each gate valve of the OS&Y model

NOTICE

The information contained herein is not intended to replace the full product installation and safety information available or the experience of a trained product installer. You are required to thoroughly read all installation instructions and product safety information before beginning the installation of this product.

Inquire with governing authorities for local installation requirements.

Specification

The Colt C200, C200N Double Check Valve assembly shall consist of two independent Tri-Link Check modules within a single housing, sleeve access port, four test cocks and two drip tight shutoff valves. Tri-Link Checks shall be removable and serviceable, without the use of special tools. The housing shall be constructed of 304 (Schedule 40) stainless steel pipe with groove end connections. Tri-Link checks shall have reversible elastomer discs and in operation shall produce drip tight closure against the reverse flow of liquid caused by backpressure or backsiphonage.

The integrated supervisory tamper switch, an option on the OS&Y model, shall have continuity with the valve fully open and activate within two (2) turns from open. The device consists of two SPDT switches and is designed to send a tamper signal when the valve is closed and when the switch is removed from the valve. In the neutral position, the switch indicates the valve is fully open. Closing the valve causes the switch rod to come out of the valve stem groove, activating the switch. Removing the tamper switch also activates the switch.

The Lead Free* Double Check Valve assembly shall be constructed using Lead Free* materials. It shall comply with state codes and standards, where applicable, requiring reduced lead content. Assembly shall be an Ames Fire & Waterworks Colt C200, C200N.

*The wetted surface of this product contacted by consumable water contains less than 0.25% of lead by weight.

Ames Fire & Waterworks product specifications in U.S. customary units and metric are approximate and are provided for reference only. For precise measurements, please contact Ames Fire & Waterworks Technical Service. Ames Fire & Waterworks reserves the right to change or modify product design, construction, specifications, or materials without prior notice and without incurring any obligation to make such changes and modifications on Ames Fire & Waterworks products previously or subsequently sold.

AMES FIRE & WATERWORKS
A WATTS Brand

FIELD SET TFM# 21689-A, 21689-B, 21689-C PROJECT# 2025-11-03-04

Configurations

- Horizontal
- Vertical up
- “N” pattern horizontal

Materials

Housing & Sleeve	304 (Schedule 40) stainless steel
Elastomers	EPDM, silicone, and Buna ‘N’
Tri-Link Checks	Noryl®, stainless steel
Check Discs	Reversible silicone or EPDM
Test Cocks	Lead Free* bronze body
Pins & Fasteners	300 series stainless steel
Springs	Stainless steel

Model/Option

NRS	Non-rising stem resilient seated gate valves
OSY	UL Classified and FM Approved outside stem and yoke resilient seated gate valves
BFG	UL Classified and FM Approved grooved gear operated butterfly valves with tamper switch
TS-OSY	Integrated supervisory switch (UL Certified, Safety Signaling, Control No. 3L38) on outside stem and yoke resilient seated gate valve
OSY FxG**	Flanged inlet gate connection and grooved outlet gate connection
OSY GxF**	Grooved inlet gate connection and flanged outlet gate connection
OSY GxG**	Grooved inlet gate connection and grooved outlet gate connection

Pressure – Temperature

Temperature Range: 33°F – 140°F (0.5°C – 60°C)

Maximum Working Pressure: 175 psi (12.1 bar)

Dimensions – Weights

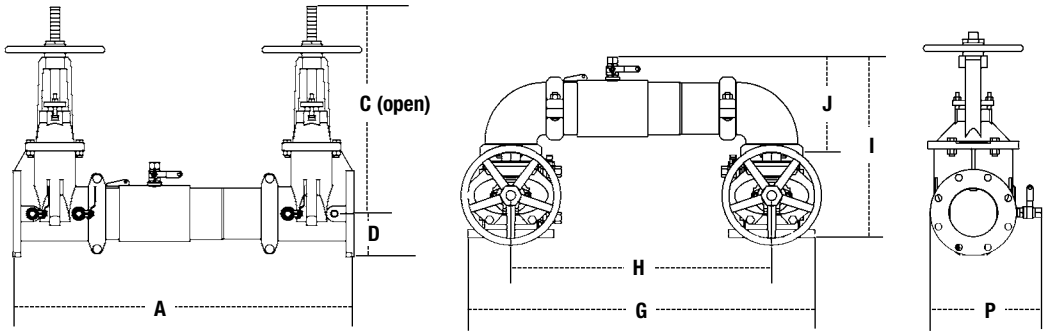

C200, C200N

SIZE	DIMENSIONS																		WEIGHT					
	A		C (OSY)		C (NRS)		D		G		H		I		J		P		C200NRS		C2000SY		C200N NRS	C200N OSY
in.	*in.*	*mm*	*in.*	*mm*	*in.*	*mm*	*in.*	*mm*	*in.*	*mm*	*in.*	*mm*	*in.*	*mm*	*in.*	*mm*	*in.*	*mm*	*lb*	*kg*	*lb*	*kg*	*lb* *kg*	*lb* *kg*
2½	30¾	781	16⅜	416	9⅜	238	3½	89	29¹⁄₁₆	738	21½	546	15½	393	8¹³⁄₁₆	223	9³⁄₁₆	234	115	52	130	59	123 56	138 62
3	31¾	806	18⅞	479	10¼	260	3¹¹⁄₁₆	94	30¼	768	22¼	565	17⅛	435	9³⁄₁₆	233	10½	267	131	59	150	68	144 65	163 74
4	33¾	857	22¾	578	12³⁄₁₆	310	4	102	33	838	23½	597	18½	470	9¹⁵⁄₁₆	252	11³⁄₁₆	284	161	73	166	75	184 83	189 85
6	43½	1105	30⅛	765	16	406	5½	140	44¾	1137	33¼	845	23³⁄₁₆	589	13¹⁄₁₆	332	15	381	273	124	300	136	314 142	341 154
8	49¾	1264	37¾	959	19¹⁵⁄₁₆	506	6¹¹⁄₁₆	170	54⅛	1375	40⅛	1019	27⁷⁄₁₆	697	15¹¹⁄₁₆	399	17³⁄₁₆	437	438	199	485	220	513 233	560 254
10	57¾	1467	45¾	1162	23¹³⁄₁₆	605	8³⁄₁₆	208	66	1676	49½	1257	32½	826	17⁵⁄₁₆	440	20	508	721	327	786	356	891 404	956 433

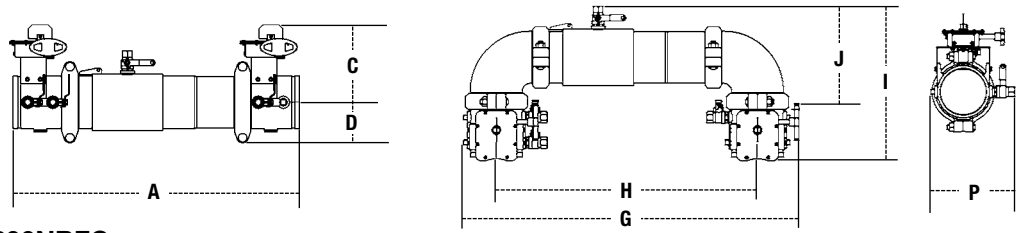

C200BFG, C200NBFG

SIZE	DIMENSIONS														WEIGHT			
	A		C		D		G		H		I		J		P		C200BFG		C200NBFG	
in.	*in.*	*mm*	*in.*	*mm*	*in.*	*mm*	*in.*	*mm*	*in.*	*mm*	*in.*	*mm*	*in.*	*mm*	*in.*	*mm*	*lb*	*kg*	*lb*	*kg*
2½	27¾	705	8	203	3½	89	29⅞	759	21½	546	14¹⁵⁄₁₆	379	8¹³⁄₁₆	223	9	229	56	25	64	29
3	28¼	718	8⁵⁄₁₆	211	3¹¹⁄₁₆	94	30¹¹⁄₁₆	779	22¼	565	15⁷⁄₁₆	392	9³⁄₁₆	233	9½	241	54	24	67	30
4	29	737	8¹⁵⁄₁₆	227	3¹¹⁄₁₆	94	31¹⁵⁄₁₆	811	23½	597	16¼	412	9¹⁵⁄₁₆	252	10	254	61	28	84	38
6	36½	927	10	254	5	127	43³⁄₁₆	1097	33¼	845	19¹¹⁄₁₆	500	13¹⁄₁₆	332	10½	267	117	53	157	71
8	42¾	1086	12¼	311	6½	165	51¹⁄₁₆	1297	40⅛	1019	23⁵⁄₁₆	592	15¹¹⁄₁₆	399	14³⁄₁₆	361	261	118	337	153

Noryl is a registered trademark of SHPP Global Technologies B.V.

** Consult factory for the following: Grooved NRS gate valves, post indicator plate and operating nut, dimensions

THESE PLANS AND SPECIFICATIONS ARE REQUIRED TO BE KEPT ON THE JOB SITE UNTIL A FINAL CERTIFICATE OF OCCUPANCY OR FINAL COMPLETION FORM IS ISSUED BY THIS OFFICE.
No alterations, deletions, additions or modifications of any kind are allowed to this approved set without written permission of this office.
TENNESSEE STATE FIRE MARSHAL'S OFFICE

FIELD SET TFM# 21689-A, 21689-B, 21689-C PROJECT# 2025-11-03-04

Approvals

- Approved by the Foundation for Cross-Connection Control and Hydraulic Research at The University of Southern California (FCCCHR-USC)
- AWWA C510-97

For additional approval information, contact the factory or check Ames Fire & Waterworks at watts.com.

1015 B64.5 (**BFG & OSY Only)

Flow capacity chart identifies valve performance based upon rated water velocity up to 25 fps.

- Service Flow is typically determined by a rated velocity of 7.5 fps based upon Schedule 40 pipe.
- Rated Flow identifies maximum continuous duty performance determined by AWWA.
- UL Flow Rate is 150% of Rated Flow and is not recommended for continuous duty.
- AWWA Manual M22 [Appendix C] recommends that the maximum water velocity in services be not more than 10 fps.

Capacity

UL and FM Certified Flow Characteristics

Flow characteristics collected using butterfly shutoff valves

Horizontal Vertical N-Pattern

2½"

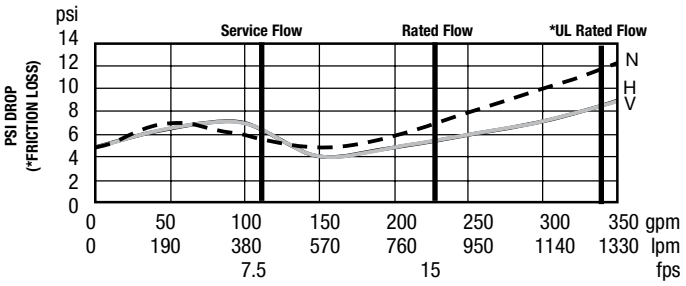

3"

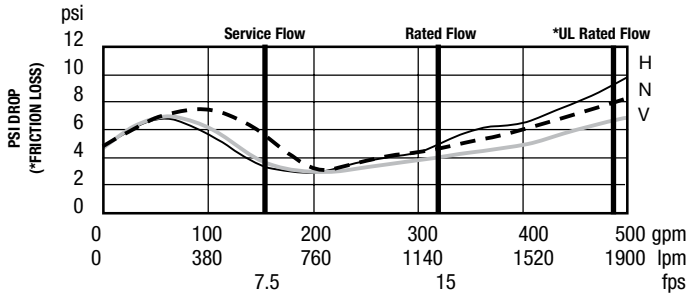

4"

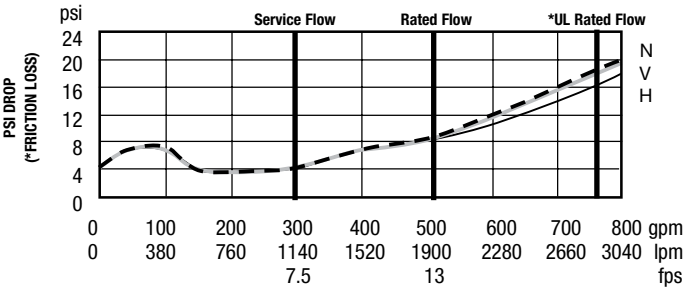

6"

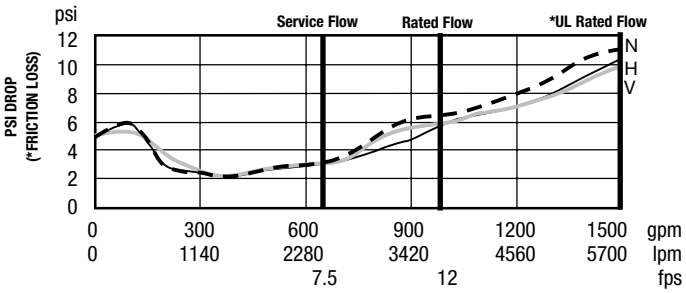

8"

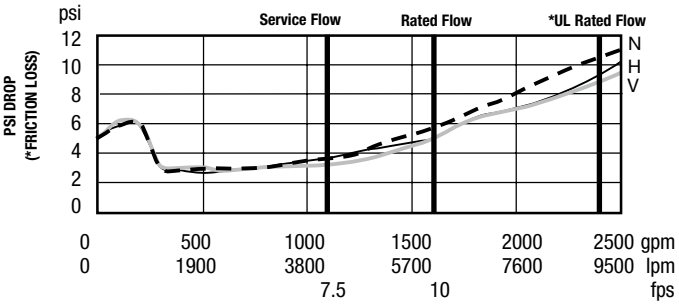

10"

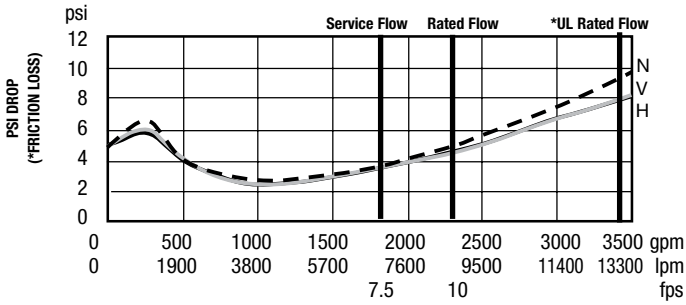

AMES FIRE & WATERWORKS

A **WATTS** *Brand*

USA: Backflow T: (978) 689-6066 • AmesFireWater.com
USA: Control Valves T: (713) 943-0688 • AmesFireWater.com
Canada: T: (888) 208-8927 • AmesFireWater.ca
Latin America: T: (52) 55-4122-0138 • AmesFireWater.com

© 2025 Watts

FIELD SET TFM# 21689-A, 21689-B, 21689-C PROJECT# 2025-11-03-04

Engineering Specification

Job Name _____ Contractor _____

Job Location _____ Approval _____

Engineer _____ Contractor's P.O. No. _____

Approval _____ Representative _____

Series 2000BM1-FP / 2000BM2-FP

Double Check Valve Assemblies

Sizes: 1" – 2"

Series 2000BM1-FP/ 2000BM2-FP Double Check Valve Assemblies shall be installed at referenced cross-connections to prevent the backflow of polluted water into the potable water supply. Only those cross-connections identified by local inspection authorities as non-health hazard shall be allowed the use of an approved double check valve assembly.

Check with local authority having jurisdiction regarding vertical orientation, frequency of testing or other installation requirements.

These valves meet the requirements of ASSE Std. 1015 and AWWA Std. C510 and are approved by the Foundation for Cross-Connection Control and Hydraulic Research at the University of Southern California.

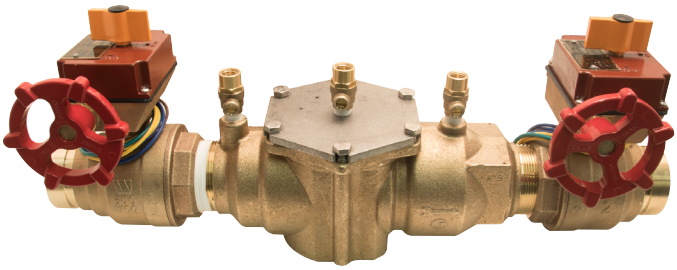

2000BM1-FP-GV
Model shown

Features

- Ease of maintenance with only one cover
- Top entry
- Replaceable seats and seat discs
- Modular construction
- Compact design
- 1" – 2" Cast bronze body construction
- Low pressure drop
- No special tools required
- Gear operated, slow close shutoffs
- Pre-wired tamper switch (2) per shutoff
- Reversible Wiring Harness with Gear-Operated Ball Valves
- GOBV Can be wired Normally Open or Normally Closed

Approvals – Standards

- Approved by the Foundation for Cross-Connection Control and Hydraulic Research at The University of Southern California (FCCCHR-USC)
- Horizontal and Vertical "Flow-Up" approved on all sizes
- ASSE 1015 Listed
- UL Classified (US & Canada)
- IAPMO/cUPC
- AWWA Standard C510 Compliant
- CSA B64.5
- NFPA 13, 14, 15, 16, 20, 22 & 24 Compliant
- End Connections Gear-Operated Ball Valves – National Pipe Thread Taper ANSI/ASME B1.20.1 - Grooved end Table 4 of AWWA C 606-11

1015 1" - 2" B64.5

Available Models

No suffix - Female NPT Inlet/Outlet
GV - Grooved Inlet/Outlet

Pressure — Temperature

Temperature Range: 33°F – 140°F (0.5°C – 60°C)
Maximum Working Pressure: 175psi (12.1 bar)

Specifications

A Double Check Valve Assembly shall be installed at each noted location. The assembly shall consist of two positive seating check modules with captured springs and rubber seat discs. The check module seats and seat discs shall be replaceable. Service of all internal components shall be through a single access cover secured with stainless steel bolts. The assembly shall also include two resilient seated gear operated slow close isolation valves and four resilient seated test cocks. The assembly shall meet the requirements of ASSE Std. 1015 and AWWA Std. C510. Approved by the Foundation for Cross-Connection Control and Hydraulic Research at the University of Southern California. Assembly shall be an Ames Fire & Waterworks Series 2000BM1-FP/ 2000BM2-FP.

⚠ WARNING

It is illegal to use this product in any plumbing system providing water for human consumption, such as drinking or dishwashing, in the United States. Before installing standard material product, consult your local water authority, building and plumbing codes.

Ames Fire & Waterworks product specifications in U.S. customary units and metric are approximate and are provided for reference only. For precise measurements, please contact Ames Fire & Waterworks Technical Service. Ames Fire & Waterworks reserves the right to change or modify product design, construction, specifications, or materials without prior notice and without incurring any obligation to make such changes and modifications on Ames Fire & Waterworks products previously or subsequently sold.

AMES FIRE & WATERWORKS
A WATTS Brand

FIELD SET TFM# 21689-A, 21689-B, 21689-C PROJECT# 2025-11-03-04

Dimensions – Weights

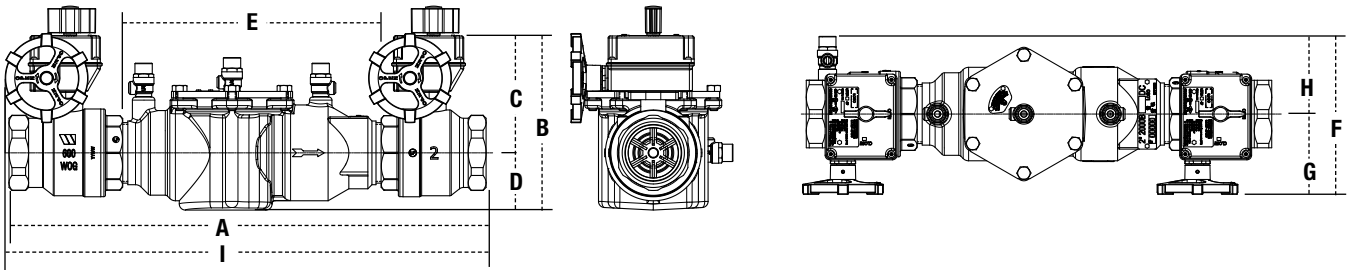

MODEL	SIZE	DIMENSIONS																				WEIGHT	
		A				B		C		D		E		F		G		H		I			
		FNPT		GROOVED																			
	in.	in.	mm	in.	mm	in.	mm	in.	mm	in.	mm	in.	mm	in.	mm	in.	mm	in.	mm	in.	mm	lbs.	kgs.
2000BM1-FP	1	13¼	337	13½	343	4½	114	3½	89	1	25	7½	191	5¾	146	2⅞	73	2⅞	73	14⅜	365	12.2	5.5
2000BM2-FP	1¼	15⅝	397	16	406	5⅜	136	3¾	95	1⅝	41	9½	241	6 1/16	154	2⅞	73	3 3/16	81	16½	419	17.3	7.8
2000BM2-FP	1½	16⅜	416	16½	419	5⅝	143	4	102	1⅝	41	9¾	248	6¼	159	2⅞	73	3⅜	86	17	432	19	8.6
2000BM1-FP	2	19⅛	486	19⅔	500	6½	165	4¼	108	2¼	54	13⅜	340	6½	165	2⅞	73	3⅝	92	19½	495	26.4	12

Strainer sold separately

Capacities

As compiled from documented Foundation for Cross-Connection Control and Hydraulic Research at the University of Southern California lab tests.
*Typical maximum system flow rate (7.5 feet/sec., 2.3 meters/sec.)

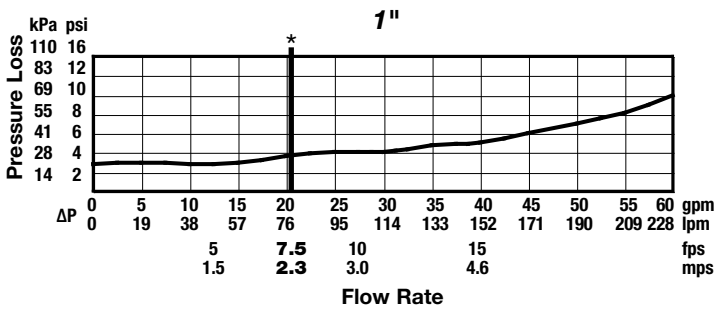

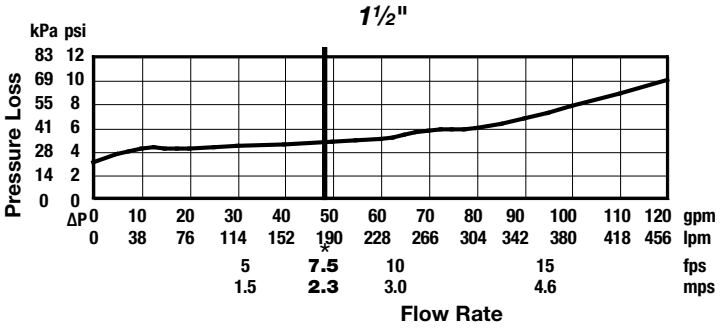

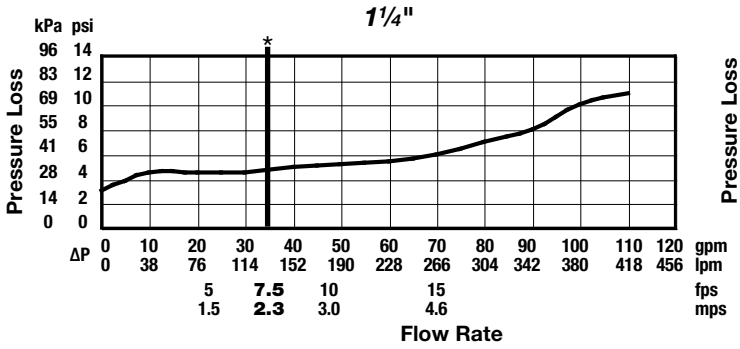

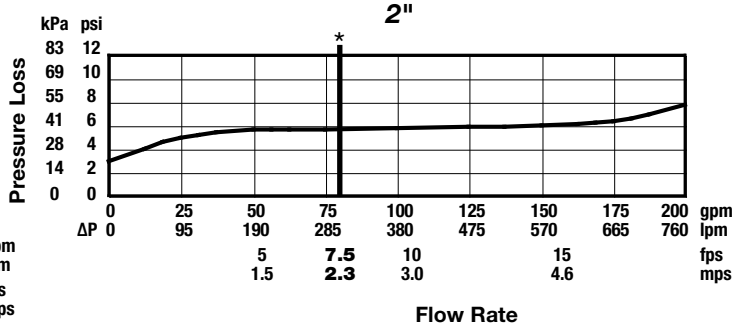

NOTICE

Inquire with governing authorities for local installation requirements

NOTICE

The information contained herein is not intended to replace the full product installation and safety information available or the experience of a trained product installer. You are required to thoroughly read all installation instructions and product safety information before beginning the installation of this product.

AMES FIRE & WATERWORKS

A **WATTS** *Brand*

USA: Backflow T: (978) 689-6066 • AmesFireWater.com
USA: Control Valves T: (713) 943-0688 • AmesFireWater.com
Canada: T: (888) 208-8927 • AmesFireWater.ca
Latin America: T: (52) 55-4122-0138 • AmesFireWater.com

© 2025 Watts

FIELD SET TFM# 21689-A, 21689-B, 21689-C PROJECT# 2025-11-03-04

UnderGroud Material

FIELD SET TFM# 21689-A, 21689-B, 21689-C PROJECT# 2025-11-03-04

THESE PLANS AND SPECIFICATIONS ARE REQUIRED TO BE KEPT ON THE JOB SITE UNTIL A FINAL CERTIFICATE OF OCCUPANCY OR PROJECT COMPLETION FORM IS ISSUED BY THIS OFFICE.

No alterations, deletions, additions or modifications of any kind are allowed to this approved set without written permission of this office.

TENNESSEE STATE FIRE MARSHAL'S OFFICE

SUPER CENTURION FIRE HYDRANT

Product Specifications

1. GENERAL CLASSIFICATION

1.1 MUELLER SUPER CENTURION Hydrants are suitable for general waterworks service.

1.2 MUELLER SUPER CENTURION Hydrants are dry barrel, post type with compression main valve closing with the inlet pressure.

1.3 MUELLER MODERN CENTURION Hydrants have a replaceable Stem Coupling and Traffic Flange at the ground line.

1.4 MUELLER SUPER CENTURION Hydrants are UL 246 Listed, FM 1510 Approved, comply with AWWA Standard C502 and UL Water Quality certified to ANSI/NSF 61/372.

2. SELECTIVE SPECIFICATIONS (TO BE SELECTED BY CUSTOMER)

2.1 **Size of Hydrant** – 4½″ or 5¼″ (hydrants are sized by seat ring internal diameter).

2.2 **Size and type of inlet connections:**

2.2.1 **Standard Mechanical Joint** – Dimensions comply with ANSI/AWWA C111/A21.11. Furnished with integral anti-rotational pads on all bolt holes (allowing use of standard tee-head bolts), and with two strapping lugs. 6 & 8″ size (4″ available on AWWA hydrants).

2.2.2 **D-150 Mechanical Joint** – With two specially designed gaskets to fit either of two diameters of Cast Iron or Ductile Iron pipe: duck-tipped rubber gasket for Class 150 pipe or plain rubber gasket for Class D pit cast pipe. 6″ sizes (4″ available on AWWA hydrants).

2.2.3 **Hymax Grip® Restraint** – Certified to ANSI/NSF 61 & 372. Meets or exceeds all applicable requirements of ANSI/AWWA C502 Standard to the working pressure of 250 PSIG and requirements of ANSI/AWWA C550 Standard. Use on Cast Iron, C151 Ductile Iron , C909 PVC DIPS (DR14 & DR18), D2241 PVC IPS (SDR17 & SDR21), C906 HDPE IPS & DIPS (SDR9, SDR11, SDR13.5, & SDR17). 6” size

2.2.4 **Flange** – Horizontal or vertical in relation to hydrant barrel - American Standard complying to ANSI B16.1 Class 125 (ISO PN10/PN16 drilling optional). 6″ size (4″ available on AWWA hydrants).

For more information about us, or to view our full line of products, please visit www.mueller-international.com or call International Customer Service at:

UK: +44.1438.487410 Dubai: +971.4.214.6640 Singapore: +65.6816.3088 USA: +1 800.423.1323 International@muellerwp.com

Mueller refers to one or more of Mueller Water Products, Inc., a Delaware corporation (“MWP”), and its subsidiaries. MWP and each of its subsidiaries are legally separate and independent entities when providing products and services. MWP does not provide products or services to third parties. MWP and each of its subsidiaries are liable only for their own acts and omissions and not those of each other. MWP brands include Mueller®, Echologics®, Hydro Gate®, Hydro-Guard®, HYMAX®, i2O®, Jones®, Krausz®, Mi.Net®, Milliken®, Pratt®, Pratt Industrial®, Sentryx™, Singer®, and U.S. Pipe Valve & Hydrant. Please see muellerwp.com/brands to learn more.

© 2022 Mueller Water Products, Inc. All Rights Reserved. The trademarks, logos and service marks displayed in this document are the property of Mueller Water Products, Inc., its affiliates or other third parties. Products above marked with a section symbol (§) are subject to patents or patent applications. For details visit www.mwppat.com.

F 14335 12/22

FIELD SET TENN# 216995A 216996 216997 PROJECT 2025 11/05/24

MUELLER

FIELD PLANS AND SPECIFICATIONS ARE REQUIRED TO BE KEPT ON THE CONSTRUCTION SITE UNTIL A FINAL CERTIFICATE OF OCCUPANCY OR PROJECT COMPLETION FORM IS ISSUED BY THE FIRE OFFICE.

No alterations, additions or modifications are allowed to this approved set without written permission from the fire office.

TENNESSEE STATE FIRE MARSHAL'S OFFICE

2.2.5 **Slip-On Joint*** – Complete with Mueller Slip-On Gasket, complies with ANSI/AWWA C111/A21.11. Fits Ductile Iron pipe manufactured to ANSI/AWWA C151/ A21.51; including the plain end of all makes of Cast Iron or Ductile Iron of the slip connection type. Also fits Classes 150 and 200 Ductile Iron O.D. PVC plastic pipe.** 6″ size (4″ available on AWWA hydrants).

2.3 **Operating nut and nozzle cap nut** – Shape and dimension according to customer selection.

2.2 **Opening direction** – Open left (counterclockwise) or right (clockwise). Arrow on weather cap indicates opening direction.

2.4 **Nozzle arrangement** – Furnished 3-way with 2 hose nozzles 180 degrees apart, 1 pumper in between and on the same horizontal plane.

2.5.1 **Hose nozzle threading** – Regularly furnished with 2½″ National Standard Hose Thread. Other 2½″ or 3″ hose threads to customer specifications.

2.5.2 **D-150 Mechanical Joint** – With two specially designed gaskets to fit either of two diameters of Cast Iron or Ductile Iron pipe: duck-tipped rubber gasket for Class 150 pipe or plain rubber gasket for Class D pit cast pipe. 6″ sizes (4″ available on AWWA hydrants).

* Design and dimensions of the joint are manufactured under license of U.S. Pipe and Foundry Company.

** When using DI O.D. PVC pipe, the gaskets supplied by Mueller must be used with this hydrant connection.

3. WORKING AND TEST PRESSURES

3.1 MUELLER SUPER CENTURION standard working pressure is 350 psi (model number ends in HP). Hydrants with AquaGrip Shoes or Storz Nozzles are rated for 250 psi.

3.2 MUELLER SUPER CENTURION Hydrants are subjected to two hydrostatic tests per AWWA C502 Standard.

3.3.1 **Seat Test** – shoe pressurized with main valve closed.

3.2.1.1 350 psi rated hydrants are tested at 700 psi

3.2.1.2 250 psi rated hydrants are tested at 500 psi

3.3.2 **Shell Test** – entire hydrant pressurized main valve open

3.2.2.1 350 psi rated hydrants are tested at 700 psi

3.2.2.2 250 psi rated hydrants are tested at 500 psi

During the above tests, no indication of leakage is permitted through castings, joints, main valve, or stem packing. Drain valve leakage cannot exceed five fluid ounces per minute.

4. DESIGN FEATURES

4.1 **Bonnet assembly** – Dry top, factory lubricated. Oil Level checked by removing the oil filter plug on outside of bonnet. Cannot be overfilled with oil.

4.2 **Upper operating system** – Bronze encased for O-ring stem seal surface contact.

4.3 **Nozzles** – Interchangeable, threaded in place and retained by stainless steel locks.

MUELLER

4.4 **Nozzle caps** – Attached to upper barrel with individual non-kinking chains.

4.5 **Lower barrel flange** – Concealed for improved appearance.

4.6 **Interchangeable design** – permits the upper barrel assembly to be used with existing Mueller Improved or 107 Hydrants. (For 107 hydrants, use upper barrel assembly with stop-in-bonnet option.)

4.7 **Traffic flange** – breaks cleanly upon impact, yet strong enough for normal handling, shipping, and use. Permits full 360-degree rotation of upper barrel to position nozzles in any desired direction. Extension sections or upper barrel with different nozzle size or arrangement can easily be added. Full size un-notched steel bolts used to retain traffic flange and connect the upper and lower barrels.

4.8 **Stem coupling** – Stainless steel, connects the upper and lower stems and is retained with stainless steel clevis pins and removable clips. When traffic damage occurs, the coupling breaks cleanly, flush with the lower stem. Lower stem retains bottom clevis and clip with no loose parts to fall into hydrant barrel. Upper end of lower stem is located below lower barrel flange surface to prevent it from being held open by vehicle wheel after traffic damage.

4.9 **Lower barrel** – Heavy wall sections where flange joins the barrel section for added strength.

4.10 **Shoe** – Has lugs for strapping anchors on Mechanical Joint, D-150 and Slip-On Joint ends. Bottom has a support pad and side opposite inlet has a backing support pad.

4.11 **Seat ring** – Bronze ring threads into a bronze drain ring, which has two drain holes to provide an all bronze drain way.

4.12 **Double drain valves (with replaceable polymer drain valve facings)** – operate automatically to force-flush the drain way each time the hydrant is opened or closed. No toggles, springs or adjustable mechanisms are required and the drain valve facings can be replaced when seat ring and main valve assembly is removed.

4.13 **Main valve** – Encapsulated molded rubber, reversible, compression type, closes with inlet pressure and remains closed during any above ground repairs or changes to upper barrel or bonnet assemblies.

4.14 **Main valve opening** – Controlled by lug in bottom of shoe. Stop in bonnet also available.

4.15 **Main valve and seat ring** – Removable from above ground with seat removal wrench.

4.16 **Lower stem end threads** – Covered with an epoxy coated iron cap nut and sealed with rubber washer to protect them from corrosion. The cap nut is retained with a stainless steel lock washer.

4.17 **Shoe and upper valve plate design** – Permits maximum flow by minimizing friction loss.

4.18 **Shoe interior, lower valve plate and cap nut** – Epoxy Coating to resist corrosion.

FIELD SET TKW 21999A, 21999S, 21999C PROJECT 20251 LW5104

PLANS AND SPECIFICATIONS ARE REQUIRED TO BE KEPT ON THE JOB SITE UNTIL A FINAL CERTIFICATE OF OCCUPANCY OR PROJECT COMPLETION FORM IS ISSUED BY THE BUILDING OFFICE.
No alterations, additions or modifications are allowed to this approved set without written permission from this office.
TENNESSEE STATE FIRE MARSHAL'S OFFICE

5. MATERIAL SPECIFICATIONS

5.1 **Bonnet, nozzle caps, barrels, traffic flange, drain ring housing, lower valve plate, & cap nut** – Cast Iron, ASTM A-126, Grade B

5.1.1 **4 & 6″ Mechanical Joint, 4 & 6″ D-150, 6″ Flanged & AquaGrip® Shoe** – Ductile Iron, ASTM A-536.

5.1.2 **4″ Flanged, 8″ Mechanical Joint and Slip-On Shoes** – Gray Iron, ASTM A-126, Grade B

5.2 **Operating nut, hold down nut, nozzles, upper valve plate, seat ring and drain ring** – Bronze. Complies with AWWA Standard C502.

5.3 **Oil filler plug** – Brass, ASTM B-16, half hard.

5.4 **O-ring seals** – Buna N, ASTM D2000.

5.5 **Weather seal** – EPDM, ASTM D2000.

5.6 **Anti-friction washer** – Thermoplastic polymer with high resistance to dynamic and static wear.

5.7 **Bolts for bonnet, traffic flange, shoe and drain ring housing** – Steel, Electrogalvanized – SAE J429 High Strength.

5.8 **Cap chains** – Steel, Electrogalvanized.

5.9 **Upper and lower stems** – Steel, ASTM A-576, e-coated or FBE coated.

5.10 **Stem pin** – Stainless Steel, ASTM A-276, Type 302.

5.11 **Drain valve facing screws** – Stainless Steel, ASTM A-276, Type 305.

5.12 **Nozzle locks** – Stainless Steel, ASTM A-276, Type 410.

5.13 **O-rings for bonnet and barrel flanges** – Buna N, ASTM D2000.

5.14 **O-ring for drain ring housing flange** – Buna N, ASTM D2000.

5.15 **Gaskets for nozzle caps** – Neoprene, ASTM D2000.

5.16 **Stem coupling** – Stainless Steel, ASTM A-890.

5.17 **Stem coupling clevis pins** – Stainless Steel, ASTM A-276 Type 305.

5.18 **Stem coupling clips** – Stainless Steel, ASTM A-276 Type 302.

5.19 **Drain valve facings** – resilient precision molded thermoplastic with unique sealing characteristics.

5.20 **Reversible main valve** – Encapsulated molded rubber, ASTM D2000.

5.21 **Drain Ring Housing** – Cast Iron ASTM A-126, Class B and e-coated.

5.22 **Lower valve plate** – Cast Iron ASTM A-126, Class B and coated with high performance 2-part epoxy, NSF61 listed and AWWA C550 complaint.

MUELLER

5.23 **Lock washer** – Stainless Steel, ASTM A-276 Type 304.

5.24 **Cap nut** – Cast Iron ASTM A-126 Class B coated with high performance 2-part epoxy, NSF61 listed and AWWA C550 complaint.

5.25 **Cap nut seal** – Rubber, ASTM D2000.

5.26 **Shoe coating** – Interior and exterior coated with high performance 2-part epoxy. NSF61 listed and AWWA C550 compliant.

5.27 **Paint** – Interior and exterior above and below ground line coated with high performance 2-part epoxy. Exterior above ground line – one coat UV resistant high gloss 2-part polyurethane enamel, color as specified.

SUPER CENTURION FIRE HYDRANTS

	PRESSURE RATING		MAIN VALVE		NOZZLES		LISTINGS	
	250 PSI	350 PSI	4½"	5¼"	Pumper	Hose	UL	FM
MODEL	A421	A421HP	•		1	2	•	•
	A421/HS		•		1	2		•
	A423	A423HP		•	1	2	•	•
	A423/HS			•	1	2		•
	A424	A424HP	•		1	0		•
	A425 *	A425HP *		•	2	0	•	
	A433	A433HP	•		0	2	•	•
	A435	A435HP		•	0	2	•	•
	A454 *	A454HP *		•	0	3	•	•
	A455 *	A455HP *		•	0	4	•	•
	A458 *	A458HP *		•	1	3	•	•
	A459 *	A459HP *		•	2	2	•	
	A461	A461HP	•		1	2	•	•
	A473	A473HP		•	1	2	•	•
	A477			•	1	0		
	A479	A479HP		•	1	2	•	•

FIELD SET
TENNESSEE STATE FIRE MARSHAL'S OFFICE

A2361 RESILIENT WEDGE GATE VALVES, 350 PSI

Product Specifications

1. GENERAL CLASSIFICATION

1.1 Mueller Resilient Wedge Gate Valves comply with ANSI/AWWA C515.

1.2 Mueller Resilient Wedge Gate Valves are approved by Factory Mutual Research Corporation (FM).

1.3 Mueller Resilient Wedge Gate Valves are listed by Underwriters Laboratories, Inc. (UL). Valves with actuators are not listed.

1.4 Mueller Resilient Wedge Gate Valves are tested and certified to ANSI/NSF Standard 61 &/or 372.

1.5 Mueller Resilient Wedge Gate Valves are suitable for potable water applications.

1.6 Mueller Resilient Wedge Gate Valves are iron body, fully encapsulated resilient wedge type.

1.7 Mueller Resilient Wedge Gate Valves are manufactured in the U.S.A. at an ISO9001 Certified factory.

2. SIZE RANGE, WORKING TEMPERATURE & WORKING PRESSURE

2.1 **Sizes:** 3" to 12".

2.2 **Working Temperature:** 33°F minimum to 170°F maximum working temperature.

2.3 **Working Pressure:** 350 psi for AWWA, UL and FM.

3. TYPE OF VALVE

3.1 Resilient Wedge Gate Valves are non-rising stem type.

3.2 NRS Resilient Wedge Gate Valves feature O-ring stem seals.

3.3 Resilient Wedge Gate Valves are available to either open left or open right.

3.4 Resilient Wedge Gate Valves have a 2" square wrench nut complying with AWWA C515.
Optional hand wheels are available.

For more information about Mueller or to view our full line of water products, please visit www.muellerwp.com or call Mueller customer service at 1.800.423.1323.

Mueller refers to one or more of Mueller Water Products, Inc. a Delaware corporation ("MWP"), and its subsidiaries. MWP and each of its subsidiaries are legally separate and independent entities when providing products and services. MWP does not provide products or services to third parties. MWP and each of its subsidiaries are liable only for their own acts and omissions and not those of each other. MWP brands include Mueller®, Echologics®, Hydro Gate®, Hydro-Guard®, i2O®, Jones®, Krausz®, Mi.Net®, Milliken®, Pratt®, Pratt Industrial®, Singer®, Sentryx™, and U.S. Pipe Valve & Hydrant. Please see muellerwp.com/brands to learn more.

© 2025 Mueller Water Products, Inc. All Rights Reserved. The trademarks, logos and service marks displayed in this document are the property of Mueller Water Products, Inc., its affiliates or other third parties. Products above marked with a section symbol (§) are subject to patents or patent applications. For details visit www.mwppat.com.

F 12933 9/52

THESE PLANS AND SPECIFICATIONS ARE REQUIRED TO BE KEPT ON THE JOB SITE UNTIL A FINAL CERTIFICATE OF OCCUPANCY OR PROJECT COMPLETION FORM IS ISSUED BY THIS OFFICE.
No alterations, deletions, additions or modifications of any kind are allowed to this approved set without written permission of this office.
TENNNESSEE STATE FIRE MARSHAL'S OFFICE

PROJECT NUMBER: 2160-0-2160-0 PROJECT NAME: FMWP

3.5 **Resilient Wedge Gate Valves are offered with the following end connections:**

3.5.1 **Flanged Ends** with flange drilling complying to ASME B16.1 Class 125 (ISO PN10 / PN16 drilling optional). Per ANSI/AWWA C111, working pressure above 250 psi requires the use of a special gasket rated for the higher pressure.

3.5.2 **Mechanical Joint Ends** complying with ANSI/AWWA C111/A21.11.

3.6 **Resilient Wedge Tapping valves are offered with the following end connections:**

3.6.1 Inlet flange machined specifically for mating with Tapping Sleeves and Crosses. Raised ring on flange face complies with MSS SP-60. Drilling complies with ASME B16.1 Class 125 flange.

3.6.2 Standard Mechanical Joint outlet connection complies with ANSI/AWWA C111/A21.11 and is precision machined for proper alignment of Mueller Drilling Machines.

4. MATERIAL SPECIFICATIONS

4.1 **Cap screw** - Stainless Steel Type 316.

4.2 **Wrench nut** – Ductile Iron, ASTM A-536.

4.3 **Handwheel** – Cast Iron, ASTM A-126, Class B.

4.4 **Stuffing box** – Ductile Iron, ASTM A-536.

4.5 **Stem O-rings** – Nitrile, ASTM D2000.

4.6 **Anti-friction washers** – Acetal.

4.7 **Stem** – Manganese Bronze, CDA Alloy C67600.

4.8 **Bonnet** – Ductile Iron, ASTM A-536.

4.9 **Bonnet seal** – O-ring, Nitrile, ASTM D2000.

4.10 **Stuffing box bolts & nuts** – Stainless Steel Type 316.

4.11 **Bonnet bolts & nuts** – Stainless Steel Type 316.

4.12 **Disc nut** – Bronze, ASTM B-584 Alloy.

4.13 **Guide cap bearings** – Acetal.

4.14 **Disc** –3" - 12" Ductile Iron, ASTM A-536.

4.15 **Disc encapsulated** – SBR ASTM D2000.

4.16 **Body** – Ductile Iron, ASTM A-536.

4.17 **Coating** – Inside and outside of valve fully coated Mueller PRO-GARD Fusion Bonded Epoxy - coating complies with ANSI/AWWA C550 and valve is certified to ANSI/NSF Standard 61 &/or 372.

FIELD SET TEMP 21999A 21999B 21999C PROJECT #2251U0504

PLANS AND SPECIFICATIONS TO BE KEPT ON THE JOB SITE AT ALL TIMES. CONSTRUCTION FINAL CERTIFICATE OF OCCUPANCY OR PROJECT COMPLETION FORM IS ISSUED BY THIS OFFICE.

No alterations, deletions, additions or modifications of any kind are allowed to this approved set without written permission of this office.

TENNESSEE STATE FIRE MARSHAL'S OFFICE

5. DESIGN FEATURES

5.1 **Flow Way** – Fully unobstructed, oversized flow-way. The sealing mechanism is withdrawn from the flow-way in a full open position. No pockets in bottom of flow-way to trap sediment or debris. The flow-way will permit passage of full-sized shell cutters.

5.2 **Bronze Disc Nut** – On all valves.

5.3 **Anti-Friction Washers** on non-rising stem valves – Located above and below the thrust collar portion of the stem to reduce friction and provide more effective conversion of operating torques into seating loads.

5.4 **Stem** for non-rising stem valves, with O-ring Seals – One O-ring is located below the thrust collar of the stem and two are located above the thrust collar, the upper most serving as a dirt seal. The O-rings and thrust collar are factory lubricated. The two primary O-rings seal the thrust collar area from outside contaminants and water, and retain an ample amount of lubricant on the thrust collar and anti-friction washers to reduce operating torque and wear.

5.5 **Stem** – The threads on the bronze stem are Acme form threads for strength and efficiency. The stem thrust collar is made integral with the stem – and is formed by a heat upset operation.

5.6 **Upper Stem O-ring Replacement** – The two O-rings above the thrust collar of all Mueller Resilient Wedge Gate Valves can be replaced with the valve in the fully open position, under pressure, with no leakage.

5.7 **Corrosion Resistance** – All inside and outside cast iron surfaces are coated with Mueller PRO-GARD® Epoxy Coating, 10 mils nominal. Mueller PRO-GARD Epoxy Coating is non-toxic and imparts no taste to water. Valves comply with ANSI/AWWA C550 and are certified to ANSI/NSF Standard 61 &/or 372.

6. OPTIONAL FEATURES

6.1 Mueller A-2361 350 psi Resilient Wedge Gate Valves can be furnished with the following optional designs or features:

6.1.1 **Gearing** – Bevel and Spur gearing available. Bevel geared valves are for horizontal installations; spur geared for vertical. Geared valves provide an additional bearing to support the extreme end of the stem.

6.1.2 **Position Indicator** – Available for NRS valves 3" and larger.

6.1.3 **Stem** – Silicon bronze - ASTM B98 C66100; 304 Stainless Steel or 316 Stainless Steel.

6.1.4 **Disc Encapsulation and O-rings** – EPDM ASTM D2000.

7. TEST PRESSURE

7.1 The pressure test on each Mueller Resilient Wedge Gate Valve meets the requirements of AWWA Standard C515 for Resilient Seated Valves.

7.1.1 Each Mueller Resilient Wedge Gate Valve is subjected to two pressure tests. The seat test is at the working pressure of AWWA valves and 1 ½ times working pressure of UL Listed valves. Shell tests are at two times the working pressure.

7.1.2 Pressure tests at the working pressure shall show NO leakage past the seat from either side of the wedge or at the flange joints. Pressure tests at twice the working pressure shall show NO leakage through the metal or flange joints.

7.1.3 Test pressures are as follows: 525 psi seat test, 700 psi shell test.

FIELD SET TEMP 21999A 21999B 21999C PROJECT 20251 UPDATE

PLANS AND SPECIFICATIONS SHALL BE KEPT ON THE JOB SITE AT ALL TIMES. FINAL CERTIFICATE OF OCCUPANCY OR PROJECT COMPLETION FORM IS ISSUED BY THIS OFFICE.
No alterations, deletions, additions or modifications of any kind are allowed to this approved set without written permission of this office.
TENNESSEE STATE FIRE MARSHAL'S OFFICE

LANSDALE® VALVE
MANUFACTURING CORP.

POST INDICATOR VALVE WITH FLANGE ENDS

MODEL - LVPIVFF, LVPIVMJMJ



*Flanged ends shown, LVPIVFF. Available with Mechanical Joint (MJ) ends. Model # LVPIVMJMJ

DESCRIPTION:

- Valves comply with AWWA C515-15 Standard
- Non-Rising Stem, resilient seated (EDPM encapsulated wedge)
- Triple O-Ring Seal
- Available with optional test plug on valve body (special order)
- Post Indicator Valves provided with universal "Indicator Post Plate"
- Mechanical Joint Ends to AWWA C153/A21.53
- Flanged Ends to ANSI B16.1, CLASS 125
- UL/Listed/FM Approved at 300 PSI water working pressure rating
- NSF/ANSI/CAN 61 certified as lead-free for use in drinking water systems
- Temperature range: 42º-180º F
- Fusion bonded epoxy coated interior and exterior to AWWA C550 standard
- Flanged Valves available with hand wheel or operating nut

MATERIAL SPECIFICATIONS		
PART	**MATERIAL**	**ASTM SPEC.**
Body	Ductile Iron	A536 65-45-12
Wedge	Ductile Iron	EPDM Encapsulated
Wedge Nut	Bronze	B62 C83600
Stem	Stainless Steel	ISI 304
Bonnet	Ductile Iron	A536 65-45-12
Gasket	Rubber	EPDM
Gland	Ductile Iron	A536 65-45-12
Thrust Collar	Bronze	B62 C83600
O-Ring	Rubber	EPDM
Post Flange	Ductile Iron	A536 65-45-12
Operating Nut	Ductile Iron	A536 65-45-12
NPT Plug	Bronze	Commercial
Post Flange	Bolt	Stainless Steel AISI 316
Bonnet Bolt	Stainless Steel	AISI 304

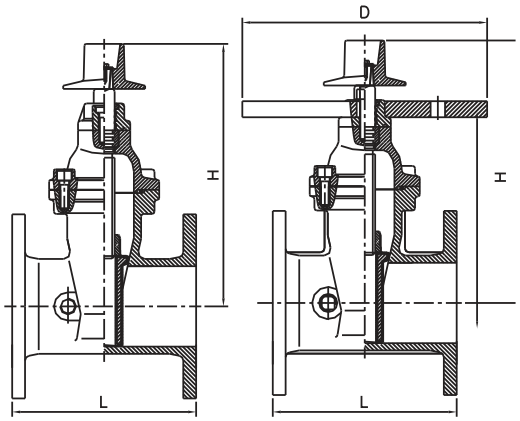

Size 2.5" & 3" Size 4" to 12"

VALVE DIMENSIONS							
Size (in.)	3	4	5	6	8	10	12
L (in.)	8	9	10	10-1/2	11-1/2	13	14
H (in.)	11-5/8	13-3/4	16-1/8	17-5/16	21-7/16	25-5/8	28-3/4
D (in.)		12	12	12	12	12	12
Weight (lbs.)	41	64	79	103	161	235	339

PROJECT	APPROVAL STAMP
PROJECT:	☐ APPROVED
ADDRESS:	☐ APPROVED AS NOTED
ENGINEER:	☐ NOT APPROVED
SUBMITTAL DATA:	REMARKS:
NOTES 1:	
NOTES 2:	

www.LansdaleValve.com

Revision: 11/2024

FIELD SET TFM# 21689-A, 21689-B, 21689-C PROJECT# 2025-11-03-04

THESE PLANS AND SPECIFICATIONS ARE REQUIRED TO BE KEPT ON THE JOB SITE UNTIL A FINAL CERTIFICATE OF OCCUPANCY OR PROJECT COMPLETION FORM IS ISSUED BY THIS OFFICE.
No alterations, deletions, additions or modifications of any kind are allowed to this approved set without written permission of this office.
TENNESSEE STATE FIRE MARSHAL'S OFFICE

LANSDALE® VALVE
MANUFACTURING CORP.

ADJUSTABLE VERTICAL INDICATOR POST

MODEL LVVIP

c UL us LISTED FM APPROVED

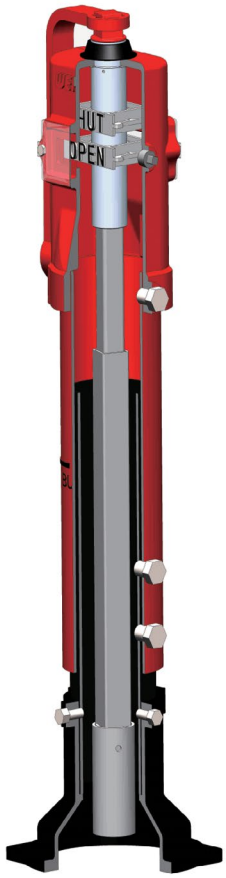

FEATURES:

- Meet or Exceed the Requirements of NFPA 24 Standard
- Indicates the State of the Valve OPEN or SHUT Position
- Target Nut to allow 13 to 45 Turns
- "L" Shaped Wrench Handle fitted with a Secure Padlock (provided by user).
- Protected Windows
- Telescoping Operating Rod
- Easily Adjustable Indicator OPEN and SHUT Targets
- UL/ULC 789 Listed and FM1110 Approved

CORROSION PROTECTION:

- Spray Painted Interior and Exterior meet or exceed all applicable of AWWA C550 Standard.
- Stand Barrel: Black Bitumen Coated

FIELD ADJUSTMENTS:

- Remove the post head to adjust OPEN and SHUT signs as required.
- Adjust telescoping rod and pipe to desired length.
- Re-attach the post to the post flange on the valve

FIELD SET TFM# 21689-A, 21689-B, 21689-C PROJECT# 2025-11-03-04

THESE PLANS AND SPECIFICATIONS ARE REQUIRED TO BE KEPT ON THE JOB SITE UNTIL A FINAL CERTIFICATE OF OCCUPANCY OR PROJECT COMPLETION FORM IS ISSUED BY THIS OFFICE.
No alterations, deletions, additions or modifications of any kind are allowed to this approved set without written permission of this office.
TENNESSEE STATE FIRE MARSHAL'S OFFICE

Revision: 6/2022

LANSDALE® VALVE MANUFACTURING CORP.

ADJUSTABLE VERTICAL INDICATOR POST

MODEL LVVIP

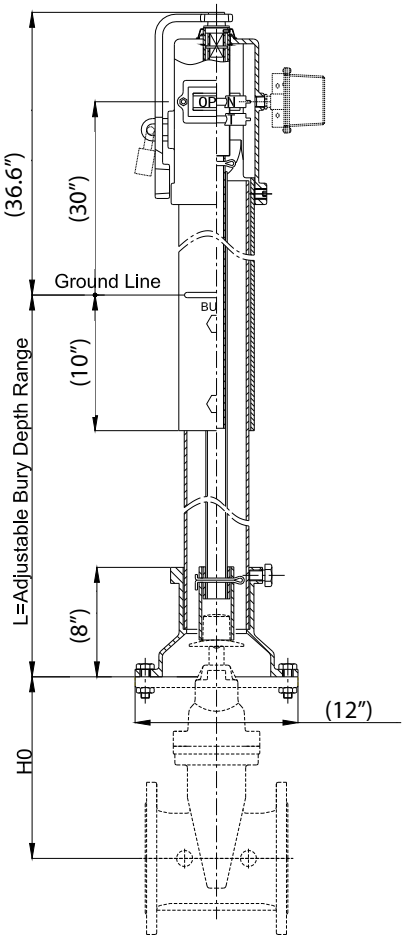

SIZES 4" TO 14"

MATERIAL SPECIFICATIONS		
PART	**MATERIAL**	**ASTM SPECIFICATION**
Post Head	Gray Cast Iron	A126 Class B
Operating Wrench	Ductile Iron	A536 Grade 65-45-12
Retaining Ring	Stainless Steel	A276 Type 304
Weather Cap	Polyethylene	Commercial
Threaded Sleeve	Stainless Steel	A276 Type 304
Pipe Plug	Malleable Iron	A47 Grade 22010
Target Plate	Aluminum Alloy	ASTM B26
Screw	Carbon Steel	A105
Target Plate	Aluminum Alloy	ASTM B26
Windows	Plexiglass	Commercial
Gasket	Rubber	D2000 NBR
Upper Barrel	Carbon Steel	A53 Type S Grade B
Lower Barrel	Carbon Steel	A53 Type S Grade B
Upper Rod	Carbon Steel	A53 Type S Grade B
Lower Rod	Carbon Steel	A53 Type S Grade B
Base Flange	Cast Iron	A126 Class B
Locking Bolts	Carbon Steel	A307 Grade B
Locking Nuts	Carbon Steel	A 105
Cotter Pin	Stainless Steel	A276 Type 304
Crane Coupling	Carbon Steel	A53 Type S Grade B

DIMENSIONS DATA FOR LANSDALE ADJUSTABLE VERTICAL INDICATOR POST (In)						
SIZE	**4**	**6**	**8**	**10**	**12**	**14**
TURNS TO OPEN	13	20	26	33	39	45
H0	9.92	13.97	17.48	21.06	24.29	28.62

L= ADJUSTABLE BURY DEPTH RANGE							
L	**A**	**B**	**C**	**D**	**E**	**F**	**G**
MIN	18.25	36	57	78	99	120	148.5
MAX	39.5	60.5	81.5	102.5	123.5	144.5	168

PROJECT	APPROVAL STAMP
PROJECT:	☐ APPROVED
ADDRESS:	☐ APPROVED AS NOTED
ENGINEER:	☐ NOT APPROVED
SUBMITTAL DATA:	REMARKS:
NOTES 1:	
NOTES 2:	

FIELD SET TFM# 21689-A, 21689-B, 21689-C PROJECT# 2025-11-03-04

THESE PLANS AND SPECIFICATIONS ARE REQUIRED TO BE KEPT ON THE JOB SITE UNTIL A FINAL CERTIFICATE OF OCCUPANCY OR PROJECT COMPLETION FORM IS ISSUED BY THIS OFFICE.
No alterations, deletions, additions or modifications of any kind are allowed to this approved set without written permission of this office.
TENNESSEE STATE FIRE MARSHAL'S OFFICE

Revision: 6/2022

Central Pipe & Supply

PVF, UTILITY, FIRE PROTECTION
- FABRICATION -

PRE-ASSEMBLED FIRE DEPARTMENT CONNECTION

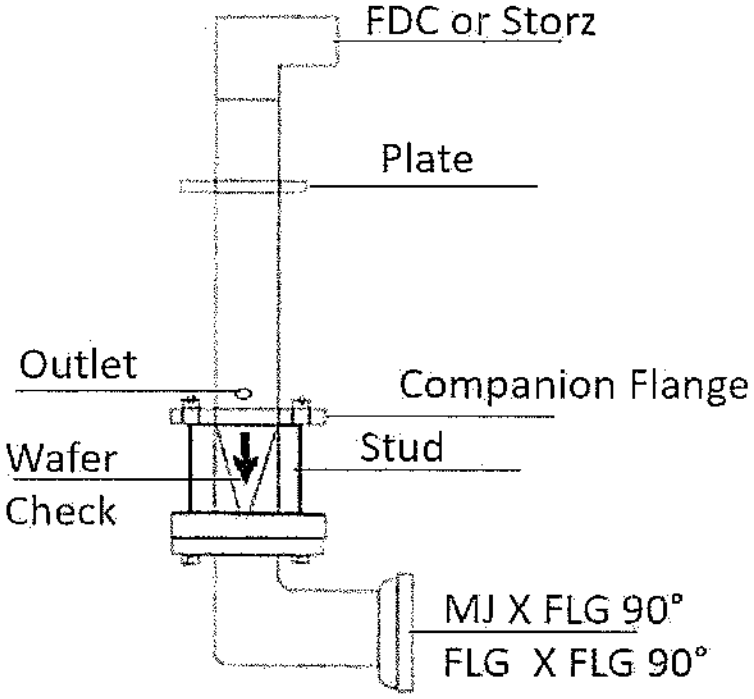

DESCRIPTION
4" PRE-ASSEMBLED FDC
6" PRE-ASSEMBLED FDC
4" PRE-ASSEMBLED STORZ
6" PRE-ASSEMBLED STORZ

Notes

FIELD SET TFM# 21689-A, 21689-B, 21689-C PROJECT# 2025-11-03-04

THESE PLANS AND SPECIFICATIONS ARE REQUIRED TO BE KEPT ON THE JOB SITE UNTIL A FINAL CERTIFICATE OF OCCUPANCY OR PROJECT COMPLETION FORM IS ISSUED BY THIS OFFICE.
No alterations, deletions, additions or modifications of any kind are allowed to this approved set without written permission of this office.
TENNESSEE STATE FIRE MARSHAL'S OFFICE

EFFECTIVE 4/4/2023

SIP Industries

Quality Manufacturers Since 1960

2” - 64” DUCTILE IRON MECHANICAL JOINT COMPACT FITTINGS

Submittal Information

Project Name / Location:	
Engineer:	
Referenced Specs:	
Distributor / Contractor:	

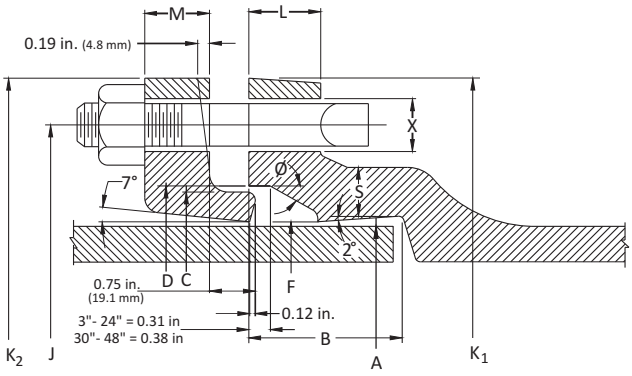

Optional Specifications

Coating:	☐	**Asphaltic Seal Coat** *In Accordance With ANSI/AWWA C104/A21.4*
	☐	**Fusion-Bonded Epoxy (FBE) Powder (Red Oxide Color)** *In Accordance With ANSI/AWWA C116/A21.16*
	☐	**Arc Zinc** *In Accordance with ISO 8179-1*
	☐	**Bare**
	☐	**Other - Specify:**
Lining:	☐	**Cement-Mortar** - *In Accordance With ANSI/AWWA C104/A21.4* ☐ **Single Lined** ☐ **Double Lined** ☐ **Asphalt Coating** ☐ **No Asphalt Coating**
	☐	**Fusion-Bonded Epoxy (FBE) Powder (Red Oxide Color)** *In Accordance With ANSI/AWWA C116/A21.16*
	☐	**Ceramic Epoxy**
	☐	**Bare**
	☐	**Other - Specify:**
Bolts / Nuts:	☐	Standard **High Strength Low Alloy Steel (HSLA)** *In Accordance With ANSI/AWWA C111/A21.11*
	☐	**Stainless Steel:** ☐ **Type 304** ☐ **Type 316**
	☐	**Other - Specify:**
Gaskets:	☐	**Standard SBR (Buna-S)** *In Accordance With ANSI/AWWA C111/A21.11*
	☐	**Other - Specify:**

General Specifications

Material : Ductile Iron per ASTM A536

Pressure : 350 PSI rating for 2"- 24"sizes, 250 PSI rating for 30" - 48" sizes and 150 PSI rating for 54" - 64" sizes

Testing : In accordance with ANSI/AWWA C153/A21.53 and UL, FM requirements

Laying Length : In accordance with ANSI/AWWA C153/A21.53
(*fittings not listed in ANSI/AWWA have dimensions per SIP design as noted in the catalog*)

Deflection : 2"- 4"= 8° | 6"= 7° | 8"-12"= 5° | 14"-16"= 3 ½° | 18"-24"= 3° | 30"-64"= 2°

Flanges : Flanged ends on fittings match ANSI/AWWA C115/A21.15 and ANSI B16.1 class 125 flanges

Weight : Are in pounds, unless noted otherwise and do not include accessories, cement lining and coating

Dimensions : MJ Bell dimensions meet ANSI/AWWA C111/A21.11 specification. All dimensions are in inches unless noted otherwise.

Installations : Per ANSI/AWWA C600 and C111

Approvals : 3" - 24" UL Listed | 3" - 24" FM Approved | 3" and higher UL/NSF 61 | 2" and higher NSF/ANSI 61 & 372
Please consult SIP for detail listing and approvals.

Technical Specifications

Select Size	Size	A	B	C	D	F	J	K_1	K_2	M	S	L	Ø	X	Bolt No.	Bolt Size	Bolt Length
☐	*2	2.50	2.50	3.39	3.50	2.61	4.75	6.19	6.25	0.62	0.36	0.58	28°	¾	2	⅝	3
☐	3	3.96	2.50	4.84	4.94	4.06	6.19	7.62	7.69	0.62	0.39	0.58	28°	¾	4	⅝	3
☐	4	4.80	2.50	5.92	6.02	4.90	7.50	9.06	9.12	0.75	0.39	0.60	28°	⅞	4	¾	3 ½
☐	6	6.90	2.50	8.02	8.12	7.00	9.50	11.06	11.12	0.88	0.43	0.63	28°	⅞	6	¾	3 ½
☐	8	9.05	2.50	10.17	10.27	9.15	11.75	13.31	13.37	1.00	0.45	0.66	28°	⅞	6	¾	3 ½
☐	10	11.10	2.50	12.22	12.34	11.20	14.00	15.62	15.62	1.00	0.47	0.70	28°	⅞	8	¾	3 ½
☐	12	13.20	2.50	14.32	14.44	13.30	16.25	17.88	17.88	1.00	0.49	0.73	28°	⅞	8	¾	3 ½
☐	14	15.30	3.50	16.40	16.54	15.44	18.75	20.25	20.25	1.25	0.55	0.79	28°	⅞	10	¾	4
☐	16	17.40	3.50	18.50	18.64	17.54	21.00	22.50	22.50	1.31	0.58	0.85	28°	⅞	12	¾	4
☐	18	19.50	3.50	20.60	20.74	19.64	23.25	24.83	24.75	1.38	0.68	1.00	28°	⅞	12	¾	4
☐	20	21.60	3.50	22.70	22.84	21.74	25.50	27.08	27.00	1.44	0.69	1.02	28°	⅞	14	¾	4
☐	24	25.80	3.50	26.90	27.04	25.94	30.00	31.58	31.50	1.56	0.75	1.02	28°	⅞	16	¾	4 ½
☐	30	32.00	4.00	33.29	33.46	32.17	36.88	39.12	39.12	2.00	0.82	1.31	20°	1 ⅛	20	1	5 ½
☐	36	38.30	4.00	39.59	39.76	38.47	43.75	46.00	46.00	2.00	1.00	1.45	20°	1 ⅛	24	1	5 ½
☐	42	44.50	4.00	45.79	45.96	44.67	50.62	53.12	53.12	2.00	1.25	1.45	20°	1 ⅜	28	1 ¼	6
☐	48	50.80	4.00	52.09	52.26	50.97	57.50	60.00	60.00	2.00	1.35	1.45	20°	1 ⅜	32	1 ¼	6
☐	54	57.56	4.00	58.82	59.02	57.73	63.20	65.70	65.70	2.00	1.45	1.55	20°	1 ⅜	36	1 ¼	6 ½
☐	60	61.61	4.00	62.87	63.07	61.78	67.72	70.22	70.22	2.00	1.50	1.75	20°	1 ⅜	36	1 ¼	6 ½
☐	64	65.67	4.00	66.96	67.13	65.84	71.86	74.36	74.36	2.00	1.50	1.75	20°	1 ⅜	38	1 ¼	6 ½

* *Not Included In AWWA C1po*

Please refer to our web page www.sipindustries.com for up to date product data and technical advisories

V 0524-01

8876 Gulf Freeway - Suite 500 - Houston, TX 77017 | Phone: 713-923-6111 | Fax: 713-923-6114 | www.sipindustries.com | sales@sipindustries.com

SIP Industries

Quality Manufacturers Since 1960

EZ GRIP®
EZD

3” - 48” MECHANICAL JOINT RESTRAINT FOR DUCTILE IRON PIPE

Submittal Information

Project Name / Location:	
Engineer:	
Referenced Specs:	
Distributor / Contractor:	



Optional Specifications

Coating:	☐	**EnviroShield, Direct To Metal (DTM) Alkyd Enamel (Black)**
	☐	**EZ-Shield® Polyester Based Powder Coating (Black)**
	☐	**Other - Specify:**
Bolts / Nuts:	☐	Standard **High Strength Low Alloy Steel (HSLA)** *In Accordance With ANSI/AWWA C111/A21.11* ☐ **Fluoropolymer Corrosion Resistant Coating**
	☐	**Stainless Steel:** ☐ **Type 304** ☐ **Type 316**
	☐	**Other - Specify:**
Gaskets:	☐	**Standard SBR (Buna-S)** *In Accordance With ANSI/AWWA C111/A21.11*
	☐	**Other - Specify:**

General Specifications

Material : Gland, Heat Treated wedges, twist-off nuts and actuating screws are Ductile Iron per ASTM A536

Pressure : Grade 65-45-12 350 PSI rating for 4"- 16"sizes, 250 PSI for sizes 18" and larger

Dimensions : Gland complies with all applicable dimensions of, and is compatible with, all mechanical joint sockets of ANSI/AWWA C111/A21.11, C110/A21.10, and C153/A21.53 Standards.

Installation : Install in accordance with SIP installation procedures and intent of AWWA C600 / M41.
Pipe ends must be free from defects to allow wedges to properly engage the pipe ends.
Wedge pockets must be free from debris intrusion to allow movement, polyethylene wrap of the restraint is recommended as a prevention.

Per ANSI/AWWA C600 and C111 using DIP conforming to C150/C151, and Steel Pipe 3"-12"

*Steel Pipe applications require use of a Transition Gasket

*Sizes 42" and larger require longer T-Bolts for proper installation

***Not for use on Spigot End of M.J. x P.E. Fittings or on P.E. x P.E. Fittings**

***Wedges are heat treated, 370 to 470 BHN hardness range**

* **If pipe hardness is over 230 BHN, do not install and contact SIP for further assistance**

Note: No additional tool required for installation other than the tool required to install a standard Mechanical Joint T-Bolt and 1-1/4” Nut. The hex head of the actuating screw is designed to break off at a preset torque. After the removal of the 1-1/4” torque control hex head, a 5/8” hex head on the actuating screw remains in order to allow, if necessary, for the disassembly and re-installation of the gland and restraint mechanism

FM APPROVED

UL LISTED

Deflection : 5° on sizes 3” - 12”, 3° on 14”-24”, 2° on 30”-36” and 1° on 42”- 48”

Coating : Wedges, twist-off nuts and actuating screws Fluoropolymer coated

Approvals : Sizes 3" - 24" UL Listed and sizes 3" - 12" FM Approved

Supporting documentation for the above 'General Specifications' and 'Optional Specifications' are available upon request to review, in addition to Installation Instructions and any requested material samples

Please contact SIP for technical assistance of nonstandard applications and pressures

Please refer to our web page www.sipindustries.com for up to date product data and technical advisories

8876 Gulf Freeway - Suite 500 - Houston, TX 77017 | Phone: 713-923-6111 | Fax: 713-923-6114 | www.sipindustries.com | sales@sipindustries.com

3” - 48” MECHANICAL JOINT RESTRAINT FOR DUCTILE IRON PIPE

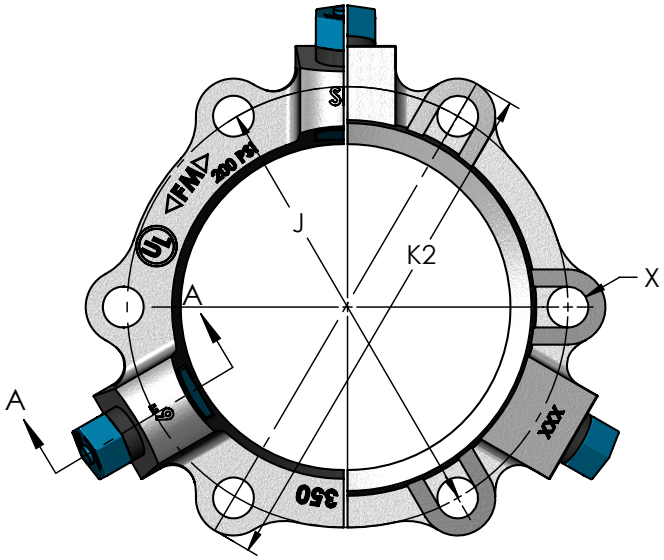

TOP BOTTOM

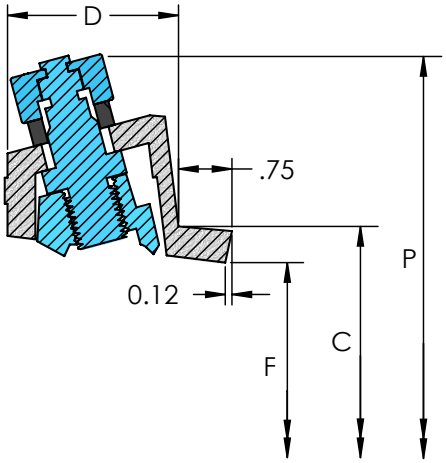

SECTION A-A

Technical Specifications

Select Size	Size	Series Number	C	D	F	J	X	P	K2	Bolt Qty	Wedge Qty	Approx. Weight (Lbs)
☐	3	EZD03	4.84	2.43	4.06	6.19	¾	10.00	7.69	4	2	6.38
☐	4	EZD04	5.92	2.46	4.90	7.50	⅞	11.00	9.12	4	2	7.88
☐	6	EZD06	8.02	2.46	7.00	9.50	⅞	13.14	11.12	6	3	11.57
☐	8	EZD08	10.17	2.46	9.15	11.75	⅞	15.30	13.39	6	4	15.91
☐	10	EZD10	12.22	2.46	11.20	14.00	⅞	17.30	15.62	8	6	22.34
☐	12	EZD12	14.32	2.46	13.30	16.25	⅞	19.45	17.89	8	8	29.82
☐	14	EZD14	16.40	2.98	15.44	18.75	⅞	21.45	20.80	10	10	49.90
☐	16	EZD16	18.50	2.84	17.54	21.00	⅞	24.20	22.50	12	12	58.02
☐	18	EZD18	20.60	2.95	19.64	23.25	⅞	26.00	25.25	12	12	68.52
☐	20	EZD20	22.70	2.91	21.74	25.50	⅞	28.20	27.50	14	14	75.94
☐	24	EZD24	26.90	3.20	25.94	30.00	⅞	33.50	31.87	16	16	126.18
☐	30	EZD30	33.29	3.50	32.17	36.88	1 ⅛	39.80	39.12	20	20	196.6
☐	36	EZD36	39.59	3.50	38.47	43.75	1 ⅛	46.10	46.00	24	24	243.52
☐	42	EZD42	45.79	5.18	44.67	50.62	1 ⅜	54.50	53.12	28	28	441.96
☐	48	EZD48	52.09	5.18	50.97	57.50	1 ⅜	60.80	60.00	32	32	522.24

All dimensions are in inches unless noted otherwise. All weights are approximate in pounds unless noted otherwise.

SIP Industries

Quality Manufacturers Since 1960

EZ GRIP®
EZPVC

3” - 36” MECHANICAL JOINT RESTRAINT FOR PVC PIPE

Submittal Information

Project Name / Location:	
Engineer:	
Referenced Specs:	
Distributor / Contractor:	

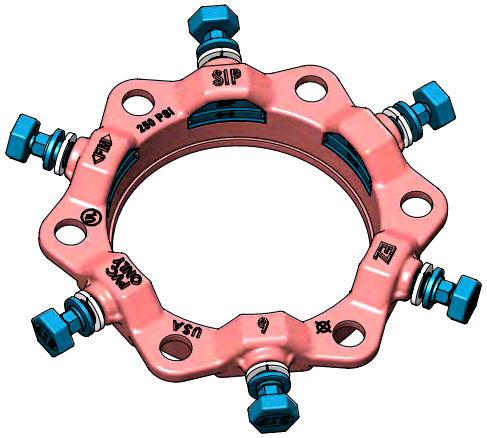

Optional Specifications

Coating:	☐	**EnviroShield, Direct To Metal (DTM) Alkyd Enamel (Red)**
	☐	**EZ-Shield® Polyester Based Powder Coating (Red)**
	☐	**Other - Specify:**
Bolts / Nuts:	☐	Standard **High Strength Low Alloy Steel (HSLA)** *In Accordance With ANSI/AWWA C111/A21.11* ☐ **Fluoropolymer Corrosion Resistant Coating**
	☐	**Stainless Steel:** ☐ **Type 304** ☐ **Type 316**
	☐	**Other - Specify:**
Gaskets:	☐	**Standard SBR (Buna-S)** *In Accordance With ANSI/AWWA C111/A21.11*
	☐	**Other - Specify:**

General Specifications

FM APPROVED

UL LISTED

Material : Gland, wedges, twist-off nuts and actuating screws are Ductile Iron per ASTM A536, Grade 65-45-12

Pressure : Pressure rating equal to that of the PVC pipe rating, with a minimum 2:1 safety factor.
The contoured grip of the wedges increases as the hydrostatic pressure increases

Dimensions : Gland complies with all applicable dimensions of, and is compatible with, all mechanical joint sockets of ANSI/AWWA C111/A21.11, C110/A21.10, and C153/A21.53 Standards.
Compatable with 4” - 36” AWWA C900 (PVC), C906 (HDPE)*, C909 (PVCO) or 3”-12” ASTM D2241 IPS PVC Pipe
*** AWWA C906 HDPE Pressure Pipes up to 12” by using internal pipe stiffeners.**
*** IPS PVC Pipe applications require use of a Transition Gasket.**

Installations : Install in accordance with SIP installation procedures and intent of AWWA C600 / C605 / M23
Pipe ends must be free from defects to allow wedges to properly engage the pipe ends.
Wedge pockets must be free from debris intrusion to allow movement, polyethylene wrap of the restraint is recommended as a prevention.

Note: No additional tool required for installation other than the tool required to install a standard Mechanical Joint T-Bolt and 1-1/4” Nut. The hex head of the actuating screw is designed to break off at a preset torque. After the removal of the 1-1/4” torque control hex head, a 5/8” hex head on the actuating screw remains in order to allow, if necessary, for the disassembly and re-installation of the gland and restraint mechanism

Deflection : 5° on sizes 3” - 12”, 3° on 14”-24”, 2° on 30”-36”

Coating : Wedges, twist-off nuts and actuating screws fluoropolymer coated

Approvals : UL Listed for sizes 4”-12” at 235psi on AWWA C900 Class 235 DR-18 PVC pipe. FM Approved for sizes 4”-12” at 250psi for AWWA C900 Class 305 DR-14 PVC pipe and at 200psi on AWWA C900 Class 235 DR-18 PVC pipe.
Tested and found In accordance with ASTM F1674 Standard for PVC

Supporting documentation for the above 'General Specifications' and 'Optional Specifications' are available upon request to review, in addition to Installation Instructions and any requested material samples

Please contact SIP for technical assistance of nonstandard applications

Please refer to our web page www.sipindustries.com for up to date product data and technical advisories

V 0524-01

8876 Gulf Freeway - Suite 500 - Houston, TX 77017 | Phone: 713-923-6111 | Fax: 713-923-6114 | www.sipindustries.com | sales@sipindustries.com

3” - 36” MECHANICAL JOINT RESTRAINT FOR PVC PIPE

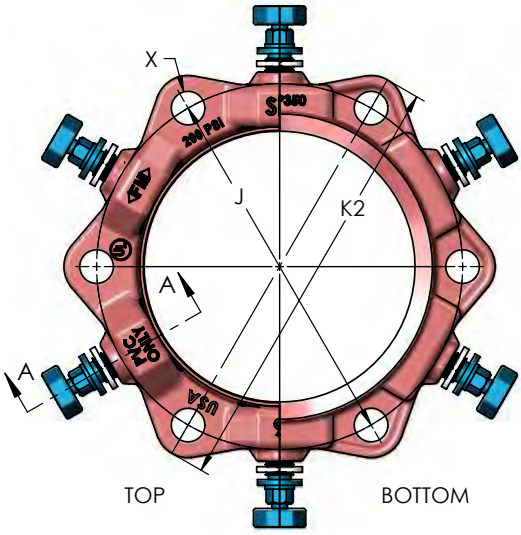

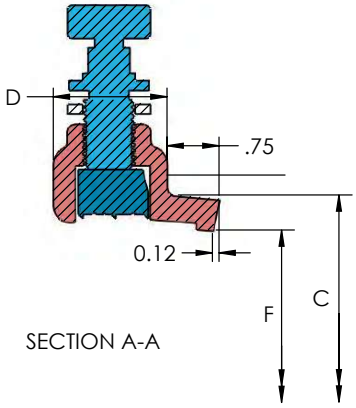

Technical Specifications

Select Size	Size	Series Number	C	D	F	X	J	K2	Bolt Qty	Wedge Qty	Approx. Weight (Lbs)
☐	3	EZPVC03	4.84	1.60	4.06	¾	6.19	7.96	4	4	7.50
☐	4	EZPVC04	5.92	1.76	4.90	⅞	7.50	9.16	4	4	7.75
☐	6	EZPVC06	8.02	1.75	7.00	⅞	9.50	11.12	6	6	11.40
☐	8	EZPVC08	10.17	2.26	9.15	⅞	11.75	13.75	6	6	16.49
☐	10	EZPVC10	12.22	2.32	11.20	⅞	14.00	15.91	8	8	22.10
☐	12	EZPVC12	14.32	2.39	13.30	⅞	16.25	18.23	8	8	29.63
☐	14	EZPVC14	16.40	2.29	15.44	⅞	18.75	20.75	10	10	48.70
☐	16	EZPVC16	18.50	2.38	17.54	⅞	21.00	23.13	12	12	57.25
☐	18	EZPVC18	20.60	2.39	19.64	⅞	23.25	25.25	12	12	61.45
☐	20	EZPVC20	22.70	2.41	21.74	⅞	25.50	27.50	14	14	75.68
☐	24	EZPVC24	26.90	2.50	25.94	⅞	30.00	32.13	16	16	92.92
☐	30	EZPVC30	33.29	3.45	32.17	1 ⅛	36.88	39.57	20	20	172.40
☐	36	EZPVC36	39.59	3.70	38.47	1 ⅛	43.75	46.34	24	24	218.88

All dimensions are in inches unless noted otherwise. All weights are approximate in pounds unless noted otherwise.

STANDARDIZED PRESSURE RATINGS

Size	CI O.D.								
	ANSI/AWWA C900								
	DR14	DR17	DR18	DR21	DR25	DR27.5	DR32.5	DR41	DR51
4	305	250	235	200	165	-	-	-	-
6	305	250	235	200	165	-	-	-	-
8	305	250	235	200	165	-	-	-	-
10	305	250	235	200	165	-	-	-	-
12	305	250	235	200	165	-	-	-	-
14	305	250	235	200	165	150	125	-	-
16	305	250	235	200	165	150	125	-	-
18	250	250	235	200	165	150	125	-	-
20	250	250	235	200	165	150	125	-	-
24	250	250	235	200	165	150	125	-	-
30	-	-	225	200	165	150	125	100	80
36	-	-	-	200	165	150	125	100	80

STANDARDIZED PRESSURE RATINGS

Size	CI O.D.							
	ANSI/AWWA C909 PVCO		AWWA C906 (HDPE*)					
	PC235	PC165	DR7.3	DR9	DR9.3	DR11	DR13.5	DR17
4	235	-	254	200	193	160	130	100
6	235	-	254	200	193	160	130	100
8	235	-	254	200	193	160	130	100
10	235	-	254	200	193	160	130	100
12	235	-	254	200	193	160	130	100
14	235	-	254	200	193	160	130	100
16	235	165	-	200	193	160	-	-
18	200	-	-	-	-	160	-	-
20	-	-	-	-	-	160	-	-

STANDARDIZED PRESSURE RATINGS

Size	IPS O.D.								
	ASTM D2241			AWWA C901 & AWWA C906 (HDPE*)					
	SDR17	SDR21	SDR26	DR7.3	DR9	DR9.3	DR11	DR13.5	DR17
3	250	200	160	254	200	193	160	130	100
4	250	200	160	254	200	193	160	130	100
6	250	200	160	254	200	193	160	130	100
8	250	200	160	254	200	193	160	130	100
10	250	200	160	254	200	193	160	130	100
12	250	200	160	254	200	193	160	130	100

** AWWA C906 HDPE Pressure Pipes up to 12” by using internal pipe stiffeners. Contact SIP for further assistance.*

Municipal

PRODUCT SPECIFICATION

AQUASPRING™ C900 IB PVC PIPE

Gasketed Integral Bell

Our AquaSpring™ C900 Gasketed Integral Bell PVC Pipe product line is manufactured to meet the needs of modern municipal water, wastewater, and reclaimed water systems. With top quality raw materials and modern processing technology, AquaSpring C900 pipe meets all industry standards in addition to our own rigorous quality control requirements.

AquaSpring C900 pipe utilizes Rieber style gaskets throughout the entire product offering to create a leak-free joint.

Short Form Specification		
Pipe Standard:	AWWA C900-22	
Diameter Std.:	Cast Iron Outside Diameter (CIOD)	
Nominal Sizes:	4", 6", 8", 10", 12", 14", 16", 18", 20", 24", 30", 36"	
Dimension Ratios & Pressure Ratings	DR 51 – 80 psi DR 41 – 100 psi DR 32.5 – 125 psi DR 25 – 165 psi DR 21 – 200 psi	DR 18 – 235 psi (185 psi)** DR 14 – 305 psi (250 psi)**
Lay Length:	20' [6.1m] 14' (contact local representative on availability, pipe not hydrotested at 14' lengths)	
Pipe Compound:	ASTM D1784 Cell Class 12454	
Pipe Joint Std.:	ASTM D3139	
Max. Angular Joint Deflection:‡	1°	
Gasket Standard:	ASTM F477, UL 157	
Gasket Material Offerings:	Standard – SBR Optional – NBR or EPDM	
Installation Std.:	AWWA C605	

Applications	Potable Water	Wastewater	Reclaimed Water
Color:	Blue	Green	Purple
Certifications:*	NSF 14, NSF 61 CSA B137.3* UL 1285 FM 1612** BNQ 3624-250 (24in)*, BNQ 3660-950 (24in)	CSA B137.3*	CSA B137.3*

Only products bearing the NSF Mark are Certified

**See Certification Letter for full explanation and list of exceptions.*
***FM 1612 calculates pressure ratings differently than AWWA for 4"-12" only with DR 18 as 185 psi and DR 14 as 250 psi.*
‡See Installation Guide for more information.





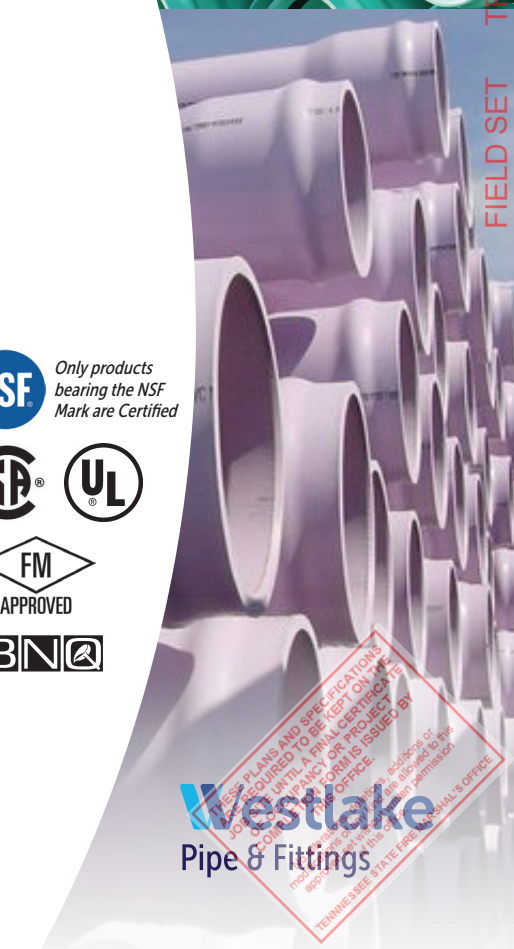

TFM# 21689-A, 21689-B, 21689-C PROJECT# 2025-11-03-04
FIELD SET

www.westlakepipe.com

©2024 Westlake Pipe & Fittings All rights reserved MU-PS-001-US-EN-0924.1

Westlake Pipe & Fittings

PRODUCT SPECIFICATION

AQUASPRING™ C900 IB PVC PIPE

Gasketed Integral Bell

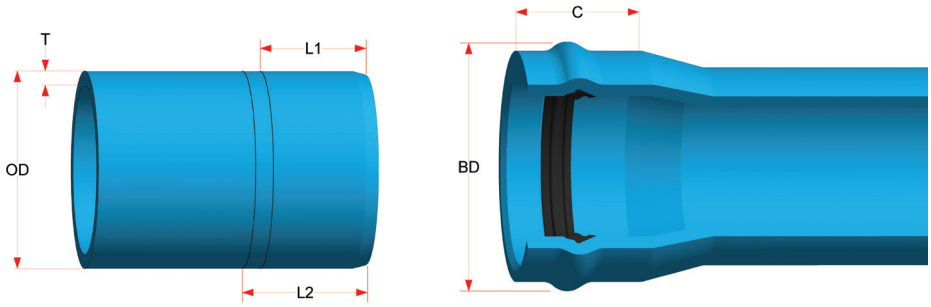

AQUASPRING™ C900 IB PIPE DIMENSIONS & PERFORMANCE									
Nom. Size	Outside Diameter (OD)	DR	Pressure Class psi [kPa]	Min. Wall Thickness (T)	Internal Diameter (ID)	Approx. Bell Diameter (BD)	Bell Depth (C)	1st Insertion Mark (L1)	2nd Insertion Mark (L2)
4" [100mm]	4.800 [121.9]	25	165 [1150]	0.192 [4.88]	4.416 [112.1]	6.250 [158.8]	5.000 [127]	3.375 [85.7]	4.375 [111.1]
		18	235 [1620]	0.267 [6.78]	4.266 [108.3]				
		14	305 [2130]	0.343 [8.70]	4.114 [104.5]				
6" [150mm]	6.900 [175.3]	25	165 [1150]	0.276 [7.00]	6.348 [161.3]	8.625 [219.1]	5.750 [146.1]	4.625 [117.5]	5.625 [135.3]
		18	235 [1620]	0.383 [9.72]	6.134 [155.9]				
		14	305 [2130]	0.493 [12.50]	5.914 [150.3]				
8" [200mm]	9.050 [229.9]	25	165 [1150]	0.362 [9.20]	8.326 [211.5]	11.500 [292.1]	7.000 [177.8]	5.625 [135.3]	6.625 [168.3]
		18	235 [1620]	0.503 [12.80]	8.044 [204.3]				
		14	305 [2130]	0.646 [16.40]	7.758 [197.1]				
10" [250mm]	11.100 [281.9]	25	165 [1150]	0.444 [11.30]	10.212 [259.3]	14.000 [355.6]	7.250 [184.2]	6.125 [155.6]	7.125 [181.0]
		18	235 [1620]	0.617 [15.70]	9.866 [250.3]				
		14	305 [2130]	0.793 [20.10]	9.514 [241.7]				
12" [300mm]	13.200 [335.3]	25	165 [1150]	0.528 [13.40]	12.144 [308.5]	16.563 [420.7]	8.000 [203.2]	6.875 [174.6]	7.875 [200]
		18	235 [1620]	0.733 [18.60]	11.734 [298.1]				
		14	305 [2130]	0.943 [23.90]	11.314 [287.5]				
14" [350mm]	15.300 [388.6]	32.5	125 [860]	0.471 [12.0]	14.358 [364.7]	19.063 [484.2]	9.000 [228.6]	7.500 [190.5]	8.500 [215.9]
		25	165 [1150]	0.612 [15.6]	14.076 [357.5]				
		21	200	0.729	13.842				
		18	235 [1620]	0.850 [21.6]	13.600 [345.4]				
		14	305	1.093	13.114				
16" [400mm]	17.400 [442.0]	41	100	0.424	16.552	21.750 [552.5]	10.000 [254.0]	8.500 [215.9]	9.500 [241.3]
		32.5	125 [860]	0.535 [13.6]	16.330 [414.8]				
		25	165 [1150]	0.696 [17.7]	16.008 [406.6]				
		21	200	0.829	15.742				
		18	235 [1620]	0.967 [24.6]	15.466 [392.8]				
		14	305	1.243	14.914				

FIELD SET TFM# 21689-A, 21689-B, 21689-C PROJECT# 2025-11-03-04

PLANS AND SPECIFICATIONS REQUIRED TO BE KEPT ON THE JOB UNTIL A FINAL CERTIFICATE OF COMPLIANCY OR PROJECT FORM IS ISSUED BY THE OFFICE.
TENNESSEE STATE FIRE MARSHAL'S OFFICE

©2024 Westlake Pipe & Fittings All rights reserved MU-PS-001-US-EN-0924.1

Westlake Pipe & Fittings

PRODUCT SPECIFICATION

AquaSpring™ C900 IB PVC PIPE

Gasketed Integral Bell

AquaSpring™ C900 IB PIPE DIMENSIONS & PERFORMANCE									
Nom. Size	Outside Diameter (OD)	DR	Pressure Class psi [kPa]	Min. Wall Thickness (T)	Internal Diameter (ID)	Approx. Bell Diameter (BD)	Bell Depth (C)	1st Insertion Mark (L1)	2nd Insertion Mark (L2)
18" [450mm]	19.500 [459.3]	41	100	0.476	18.548	23.563 [598.5]	10.375 [263.5]	8.875 [225.4]	9.875 [250.8]
		32.5	125 [860]	0.600 [15.2]	18.300 [464.8]				
		25	165 [1150]	0.780 [19.8]	17.940 [455.7]				
		21	200	0.929	17.642				
		18	235 [1620]	1.083 [27.5]	17.334 [440.3]				
20" [500mm]	21.600 [548.6]	32.5	125 [860]	0.665 [16.9]	20.270 [514.9]	26.063 [662.0]	11.000 [279.4]	9.500 [241.3]	10.500 [266.7]
		25	165 [1150]	0.864 [22.0]	19.872 [504.7]				
		21	200	1.029	19.542				
		18	235 [1620]	1.200 [30.5]	19.200 [487.7]				
24" [600mm]	25.800 [655.3]	41	100	0.629	24.542	31.063 [789.0]	13.000 [330.2]	11.500 [292.1]	12.500 [317.5]
		32.5	125 [860]	0.794 [20.2]	24.212 [615.0]				
		25	165 [1150]	1.032 [26.2]	23.736 [602.9]				
		21	200	1.229	23.342				
		18	235 [1620]	1.433 [36.4]	22.934 [582.5]				
30" [750mm]	32.000 [812.8]	51	80 [550]	0.627 [15.90]	30.746 [781]	37.500 [952.5]	15.125 [384.2]	13.625 [346.1]	14.625 [371.5]
		41	100 [650]	0.780 [19.80]	30.440 [773.2]				
		32.5	125 [860]	0.985 [25.00]	30.030 [762.8]				
		25	165 [1150]	1.280 [32.50]	29.440 [747.8]				
		21	200	1.524	28.952				
		18	235 [1620]	1.778 [45.20]	28.444 [722.4]				
36" [900mm]	38.300 [972.8]	51	80 [550]	0.751 [19.10]	36.798 [934.6]	44.500 [1130.3]	19.125 [485.8]	17.625 [447.7]	18.625 [473.1]
		41	100 [650]	0.934 [23.70]	36.432 [925.4]				
		32.5	125 [860]	1.178 [29.90]	35.944 [913.0]				
		25	165 [1150]	1.532 [38.90]	35.236 [895.0]				
		21	200	1.824	34.652				

Notes:
1. These dimensions are for estimating purposes only. All dimensions not in brackets are in inches unless otherwise specified.
2. Products certified to CSA B137.3 have dimensions in brackets in millimeters unless otherwise specified.
3. DR = Dimension Ratio
4. AWWA and CSA Pressure Class @ 73°F [23°C] which includes a 2:1 safety factor.
5. Internal diameter calculated using nominal outside diameter and minimum wall thickness.
6. Dimension given for Approx. Bell Diameter (BD) is for highest pressure class.

FIELD SET TFM# 21689-A, 21689-B, 21689-C PROJECT# 2025-11-03-04

THESE PLANS AND SPECIFICATIONS ARE REQUIRED TO BE KEPT ON THE JOB UNTIL A FINAL CERTIFICATE OF COMPLIANCY OR PROJECT FORM IS ISSUED BY THE OFFICE. Modifications, additions or modifications are allowed to this approval set without written permission. TENNESSEE STATE FIRE MARSHAL'S OFFICE

©2024 Westlake Pipe & Fittings All rights reserved MU-PS-001-US-EN-0924.1

Westlake Pipe & Fittings

Engineering Specification

Job Name _____ Contractor _____

Job Location _____ Approval _____

Engineer _____ Contractor's P.O. No. _____

Approval _____ Representative _____

LEAD FREE*

Series IBR

In-Building Risers Customizable

Size: 4" – 12" 6"

Series IBR In-Building Risers are used to connect the main fire supply to the building overhead fire system. The fitting passes under the foundation without joints and extends up through the floor. Provided with installation tabs, the unit has a CIPS (Cast Iron Pipe Size) coupler for easy connection to the underground supply (AWWA C900 PVC and Ductile Iron Pipe) and industry standard grooved-end connection (AWWA C606) on the building side for easy connection to the overhead fire sprinkler system. The IBR features Lead Free* construction to comply with Lead Free* installation requirements. Note: 12" Risers are not 3rd Party Approved, please contact your local municipality for State Code and Installation requirements.

Ames In-Building Risers are precision engineered and manufactured to provide exceptional reliability and reduce installation time and labor costs associated with field assembly. In accordance with NFPA 24, the UL Listed and FM Approved In-Building Risers replace numerous fittings, elbows, and spools, and reduce the possibility of leaks or failure in comparison to traditional installation methods and materials. Factory tested integrity ensures the highest quality installation. The use of stainless steel significantly increases the reliability and life of the riser.

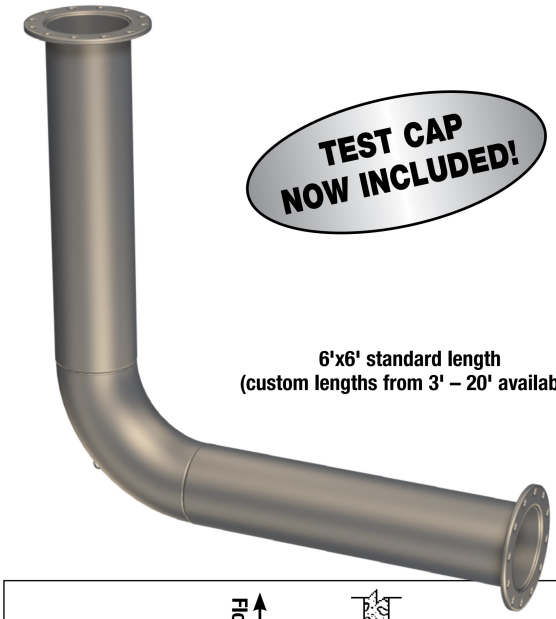

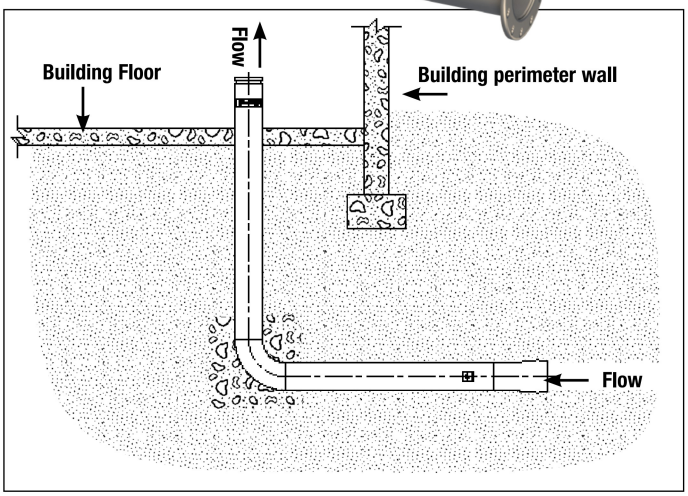

Features

- Cost savings
- Corrosion resistant stainless steel construction, Type 304
- Ease of installation and light weight allows one person to position and handle the riser
- Minimal site preparation; joint restraint one-piece construction reduces time and labor; no missing parts, no leaks; easily identifiable for approvals
- Includes Test Cap and Coupler
- UL Listed, FM Approved, NSF Certified
- Sizes: available 4" – 12" diameter in 6'x6' standard dimensions. Custom horizontal and vertical lengths available 3'-20'.
- 12" Risers are not 3rd Party Approved, please contact your local municipality for State Code and Installation requirements.
- Designed to meet NFPA 24
- AWWA C900 Inlet/DIP
- AWWA C606 Outlet
- NSF Approved for potable water supply

NOTICE

Inquire with governing authorities for local installation requirements.

*The wetted surface of this product contacted by consumable water contains less than 0.25% of lead by weight.

Ames Fire & Waterworks product specifications in U.S. customary units and metric are approximate and are provided for reference only. For precise measurements, please contact Ames Fire & Waterworks Technical Service. Ames Fire & Waterworks reserves the right to change or modify product design, construction, specifications, or materials without prior notice and without incurring any obligation to make such changes and modifications on Ames Fire & Waterworks products previously or subsequently sold.

AMES
FIRE & WATERWORKS
A WATTS Brand

FIELD SET TFM# 21689-A, 21689-B, 21689-C PROJECT# 2025-11-03-04

Specification

In-Building Riser shall be installed as indicated on the plans. Riser shall be composed of a single extended 90 degree fitting of fabricated ASTM A312 304 stainless steel tubing, maximum working pressure 200 psi (14 bar). The fitting shall have a grooved-end connection on the outlet (building) side and a CIPS coupler on the inlet (underground) side. The grooved end shall include a coupler and cap to facilitate testing of the underground piping. The In-Building Riser shall be an Ames Fire & Waterworks Series IBR.

Approvals

Fittings FM Class 1920
UL HKQA (4"-10")

Note: 12" Risers are not 3rd Party Approved, please contact your local municipality for State Code and Installation requirements.

Dimensions – Weights

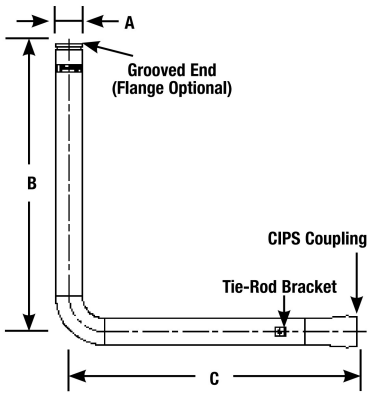

SIZE	DIMENSIONS						WEIGHT	
	A (OD)		B		C			
in.	in.	mm	ft	cm	ft	cm	lb	kg
4	4½	114	6	183	6	183	71	32
4	4½	114	8'-6"	183	6	183	85	39
4	4½	114	9	274	6	183	88	40
4	4½	114	5	152	7	213	71	32
6	6⅝	168	6	183	6	183	98	44
6	6⅝	168	8'-6"	259	6	183	122	56
6	6⅝	168	9	274	6	183	127	58
6	6⅝	168	5	152	7	213	98	44
8	8⅝	219	6	183	6	183	129	59
8	8⅝	219	8'-6"	259	6	183	163	74
8	8⅝	219	9	274	6	183	170	77
8	8⅝	219	5	152	7	213	129	59
10	10¾	273	6	183	6	183	202	92
10	10¾	273	9	274	6	183	258	117
10	10¾	273	5	152	7	213	202	92
12	12¾	324	6	183	6	183	329	149

**Each B (vertical) and C (horizontal) leg is customizable from 3' to 20' with UL Listed and FM Approved compliance. Consult with your factory representative for details.

Pipe

Meets AWWA C220

Standards

NFPA — Designed to allow the contractor to conform to NFPA 24.

Where a riser is close to building foundations, underground fittings of proper design and type shall be used to avoid pipe joints being located under the foundations.

End Connections

Horizontal End: Mates with Ductile Iron Pipe and AWWA C900 Pipe (PVC Pipe with Ductile Iron Pipe equivalent outside diameters).

Utilizes gasket conforming to UL 157 with "Lock in" gasket configuration.

SIZE	MATING PIPE OD	
in.	in.	mm
4	4.8	122
6	6.9	175
8	9.1	230
10	11.1	282

Vertical End

Meets AWWA C-606 dimensions for roll grooved pipe
Meets AWWA C-207 Class D for flanges.

Ratings

Meets AWWA C-900 pressure class 200, DR 14 Pipe.

Testing

Welds are 100% leak tested at the factory.

SIZE	DESIGN PROOF PRESSURE	
in.	psi	bar
4	1000	70
6	1000	70
8	800	56
10	800	56

NOTICE

The information contained herein is not intended to replace the full product installation and safety information available or the experience of a trained product installer. You are required to thoroughly read all installation instructions and product safety information before beginning the installation of this product.

FIELD SET TFM# 21689-A, 21689-B, 21689-C PROJECT# 2025-11-03-04

THESE PLANS AND SPECIFICATIONS HAVE BEEN APPROVED TO BE KEPT ON THE JOB SITE UNTIL FINAL CERTIFICATE OF OCCUPANCY OR PROJECT IS ISSUED BY THE STATE FIRE MARSHAL'S OFFICE. TENNESSEE STATE FIRE MARSHAL'S OFFICE

AMES FIRE & WATERWORKS

A WATTS Brand

USA: Backflow T: (978) 689-6066 • AmesFireWater.com
USA: Control Valves T: (713) 943-0688 • AmesFireWater.com
Canada: T: (888) 208-8927 • AmesFireWater.ca
Latin America: T: (52) 55-4122-0138 • AmesFireWater.com

© 2025 Watts